AGENDA
DEPARTMENT OF HEALTH
BOARD OF PHARMACY
COMPOUNDING RULES COMMITTEE

FEBRUARY 10, 2014

The Florida Hotel & Conference Center
1500 Sand Lake Road
Orlando, FL 32809
(407) 859-1500

Committee Members:
Michele Weizer, PharmD, Boca Raton, Chair
Debra Glass, BPharm, Tallahassee
Mark Mikhael, PharmD, Orlando

Board Staff:
Tammy Collins, Acting Executive Director
Christy Robinson, Program Operations Administrator
Jay Cumbie, Regulatory Specialist II

Board Counsel:
David Flynn, Assistant Attorney General

Participants in this public meeting should be aware that these proceedings are being recorded.

Monday, February 10, 2014 - 2:00p.m.

1. Rule 64B16-27.700 F.A.C.
2. Rule 64B16-27.797 F.A.C.
3. USP on Compounding
4. Rule 64B16-28.820 F.A.C.
5. The Drug Quality & Security Act (H.R. 3204)
6. Senate Bill 7008

64B16-27.700 Definition of Compounding.

"Compounding" is the professional act by a pharmacist or other practitioner authorized by law, employing the science or art of any branch of the profession of pharmacy, incorporating ingredients to create a finished product for dispensing to a patient or for administration by a practitioner or the practitioner's agent; and shall specifically include the professional act of preparing a unique finished product containing any ingredient or device defined by Sections 465.003(7) and (8), F.S. The term also includes the preparation of nuclear pharmaceuticals and diagnostic kits incident to use of such nuclear pharmaceuticals. The term "commercially available products," as used in this section, means any medicinal product as defined by Sections 465.003(7) and (8), F.S., that are legally distributed in the State of Florida by a drug manufacturer or wholesaler.

(1) Compounding includes:

(a) The preparation of drugs or devices in anticipation of prescriptions based on routine, regularly observed prescribing patterns.

(b) The preparation pursuant to a prescription of drugs or devices which are not commercially available.

(c) The preparation of commercially available products from bulk when the prescribing practitioner has prescribed the compounded product on a per prescription basis and the patient has been made aware that the compounded product will be prepared by the pharmacist. The reconstitution of commercially available products pursuant to the manufacturer's guidelines is permissible without notice to the practitioner.

(2) The preparation of drugs or devices for sale or transfer to pharmacies, practitioners, or entities for purposes of dispensing or distribution is not compounding and is not within the practice of the profession of pharmacy, except that the supply of patient specific compounded prescriptions to another pharmacy under the provisions of Section 465.0265, F.S., and Rule 64B16-28.450, F.A.C., is authorized.

(3) Office use compounding, "Office use" means the provision and administration of a compounded drug to a patient by a practitioner in the practitioner's office or by the practitioner in a health care facility or treatment setting, including a hospital, ambulatory surgical center, or pharmacy. A pharmacist may dispense and deliver a quantity of a compounded drug to a practitioner for office use by the practitioner in accordance with this section provided:

(a) The quantity of compounded drug does not exceed the amount a practitioner anticipates may be used in the practitioner's office before the expiration date of the drug;

(b) The quantity of compounded drug is reasonable considering the intended use of the compounded drug and the nature of the practitioner's practice;

(c) The quantity of compounded drug for any practitioner and all practitioners as a whole, is not greater than an amount the pharmacy is capable of compounding in compliance with pharmaceutical standards for identity, strength, quality, and purity of the compounded drug that are consistent with United States Pharmacopoeia guidelines and accreditation practices.

(d) The pharmacy and the practitioner enter into a written agreement. The agreement shall specifically provide:

1. That the compounded drug may only be administered to the patient and may not be dispensed to the patient or sold to any other person or entity;

2. That the practitioner shall include on the patient's chart, medication order, or medication administration record the lot number and the beyond-use-date of any compounded drug administered to the patient that was provided by the pharmacy;

3. That the practitioner will provide notification to the patient for the reporting of any adverse reaction or complaint in order to facilitate any recall of batches of compounded drugs.

(e) The pharmacy shall maintain readily retrievable records of all compounded drugs ordered by practitioners for office use. The records must be maintained for a minimum of four (4) years and shall include:

1. The name, address and phone number of the practitioner ordering the compounded drug for office use and the date of the order;

2. The name, strength, and quantity of the compounded drug provided, including the number of containers and quantity in each;

3. The date the drug was compounded;

4. The date the compounded drug was provided to the practitioner;

5. The lot number and beyond use date.

(f) The pharmacy shall affix a label to any compounded drug that is provided for office use. The label shall include:

1. The name, address, and phone number of the compounding pharmacy;

2. The name and strength of the preparation of a list of active ingredients and strengths;

3. The pharmacy's lot number and beyond-use-date;

4. The quantity or amount in the container;

5. The appropriate ancillary instructions such as storage instructions, cautionary statements, or hazardous drug warning labels were appropriate; and

6. The statement “For Institutional or Office Use Only – Not for Resale,” or if the drug is provided to a veterinarian the statement “Compounded Drug.”

Rulemaking Authority 465.005 FS. Law Implemented 465.003(12), 465.0155, 465.0265 FS. History–New 10-1-92, Formerly 21S-27.700, 61F10-27.700, 59X-27.700, Amended 11-2-03, 10-7-08, 3-21-13.

64B16-27.797 The Standards of Practice for Compounding Sterile Products.

The purpose of this section is to assure positive patient outcomes through the provision of standards for 1) pharmaceutical care; 2) the preparation, labeling, and distribution of sterile pharmaceuticals by pharmacies, pursuant to or in anticipation of a prescription drug order; and 3) product quality and characteristics. These standards are intended to apply to all sterile pharmaceuticals, notwithstanding the location of the patient (e.g., home, hospital, nursing home, hospice, doctor's office, or ambulatory infusion center).

(1) **Adoption of the United States Pharmacopiea:** Beginning on **[date to be determined],** all sterile compounding shall be performed in accordance with the minimum practice and quality standards of the following chapters of the United States Pharmacopeia (USP):

a. Chapter 797, Pharmaceutical Compounding-Sterile Preparations;

b. Chapter 1160, Pharmaceutical Calculations in Prescription Compounding;

c. Chapter 71, Sterility Tests;

d. Chapter 85, Bacterial Endotoxins Test;

e. Chapter 731, Loss on Drying; and

f. Chapter 1231, Water for Pharmaceutical Purposes.

All referenced chapters of the USP, in subsection (1) are specifically referring to the United States Pharmacopeia, 36th revision, Second Supplement, which is hereby incorporated and adopted by reference with the effective chapter dates of December 1, 2013. A copy of the USP chapters referenced in this rule may be examined and inspected, but not copied, at the office of the Board of Pharmacy in Tallahassee, Florida. A subscription to all relevant chapters is available for purchase at www.uspnf.com.

(2) **Minimum Standards:** The minimum practice and quality standards of the USP are adopted as the minimum standards to be followed when sterile products are compounded. However, nothing in this rule shall be construed to prevent the compounding of sterile products in accordance with standards that exceed the USP.

(3) **Current Good Manufacturing Practices**: The Board deems that this rule is complied with for any sterile products that are compounded in strict accordance with Federal Current Good Manufacturing Practices per 21 C.F.R. §§ 210.1 - 211.3.

DRAFT

(4) **Specific Exceptions to the United States Pharmacopeia**:

a. Although the USP requires the donning of gloves prior to entry into the clean-room, all required donning of gloves can be performed after entry into the clean-room to avoid contamination of the gloves from the door handle or access device leading into the clean-room.

b. Although the USP requires the use of sterile water as the first agent to be used in cleaning an ISO 5 or better environment, the environment may first be cleaned with any other agent, in lieu of sterile water, listed in Appendix II of Chapter 797, of the USP. This exception is an exception to the first step of cleaning the environment and does not create an exception to the additional cleaning steps required by the USP.

(5) **Additional Exceptions**: The Board encourages the use of a Petition for Rulemaking to inform the Board of a request to add an additional exception to subsection (5) of this rule. A Petition for Rulemaking is controlled by section 120.54(7), of the *Florida Statutes*.

(6) **Rule Conflicts**: On **[date to be determined],** this rule shall control notwithstanding any rule to the contrary located throughout the provision of Chapter 64B16, F.A.C. Upon the effective date of this rule, the board will begin the process of repealing all rules that conflict with this rule.

DRAFT

Accessed from 167.78.4.19 by James Cumbie (ocean22) on Mon Sep 09 15:04:23 EDT 2013

2013

USP COMPOUNDING

A Guide for the Compounding Practitioner

Current with *USP 36–NF 31*
through *Second Supplement*

U.S. PHARMACOPEIA
The Standard of Quality℠

Copyright (c) 2013 The United States Pharmacopeial Convention. All rights reserved.

Notice and Warning

This publication includes *General Notices and Requirements* and a number of General Chapters pertinent to pharmaceutical compounding, which appear as official text in *USP-NF.* The text of *General Notices and Requirements* and the text of the included General Chapters as they appear in *USP-NF* is determinative and should be referred to when specific questions arise.

Copyright © 2013
The United States Pharmacopeial Convention
12601 Twinbrook Parkway, Rockville, MD 20852
All rights reserved
ISBN 978-1-936424-21-4

No part of this publication may be reproduced, stored in a retrieval system, or transmitted in any form, or by any means including electronic, mechanical, photocopying, recording, or otherwise without the prior permission of USP. Authors and others wishing to use portions of the text should request permission to do so from the Secretary to the USP Board of Trustees, 12601 Twinbrook Parkway, Rockville, MD 20852.

Accessed from 167.78.4.19 by James Cumbie (ocean22) on Mon Sep 09 15:04:23 EDT 2013

Contents

Introduction

USP on Pharmaceutical Compounding Guidebook . . . 5

Section 1

Mission and Preface . . . 7
General Notices and Requirements . . . 15
Annotated List of Changes . . . 30

Section 2

⟨795⟩ Pharmaceutical Compounding—Nonsterile Preparations . . . 31
⟨797⟩ Pharmaceutical Compounding—Sterile Preparations . . . 39
⟨1160⟩ Pharmaceutical Calculations in Prescription Compounding . . . 79
⟨1163⟩ Quality Assurance in Pharmaceutical Compounding . . . 96
⟨1176⟩ Prescription Balances and Volumetric Apparatus . . . 101

Section 3

⟨1⟩ Injections . . . 105
⟨17⟩ Prescription Container Labeling . . . 110
⟨31⟩ Volumetric Apparatus . . . 112
⟨41⟩ Balances . . . 113
⟨51⟩ Antimicrobial Effectiveness Testing . . . 114
⟨61⟩ Microbiological Examination of Nonsterile Products: Microbial Enumeration Tests . . . 116
⟨62⟩ Microbiological Examination of Nonsterile Products: Tests for Specified Microorganisms . . . 122
⟨71⟩ Sterility Tests . . . 129
⟨85⟩ Bacterial Endotoxins Test . . . 136
⟨151⟩ Pyrogen Test . . . 141
⟨381⟩ Elastomeric Closures for Injections . . . 142
⟨601⟩ Aerosols, Nasal Sprays, Metered-Dose Inhalers, and Dry Powder Inhalers . . . 148
⟨621⟩ Chromatography . . . 173
⟨660⟩ Containers—Glass . . . 182
⟨661⟩ Containers—Plastics . . . 188
⟨671⟩ Containers—Performance Testing . . . 194
⟨681⟩ Repackaging into Single-Unit Containers and Unit-Dose Containers for Nonsterile Solid and Liquid Dosage Forms . . . 198
⟨698⟩ Deliverable Volume . . . 199
⟨699⟩ Density of Solids . . . 202
⟨721⟩ Distilling Range . . . 204
⟨731⟩ Loss on Drying . . . 205
⟨741⟩ Melting Range or Temperature . . . 205
⟨785⟩ Osmolality and Osmolarity . . . 207
⟨788⟩ Particulate Matter in Injections . . . 210
⟨791⟩ pH . . . 213

Copyright (c) 2013 The United States Pharmacopeial Convention. All rights reserved.

⟨811⟩ Powder Fineness 215
⟨823⟩ Positron Emission Tomography Drugs for Compounding, Investigational, and Research Uses 215
⟨831⟩ Refractive Index 223
⟨841⟩ Specific Gravity 224
⟨851⟩ Spectrophotometry and Light-Scattering 225
⟨911⟩ Viscosity—Capillary Viscometer Methods 232
⟨1035⟩ Biological Indicators for Sterilization 235
⟨1051⟩ Cleaning Glass Apparatus 239
⟨1072⟩ Disinfectants and Antiseptics 239
⟨1079⟩ Good Storage and Distribution Practices for Drug Products 244
⟨1111⟩ Microbiological Examination of Nonsterile Products: Acceptance Criteria for Pharmaceutical Preparations and Substances for Pharmaceutical Use 253
⟨1116⟩ Microbiological Control and Monitoring of Aseptic Processing Environments 254
⟨1136⟩ Packaging and Repackaging—Single-Unit Containers 266
⟨1146⟩ Packaging Practice Repackaging and Single Solid Oral Drug Product into a Unit-Dose Container 274
⟨1151⟩ Pharmaceutical Dosage Forms 280
⟨1177⟩ Good Packaging Practices 304
⟨1178⟩ Good Repackaging Practices 307
⟨1191⟩ Stability Considerations in Dispensing Practice 308
⟨1197⟩ Good Distribution Practices for Bulk Pharmaceutical Excipients 312
⟨1211⟩ Sterilization and Sterility Assurance of Compendial Articles 333
⟨1231⟩ Water for Pharmaceutical Purposes 337
⟨1251⟩ Weighing on an Analytical Balance 361
⟨1265⟩ Written Prescription Drug Information—Guidelines 366

Accessed from 167.78.4.19 by James Cumbie (ocean22) on Mon Sep 09 15:04:23 EDT 2013

Introduction

USP on Compounding—A Guide for the Compounding Practitioner

USP on Compounding—A Guide for the Compounding Practitioner (Guide) is intended to be a resource for the compounding practitioner. It contains selected official text from the *United States Pharmacopeia (USP)–National Formulary (NF)* which may be applicable to or useful for the practice of compounding. Official text that is reproduced in this *Guide* maintains the same legal status it has when published in the *USP–NF*.

The *USP–NF* is continuously revised, and the corresponding text in this *Guide* will be updated accordingly as revisions to the *USP–NF* become official. The text as it appears in the *USP–NF* is determinative and should be referred to if specific questions arise or there is any discrepancy between the text in this *Guide* and the text in the *USP–NF*.

Section 1

Section 1 contains the following prefatory sections from the *USP–NF*:

Mission and Preface

The *Mission and Preface* provides background information on the United States Pharmacopeial Convention (USP) and its standards-setting activities.

General Notices and Requirements

The *General Notices and Requirements* (*General Notices*) section presents the basic assumptions, definitions, and default conditions for the interpretation and application of the *USP–NF*. Requirements stated in *General Notices* apply to all general chapters unless specifically stated otherwise.

The following sections are of particular interest to compounding practitioners:

- 5.20.20.1 In Compounded Preparations
- 10. Preservation, Packaging, Storage, and Labeling
  - 10.20.20 Light-Resistant Container
  - 10.20.30 Well-Closed Container
  - 10.20.40 Tight Container
  - 10.20.60 Single-Use Container
  - 10.20.70 Single-Dose Container
  - 10.20.100 Multiple-Unit Container
  - 10.20.110 Multiple-Dose Container
  - 10.30 Storage Temperature and Humidity
  - 10.40.100 Expiration Date and Beyond-Use Date
  - 10.40.100.1 Compounded Preparations

Copyright (c) 2013 The United States Pharmacopeial Convention. All rights reserved.

Section 2—Compounding-Related General Chapters

Section 2 contains five compounding-related general chapters that provide standards and information on good compounding practices:

- *<795> Pharmaceutical Compounding—Nonsterile Preparations*
- *<797> Pharmaceutical Compounding—Sterile Preparations*
- *<1160> Pharmaceutical Calculations in Prescription Compounding*
- *<1163> Quality Assurance in Pharmaceutical Compounding*
- *<1176> Prescription Balances and Volumetric Apparatus*

Each general chapter is assigned a number that appears in angle brackets adjacent to the chapter name (e.g., *<797> Pharmaceutical Compounding—Sterile Preparations*). As stated in *General Notices*, general chapters numbered from 1000 to 1999 are considered interpretive and are intended to provide information on, give definition to, or describe a particular subject. They contain no mandatory requirements applicable to any official article unless specifically referenced in *General Notices*, a monograph, or a general chapter numbered below 1000.

Section 3—Supporting General Chapters

Section 3 contains 48 general chapters that are referenced in the compounding-related general chapters listed in Section 2. These can be accessed directly from the Table of Contents, bookmarks, or hyperlinked from the specific general chapter in which they are referenced.

Accessed from 167.78.4.19 by James Cumbie (ocean22) on Mon Sep 09 15:04:23 EDT 2013

Mission and Preface *USP 36–NF 31* and Supplements

This section provides background information on the United States Pharmacopeial Convention (USP), as well as general information about the 36th revision of the *United States Pharmacopeia* (*USP 36*) and the 31st edition of the *National Formulary* (*NF 31*) and its Supplements. Unless otherwise noted, the text in *USP 36–NF 31* is official May 1, 2013, the text in the *First Supplement* to *USP 36–NF 31* is official August 1, 2013, and the text in the *Second Supplement* to *USP 36–NF 31* is official December 1, 2013.

MISSION STATEMENT

USP–NF is published in continuing pursuit of the mission of USP: *To improve the health of people around the world through public standards and related programs that help ensure the quality, safety, and benefit of medicines and foods.*

HISTORY

On January 1, 1820, 11 physicians met in the Senate Chamber of the U.S. Capitol building to establish a pharmacopeia for the United States. These practitioners sought to create a compendium of the best and most fully established medicines, give them useful names, and provide recipes for their preparation. Nearly a year later, on December 15, 1820, the first edition of *The Pharmacopoeia of the United States* was published. Over time, the nature of the *United States Pharmacopeia (USP)* changed from being a compendium of recipes to a compendium of documentary standards for identity and quality that typically involve reference materials used as comparison standards in specified tests and assays. The publishing schedule of *USP* also changed over time. From 1820 to 1942, *USP* was published at 10-year intervals; from 1942 to 2000, at five-year intervals; and beginning in 2002, annually.

In 1888, the American Pharmaceutical Association published the first *National Formulary* under the title *The National Formulary of Unoficinal* [sic] *Preparations (NF).* Both *USP* and *NF* were recognized in the Federal Food and Drugs Act of 1906 and again in the Federal Food, Drug, and Cosmetic Act of 1938 (FD&C Act). In 1975, USP acquired the *National Formulary (NF)*, which now contains excipient standards that also call for reference materials. USP continues to develop *USP* and *NF*, through the work of the Council of Experts, into compendia that provide standards for articles based on advances in analytical and metrological science. As these and allied sciences evolve, so do *USP* and *NF*.

CONTENT OF *USP–NF*

USP–NF contains official substance (ingredient) and preparation (product) monographs for official articles recognized in *USP–NF*. The terms *official substance*, *official preparation*, and *official article* are defined in the *General Notices and Requirements* (*General Notices*). With few exceptions, all articles for which monographs are provided in *USP–NF* are legally marketed in the United States or are contained in legally marketed articles.

A *USP–NF* monograph for an official substance or preparation may consist of various components, including the article's name; definition; packaging, storage, and other requirements; and a specification. The specification consists of a series of universal tests (description, identity/identification, impurities, assay) and specific tests, one or more analytical procedures for each test, and acceptance criteria. Ingredients are defined as either drug substances or excipients. An excipient is any component, other than the active substance(s), intentionally added to the formulation of a dosage form. Excipients are not necessarily inert. Drug substances and excipients may be synthetic, semi-synthetic, drawn from nature (natural source), or manufactured using recombinant technology. Drugs that consist of larger molecules and mixtures requiring a potency test are usually referred to as biologicals or biotechnological articles.

General chapters provide frequently cited procedures, sometimes with acceptance criteria, in order to compile into one location repetitive information that appears in many monographs. New and revised monographs and general chapters and obsolete matter deleted from this edition are indicated in the *Admissions* section.

***USP–NF* Organization**—*USP–NF* is printed as a three-volume set. *Volume 1* includes front matter (*Mission and Preface, People,* Governance pages and websites, and *Admissions*/Annotations). It also includes *USP General Notices*, general chapters, dietary supplement general chapters, *Reagents, Reference Tables*, dietary supplement monographs, *NF Admissions*, *Excipients*, and *NF* monographs. *Volume 2* includes *USP* monographs A–I, and *Volume 3* includes *USP* monographs J–Z. To facilitate convenient use and reference, all three volumes include the full index, as well as the *USP General Notices* and the *Guide to General Chapters*. General chapters specific to dietary supplements are included in numerical order with the rest of the general chapters in *USP*. Excipient monographs usually

Copyright (c) 2013 The United States Pharmacopeial Convention. All rights reserved.

are presented in *NF* but also may appear in *USP* with suitable cross-referencing when they are also drug substances. The *Excipients* section (*Volume 1*) presents a tabulation of excipients by functional category.

Revisions to *USP–NF*—*USP–NF* is continuously revised. Revisions are presented annually as *Standard Revisions* in *USP–NF* and in twice-yearly *Supplements*, and as *Accelerated Revisions* on USP's website [*Errata, Interim Revision Announcements* (*IRA*s), and *Revision Bulletins*].

Standard Revisions—USP's Standard Revision Process calls for publication of a proposed revision in the *Pharmacopeial Forum (PF)* for a 90-day notice and comment period and, after the revision is approved by the relevant USP Expert Committee, publication in the next *USP–NF* or *Supplement*, as applicable.

Accelerated Revisions—The Accelerated Revision process is used to make revisions to *USP–NF* official more quickly than through USP's *Standard Revisions* process. Accelerated Revisions, which include *Errata, IRA*s, and *Revision Bulletins*, are posted on USP's website, do not always require notice and comment, and allow for a revision to become official prior to the next *USP–NF* or *Supplement*. See the *USP Guideline on Use of Accelerated Processes for Revisions to the USP–NF*, which is posted on USP's website.

Errata—An Erratum/Errata is content erroneously published in a USP publication that does not accurately reflect the intended official or effective requirements as approved by the Council of Experts. These typically are changes that do not have a broad impact on the standards. Errata are not subject to public comment and are communicated to the stakeholders by posting in the "New Official Text" section of USP's website. As of *USP 36–NF 31* errata will no longer be published in the *USP–NF* and *Supplement* print products. Errata become official on the first day of the month following their posting to the USP website. Errata are incorporated into the next available *USP–NF* or *Supplement* and are tagged when printed as described below.

Interim Revision Announcements (IRAs)—An *IRA* appears in *PF* first as a *Proposed Interim Revision Announcement* with a 90-day comment period. If there are no significant comments, the *IRA* becomes official in the "New Official Text" section of USP's website, with the official date indicated. *IRAs* are incorporated into the next available *USP–NF* or *Supplement*.

Revision Bulletins—If circumstances require rapid publication of official text, a revision or postponement may be published through a *Revision Bulletin. Revision Bulletins* are posted on USP's website with the official date indicated. *Revision Bulletins* are incorporated into the next available *USP–NF* or *Supplement*.

Pharmacopeial Forum (PF)—The *PF* is USP's official publication for public notice and comment. Proposals for revision are presented in the *In-Process Revision* or the *Proposed Interim Revision Announcement* (see above) sections and represent draft revisions that are expected to advance to official status pending final review and approval by the relevant Expert Committee.

On January 3, 2011, *PF* transitioned to an online-only publication that is available free of charge. The print version is no longer available. The new online-only *PF* includes proposed changes and additions to the *USP–NF*, including *Stage 4 Harmonization*, and *Stimuli* articles for which *USP* is seeking public comments. All proposals, including *IRAs*, will have a 90-day comment period. Other information that was contained in *PF*, including official text (final *IRAs*) is now published solely on USP's website or moved into other USP publications.

This change to make *PF* freely available will help facilitate open and public participation when revisions are proposed to the *USP–NF*.

Supplements—*Supplements* to *USP–NF* follow a standard schedule each year: the *First Supplement* is published in February and becomes official August 1. The *Second Supplement* is published in June and becomes official December 1. Users of USP print products must retain *Supplements* and check the "New Official Text" section of USP's website in order to have up-to-date official text. The *USP–NF* online version is updated with each *Supplement* or annual revision. Each time a new edition or *Supplement* is released during the subscription period, a new electronic version is issued. The *Index* in each *Supplement* is cumulative and includes citations to the annual revision and, for the *Second Supplement*, citations to the *First Supplement*. The contents of the two *Supplements* are integrated into the annual edition of the following year, along with new official revisions that have been adopted since the *Second Supplement* to the previous compendia.

USP–NF Spanish Edition—In 2006, USP began providing a Spanish edition of *USP–NF*. Maintenance of this edition follows the same revision approaches as the English edition.

USP Reference Standards—When approved for use as a comparison standard as a component of a USP monograph or other compendial procedure, use of USP Reference Standards promotes uniform quality of drugs and supports reliability and consistency by those performing compliance testing and other users of *USP–NF*, including manufacturers, buyers, and regulatory authorities. The *USP Catalog*, which lists the collection of USP Reference Standards, can be accessed on USP's website (www.usp.org). The listing identifies new items, replacement lots, lots of a single item that are simultaneously official, lots deleted from official status, and a preview of items eventually to be adopted. Purchase order information is included, and the names of distributors who can facilitate international availability of these items are suggested. This program benefits from the widespread voluntary contribution of suitable materials and test data from pharmaceutical manufacturers. USP advances this material via careful characterization studies and collaborative testing, followed by review and approval of the compendial use of the reference material by Expert Committees of the Council of Experts.

Symbols—Symbols identify the beginning and end of each revision, or nonharmonized text. The following table summarizes the types of symbols and the associated subscripts used in USP publications:

Accessed from 167.78.4.19 by James Cumbie (ocean22) on Mon Sep 09 15:04:23 EDT 2013

Revision Type	Symbol	Subscript
Interim Revision Announcement	●new text● (IRA 1-Jul-2013)	(IRA 1-Jul-2013)*
Revision Bulletin	●new text● (RB 1-Jan-2013)	(RB 1-Jan-2013)*
Text deletion	●●(IRA 1-Jul-2013) or	(IRA 1-Jul-2013)*
	▪▪1S *(USP36)* or	1S (USP36)*
	⬩ ⬩ *(USP36)*	USP36**
Adopted in *Supplement*	▪new text▪1S *(USP36)*	1 or 2S (USP annual edition)*
Adopted in *USP–NF*	⬩ new text⬩ *(USP36)*	USP annual edition**
Harmonization	◆ indicates residual national text or nonharmonized text	
Errata	●new text● (ERR 1-Jul-2012)	(ERR 1-Jul-2012)

* A subscript number or date indicates the *IRA*, *Revision Bulletin*, or *Supplement* in which the revision first appeared.
** An example of a revision that was officially adopted in the *USP–NF* would be ⬩ *(USP36)*.

The following table shows symbols and official dates for *IRAs* and *Supplements* to *USP 36–NF 31*.

***IRAs* and *Supplements* to *USP 36–NF 31* Official Dates and Symbols**

Supplement	Proposed IRA	Official Date	Symbols
	39(1)	July 1, 2013	●and● (IRA 1-Jul-2013)
1		Aug. 1, 2013	▪and▪1S *(USP36)*
	39(2)	Sept. 1, 2013	●and● (IRA 1-Sep-2013)
	39(3)	Nov. 1, 2013	●and● (IRA 1-Nov-2013)
2		Dec. 1, 2013	▪and▪2S *(USP36)*
	39(4)	Jan. 1, 2014	●and● (IRA 1-Jan-2014)
	39(5)	Mar. 1, 2014	●and● (IRA 1-Mar-2014)
	39(6)	May 1, 2014	●and● (IRA 1-May-2014)

***Commentary*—**In accordance with USP's *Rules and Procedures of the Council of Experts*, USP publishes all proposed revisions to *USP–NF* for public review and comment in the *PF*, USP's bimonthly online journal for public notice and comment. After comments are considered and incorporated as the Expert Committee deems appropriate, the proposal may advance to official status or be republished in *PF* for further notice and comment, in accordance with the *Rules and Procedures*. In cases when proposals advance to official status without republication in *PF*, a summary of comments received and the appropriate Expert Committee's responses are published in the *Commentary* section of the USP website at the time the revision is published.

The *Commentary* is not part of the official text and is not intended to be enforceable by regulatory authorities. Rather, it explains the basis of the Expert Committee's response to public comments. If there is a difference between the contents of the *Commentary* and the official text, the official text prevails. In case of a dispute or question of interpretation, the language of the official text, alone and independent of the *Commentary*, shall prevail.

Chemical Names and CAS Registry Numbers—Chemical subtitles given in the monographs are index names used by the Chemical Abstracts Service (CAS) of the American Chemical Society. They are provided only in monographs in which the titles specify substances that are definable chemical entities. The first subtitle is the inverted form of the systematic chemical name developed by CAS for the purpose of the Collective Index (CI). The second subtitle, given in uninverted form, is a preferred IUPAC name (PIN) sanctioned and used by the International Union of Pure and Applied Chemistry (IUPAC). Preferred IUPAC names are also used by the World Health Organization (WHO). Occasionally a third subtitle is supplied for historical reasons or when the synonym uses an alternative, but equivalent, naming convention. Monographs with chemical subtitles also generally carry CAS registry numbers. These bracketed numbers function independently of nomenclature as invariant numerical designators of unique, unambiguous chemical substances in the CAS registry and thus are convenient and widely used.

Print and Electronic Presentations—All *USP–NF* publications are available in print form (with the exception of the *Pharmacopeial Forum* and *Accelerated Revisions,* discussed above, which are posted on USP's website until incorporation into the next *USP–NF* or *Supplement*). In addition, *USP–NF* and its two annual *Supplements* are available in USB flash drive and online versions. The USB flash drive version makes *USP–NF* accessible to users on their computer hard drives. The online format allows individual registered users to access the online format through the Internet. Both electronic formats provide access to official *USP–NF* content, along with extensive search options. The electronic formats are cumulatively updated to integrate the content of *Supplements*. A searchable electronic version of the *USP Dictionary* also is available.

USP GOVERNING, STANDARDS-SETTING, AND ADVISORY BODIES

USP's governing, standards-setting, and advisory bodies include the USP Convention, the Board of Trustees, the Council of Experts and its Expert Committees, Expert Panels (formerly known as Advisory Panels), and staff. Additional volunteer bodies include Stakeholder Forums, Project Teams, and Advisory Groups, which act in an advisory capacity to provide input to USP's governing, standards-setting, and management bodies.

USP Convention—The composition of the USP Convention membership is designed to ensure a global representation from all sectors of health care, with an emphasis on practitioners, given USP's practitioner heritage (see the *History* section). Voting Delegates of Convention member organizations elect USP's President, Treasurer, other members of the Board of Trustees, and the Council of Experts. They also adopt resolutions to guide USP's strategic direction and amend USP's Bylaws. Convening on a 5-year cycle, the

Copyright (c) 2013 The United States Pharmacopeial Convention. All rights reserved.

last meeting of the USP Convention occurred in April 2010 in Washington, DC. A listing of all current Voting Delegates of the USP Convention is included in the *People* section.

Board of Trustees—USP's Board of Trustees is responsible for the management of the business affairs, finances, and property of USP. During its 5-year term, the Board defines USP's strategic direction through its key policy and operational decisions. A listing of the members of the 2010–2015 Board of Trustees is included in the *People* section.

Council of Experts—The Council of Experts is the standards-setting body of USP. For the 2010–2015 cycle it is composed of 22 members, elected to 5-year terms by USP's Convention, each of whom chairs an Expert Committee. These Chairs in turn elect the members of their Expert Committees. The Expert Committees are responsible for the content of USP's official and authorized publications (see *Figure 1*). The Executive Committee of the Council of Experts includes all Expert Committee Chairs and provides overall direction, is an appeals body, and performs other functions that support the Council of Experts' operations.

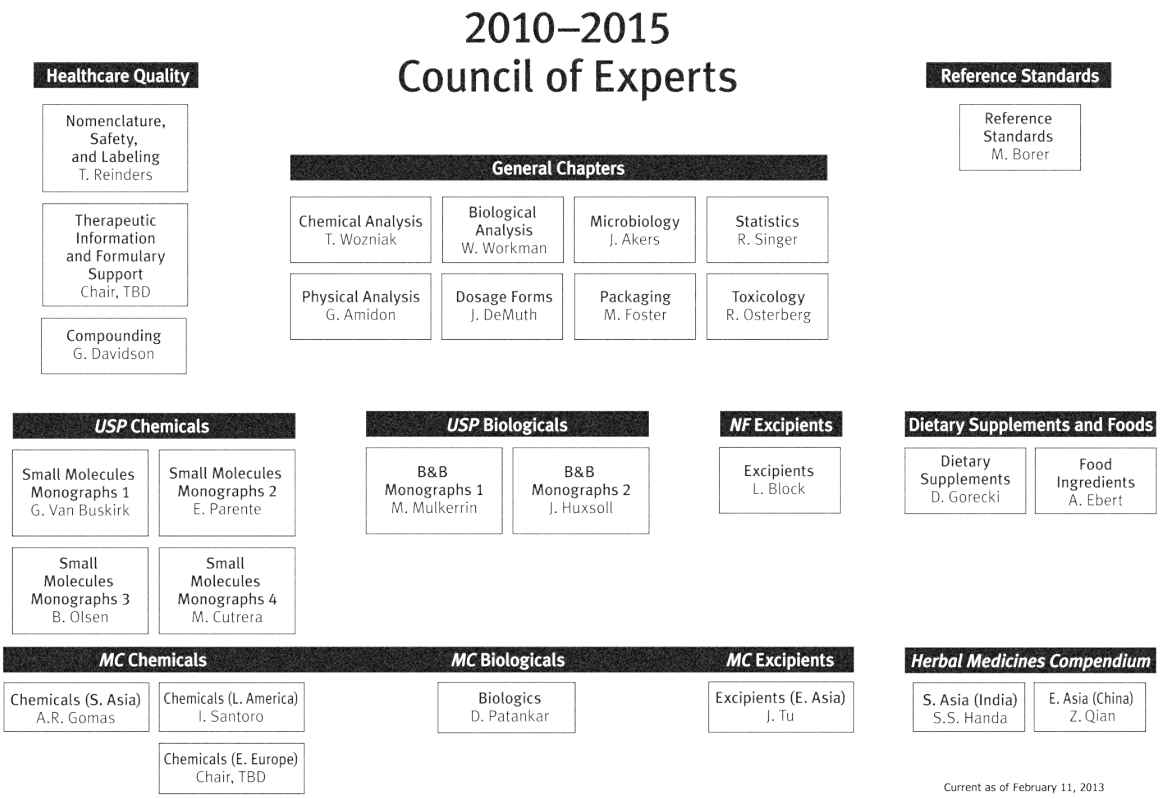

Figure 1. 2010–2015 USP Council of Experts.

Expert Panels to the Council of Experts—The Chair of the Council of Experts may appoint Expert Panels to assist the Council of Experts by providing advisory recommendations to particular Expert Committees in response to a specific charge consistent with the Expert Committee's Work Plan. Expert Panels are continuously formed; their topics and membership appear in the *People* section.

Stakeholder Forums and Project Teams—USP has formed several domestic and international Stakeholder Forums and Project Teams to exchange information on USP's standards-setting activities. Stakeholder Forums may form Project Teams to work on selected topics. The following lists the current USP Stakeholder Forums.

North American Stakeholder Forums (United States and Canada)
- Prescription/Nonprescription
- Dietary Supplements
- Food Ingredients
- Veterinary Drugs

International Stakeholder Forums
- India
- Mexico
- Brazil
- Others

USP also conducts Scientific and Standards Symposia (formerly Annual Scientific Meetings) in the United States, India, China, Latin America, Middle East/North Africa, and other regions of the world.

Accessed from 167.78.4.19 by James Cumbie (ocean22) on Mon Sep 09 15:04:23 EDT 2013

Staff—USP maintains a staff of over 700 scientists, professionals, and administrative personnel at its Rockville, Maryland, headquarters and throughout the world, including an account management office in Basel, Switzerland, and laboratory facilities in Hyderabad, India; Shanghai, China; and São Paulo, Brazil.

RULES AND PROCEDURES

Governing Documents—*USP–NF* standards are recognized widely because they are authoritative and science-based and are established by a transparent and credible process. See the *Articles of Incorporation* section in this book; the *Bylaws* and the *Rules and Procedures of the Council of Experts* are available on USP's website (www.usp.org). Collectively, these documents serve USP volunteers and staff as the governing principles for USP's standards-setting activities.

Conflicts of Interest—USP's Conflict of Interest provisions require all members of the Council of Experts, its Expert Committees, Expert Panels, Board of Trustees, and key staff to disclose financial or other interests that may interfere with their duties as USP volunteers. Members of the Board of Trustees, Council of Experts, and its Expert Committees are required to serve USP as individual experts and not serve any outside interest, and are not allowed to take part in the final discussion or vote on any matter in which they have a conflict of interest or the appearance of a conflict of interest. Members of advisory Expert Panels may participate and vote, so long as any notable interests and conflicts have been adequately and promptly disclosed and are communicated to the relevant Expert Committee along with any Expert Panel recommendations.

Confidentiality and Document Disclosure—Members of the Council of Experts, Expert Committees, and Expert Panels sign confidentiality agreements, in keeping with USP's Confidentiality Policy and the confidentiality provisions of the *Rules and Procedures of the Council of Experts*. The USP Document Disclosure Policy, available on USP's website, contributes to the transparency of the standards-setting process by making information available to the public, yet provides protection to manufacturers and others who submit confidential information to USP.

Authority for Publication—*USP–NF* is published in accordance with Article II, Purposes, of the USP Bylaws, which states, "The purposes for which the Convention is formed are as set forth in the Articles of Incorporation and include developing and disseminating public standards for medicines and other articles, and engaging in related public health programs."

USP–NF REVISION PROCESS

Public Participation—Although USP's Council of Experts is the ultimate decision-making body for *USP–NF* standards, these standards are developed by an exceptional process of public involvement and substantial interaction between USP and its stakeholders, both domestically and internationally. Participation in the revision process results from the support of many individuals and groups and also from scientific, technical, and trade organizations.

Requests for Revision of the *USP–NF*, whether new monographs or general chapters or those needing updating, contain information submitted voluntarily by manufacturers and other interested parties. At times USP staff and Expert Committees may develop information to support a *Request for Revision*. USP has prepared a document titled *Guideline for Submitting Requests for Revision to USP–NF* (available at www.usp.org; search on "Submission Guidelines"). Via *PF*, USP solicits and encourages public comment on these revision proposals. Comments received are considered by the Expert Committees, who determine whether changes should be made to the proposed revisions based on such comments. Proposed standards are finalized when Expert Committees vote to make them official text in *USP–NF*. Thus, the USP standards-setting process gives those who manufacture, regulate, and use therapeutic products the opportunity to comment on the development and revision of *USP–NF* standards. *Figure 2* shows the public review and comment process and its relationship to standards development.

Copyright (c) 2013 The United States Pharmacopeial Convention. All rights reserved.

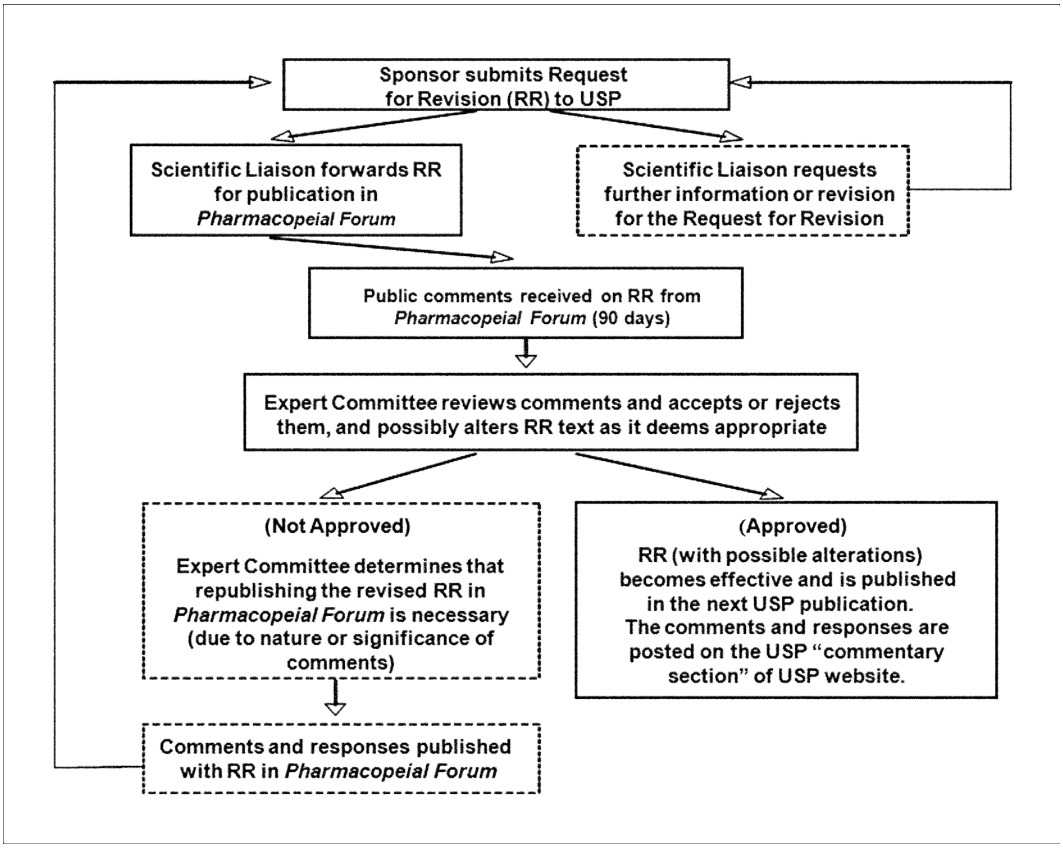

Figure 2. USP's standards-setting public review and comment process.

Working with the Food and Drug Administration (FDA)—As specified in U.S. law, USP works with the Secretary of the Department of Health and Human Services in many ways. The principal agency in the Department for this work is the Food and Drug Administration. The FDA Liaison Program allows FDA representatives to participate in Expert Committee and Expert Panel meetings, enabling interactions between FDA scientific staff and Expert Committees. Staff in the FDA Centers who are responsible for review of compendial activities provide specific links and opportunities for exchange of comments. Dr. Paul Seo in the Center for Drug Evaluation and Research provides a primary compendial point of contact between FDA and USP.

LEGAL RECOGNITION

Recognition of *USP–NF*—*USP–NF* is recognized by law and custom in many countries throughout the world. In the United States, the FD&C Act defines the term "official compendium" as the official *USP*, the official *NF*, the official *Homeopathic Pharmacopeia of the United States,* or any supplement to them. As noted below (and in *General Notices* section 2.30), *USP–NF* standards play a role in the adulteration and misbranding provisions of the FD&C Act (which apply as well to biologics, a subset of drugs, under the Public Health Service Act). USP has no role in enforcement of these or other provisions that recognize *USP–NF* standards, which is the responsibility of FDA and other government authorities in the United States and elsewhere.

Under the relevant FD&C Act provisions, a drug will be deemed misbranded unless its label bears to the exclusion of any other nonproprietary name the "established" name, which ordinarily is the compendial name (see discussion of *Nomenclature*, below). A drug with a name recognized in *USP–NF* must comply with the identity/identification requirements of its monograph, or be deemed adulterated, misbranded, or both. Drugs also must comply with compendial standards for strength, quality, and purity (tests for assay and impurities), unless labeled to show all respects in which the drugs differ. FDA requires that names for articles that are not official must be clearly distinguished and differentiated from any name recognized in an official compendium. Drugs with a name recognized in *USP–NF* also will be considered misbranded unless they meet compendial standards for packaging and labeling.

Drugs—USP's goal is to have substance and preparation (product) monographs in *USP–NF* for all FDA-approved drugs, including biologics, and their ingredients. USP also develops monographs for legally marketed therapeutic products not approved by FDA, e.g., pre-1938 drugs, over-the-counter (OTC) drugs marketed under FDA's OTC Monograph system, dietary supplements, and compounded preparations. Although submission of information needed to develop a monograph by the Council of Experts is voluntary, compliance with a *USP–NF* monograph, if applicable, is mandatory.

Biologics—In the United States, all biologics are considered a subset of drugs, whether they are approved by FDA under the FD&C Act (and receive a new drug application [NDA]) or under the Public Health Service Act (PHS Act, where they receive a biologics license application [BLA]). As a result, all PHS Act biologics are subject to the drug regulatory requirements of the FD&C Act, which means they are required to comply with the adulteration and misbranding provisions of the FD&C Act, including *USP–NF*

Accessed from 167.78.4.19 by James Cumbie (ocean22) on Mon Sep 09 15:04:23 EDT 2013

compendial requirements. This is equally so for biologics approved under the longstanding PHS Act "351(a)" pathway, as well as the new "351(k)" pathway for biosimilars added by the 2010 healthcare reform legislation (Biologics Price Competition and Innovation Act, Title VII, Subtitle A of the Patient Protection and Affordable Care Act, Public Law 111-148).

Medical Devices—Section 201(h) of the FD&C Act defines a device as an instrument, apparatus, similar article, or component thereof recognized in *USP–NF*. Section 502(e) of the FD&C Act defines the established name of a device in the absence of an FDA designation of the official name as the official title in an official compendium. Despite these statutory provisions, there is no comparable recognition of USP's role in establishing compendial standards for medical devices as exists for drugs and biologics. Under authority granted by the Food and Drug Administration Modernization Act of 1997, the Center for Devices and Radiological Health recognizes national and international standards, including some *USP* tests and assays, for medical devices.

Dietary Supplements—The Dietary Supplement Health and Education Act of 1994 amendments to the FD&C Act provide that a dietary supplement may be deemed a misbranded food if it is covered by the specifications of an official compendium (e.g., *USP–NF*), is represented as conforming to the specifications of an official compendium, and fails to so conform. This contrasts with pharmaceutical products, wherein conformance to applicable compendial standards is mandatory, whether or not the product claims to conform.

Compounded Preparations—Compounding means the preparation, mixing, assembling, altering, packaging, and labeling of a drug or device or other article, as the result of a practitioner's order or in anticipation of such an order based on routine, regularly observed prescribing patterns. USP provides both general chapters and monographs for compounded preparations. Compounded preparation monographs include formulas (ingredients and quantities), specific directions to correctly compound the particular preparation, packaging and storage information, labeling information, pH, beyond-use dates based on stability studies, and detailed assays (majority of monographs). Standards in *USP–NF* for compounded preparations may be enforced by both the states (as pharmacy practice/compounding is traditionally regulated by state boards of pharmacy), and FDA (as compounded preparations subject to FDA regulation as drugs remain subject to the adulteration and misbranding provisions of the FD&C Act, which require conformance to *USP–NF* standards).

Nomenclature—USP, as a member of the United States Adopted Names (USAN) Council, works to determine names for drug and biological substances. USP's authority to develop official nonproprietary names is identified in the misbranding provision of the FD&C Act, section 502(e) (see also FDA's policy on established names set forth in 21 CFR 299.4). Under both USP rules, and applicable federal law, official names mean the official title of an article recognized in *USP* or *NF*, which is determined when a monograph for the article is published, including the article's name in the monograph title. USP Expert Committees may not complete work on an applicable monograph until after FDA has licensed a drug or biologic, or USAN has designated a name. FDA-approved nonproprietary names are considered by FDA and the courts to be interim names that exist only unless and until USP designates a name. Congress in 1962 gave FDA the authority to change a USP-designated name; in the event FDA finds a USP name to be unduly complex or not useful for some other reason, the agency may conduct notice and comment rulemaking under section 508 of the FD&C Act, and designate a different official name for use in *USP* and *NF*. In contrast to USP's role in designating nonproprietary names, the designation of proprietary (brand) names is solely the responsibility of FDA, working with applicants.

The USP Nomenclature Expert Committee, the predecessor to the 2010–2015 Nomenclature, Safety, and Labeling (NSL) Expert Committee, was formed in 1986 to create appropriate established names for dosage forms and combination drug products, and to develop naming policies. Today, the NSL Expert Committee coordinates its work with the USAN Council, and in the great majority of cases retains the existing name given by USAN or FDA. The NSL also establishes the Pronunciation Guide, which is used by USAN.

The USAN Council began in 1961 by providing ingredient names for drugs prior to their marketing. USP participates in this activity, together with the American Medical Association, the American Pharmacists Association, and FDA. The Council's output is incorporated into the *USP Dictionary of USAN and International Drug Names* (see *USP Dictionary*, below).

HARMONIZATION ACTIVITIES

Pharmacopeial Discussion Group—USP harmonizes pharmacopeial excipient monographs and general chapters through the Pharmacopeial Discussion Group (PDG), which includes representatives from the European, Japanese, and United States pharmacopeias, and WHO (as an observer). According to the PDG definition, "a pharmacopeial general chapter or other pharmacopeial document is harmonized when a pharmaceutical substance or product tested by the document's harmonized procedure yields the same results, and the same accept/reject decision is reached." General information chapter ⟨1196⟩, *Pharmacopeial Harmonizatio*n, provides (1) the PDG Policy Statement, (2) the PDG Working Procedures and a definition of each stage of harmonization, (3) a discussion, (4) a status report, and (5) a glossary. More information regarding PDG is available on USP's website.

OTHER USP PUBLICATIONS

Chromatographic Columns—This comprehensive reference, previously titled *Chromatographic Reagents*, provides detailed information needed to conduct chromatographic procedures found in *USP–NF*. *Chromatographic Columns* lists the brand names of the column reagents cited in every proposal for new or revised gas- or liquid-chromatographic analytical procedures that have been published in *PF* since 1980. *Chromatographic Columns* also helps to track which column reagents were used to validate analytical procedures that have become official. The branded column reagents list is updated bimonthly and maintained on USP's website.

USP Dictionary—The *USP Dictionary of USAN and International Drug Names* provides in a single volume the most up-to-date United States Adopted Names of drugs; official *USP–NF* names; nonproprietary, brand, and chemical names; graphic formulas; molecular formulas and weights; CAS registry numbers and code designations; drug manufacturers; and pharmacologic and thera-

Copyright (c) 2013 The United States Pharmacopeial Convention. All rights reserved.

peutic categories. The *Dictionary* helps to ensure the accuracy of the following: product labeling; reports, articles, and correspondence; FDA regulatory filings; and pharmaceutical package inserts. It is published annually. (See *Nomenclature*.)

USP Dietary Supplements Compendium—The *Dietary Supplements Compendium* combines, in a single volume, *USP–NF* standards for dietary supplements, standards and information from the *Food Chemicals Codex*, regulatory and industry documents, and other tools and resources. It is published every 2 years, as a hardcover print edition.

Food Chemicals Codex—The *Food Chemicals Codex* (*FCC*) is a compendium of internationally recognized monograph standards and tests for the purity and quality of food ingredients, e.g., preservatives, flavorings, colorings, and nutrients. *FCC* is published every 2 years with supplements every 6 months, and is available in print and electronic formats. Proposed revisions to *FCC* are available for public viewing and comment through the *FCC Forum*. The *FCC Forum* can be accessed for free at forum.foodchemicalscodex.org.

USP Medicines Compendium—The *USP Medicines Compendium (MC)* is an online compendium that includes monographs, general chapters, and reference materials for suitable chemical and biological medicines and their ingredients approved by national regulatory authorities. The purpose of the *MC* is to help ensure that these medicines are of good quality by providing up-to-date, relevant public standards and reference materials. *MC* standards are available to manufacturers, purchasers, national regulatory authorities, and others to ensure conformity of a medicine to *MC* standards through testing. The *MC* does not include standards for foods or for traditional medicines/dietary supplements. The *MC* is available at www.usp-mc.org.

Accessed from 167.78.4.19 by James Cumbie (ocean22) on Mon Sep 09 15:04:23 EDT 2013

GENERAL NOTICES AND REQUIREMENTS

The *General Notices and Requirements* section (the *General Notices*) presents the basic assumptions, definitions, and default conditions for the interpretation and application of the *United States Pharmacopeia* (*USP*) and the *National Formulary* (*NF*).

Requirements stated in these *General Notices* apply to all articles recognized in the *USP* and *NF* (the "compendia") and to all general chapters unless specifically stated otherwise. Where the requirements of an individual monograph differ from the *General Notices* or a general chapter, the monograph requirements apply and supersede the requirements of the *General Notices* or the general chapter, whether or not the monograph explicitly states the difference.

1. TITLE AND REVISION

The full title of this publication (consisting of three volumes and including its *Supplements*), is *The Pharmacopeia of the United States of America*, Thirty-Sixth Revision and the *National Formulary,* Thirty-First Edition. These titles may be abbreviated to *USP 36*, to *NF 31,* and to *USP 36–NF 31.* The *United States Pharmacopeia,* Thirty-Sixth Revision, and the *National Formulary,* Thirty-First Edition, supersede all earlier revisions. Where the terms "*USP*," "*NF*," or "*USP–NF*" are used without further qualification during the period in which these compendia are official, they refer only to *USP 36, NF 31,* and any *Supplement(s)* thereto. The same titles, with no further distinction, apply equally to print or electronic presentation of these contents. Although *USP* and *NF* are published under one cover and share these *General Notices,* they are separate compendia.

This revision is official beginning May 1, 2013, unless otherwise indicated in specific text.

Supplements to *USP* and *NF* are published periodically.

Interim Revision Announcements are revisions to *USP* and *NF* that are published on the USP website. *Interim Revision Announcements* contain official revisions and their effective dates. Announcements of the availability of new USP Reference Standards and announcements of tests or procedures that are held in abeyance pending availability of required USP Reference Standards are also available on the "New Official Text" tab of USP's website.

Revision Bulletins are revisions to official text or postponements that require expedited publication. They are published on the USP website and generally are official immediately unless otherwise specified in the *Revision Bulletin*.

Errata are corrections to items erroneously published that have not received the approval of the Council of Experts and that do not reflect the official requirements. *Errata* are effective upon publication.

2. OFFICIAL STATUS AND LEGAL RECOGNITION

2.10. Official Text

Official text is text contained in *USP* and *NF,* including monographs, general chapters, and these *General Notices*. Revisions to official text are provided in *Supplements*, *Interim Revision Announcements*, and *Revision Bulletins*. General chapters numbered from 1000 to 1999 are considered interpretive and are intended to provide information on, give definition to, or describe a particular subject. They contain no mandatory requirements applicable to any official article unless specifically referenced in *General Notices,* a monograph, or a general chapter numbered below 1000. General chapters numbered above 2000 apply only to articles that are intended for use as dietary ingredients and dietary supplements.

2.20. Official Articles

An *official article* is an article that is recognized in *USP* or *NF*. An article is deemed to be recognized and included in a compendium when a monograph for the article is published in the compendium and an official date is generally or specifically assigned to the monograph.

The title specified in a monograph is the *official title* for such article. Other names considered to be synonyms of the official titles may not be used as substitutes for official titles.

Official articles include both *official substances* and *official products*. An *official substance* is a drug substance, excipient, dietary ingredient, other ingredient, or component of a finished device for which the monograph title includes no indication of the nature of the finished form.

An *official product* is a drug product, dietary supplement, compounded preparation, or finished device for which a monograph is provided.

2.30. Legal Recognition

The *USP* and *NF* are recognized in the laws and regulations of many countries throughout the world. Regulatory authorities may enforce the standards presented in the *USP* and *NF,* but because recognition of the *USP* and *NF* may vary by country, users should understand applicable laws and regulations. In the United States under the Federal Food, Drug, and Cosmetic Act (FDCA), both *USP* and *NF* are recognized as official compendia. A drug with a name recognized in *USP–NF* must comply with compendial identity standards or be deemed adulterated, misbranded, or both. See, e.g., FDCA § 501(b) and 502(e)(3)(b); also FDA regulations, 21 CFR § 299.5(a&b). To avoid being deemed adulterated, such drugs must also comply with compendial standards for strength, quality, and purity, unless labeled to show all respects in which the drug differs. See, e.g., FDCA § 501(b) and 21 CFR § 299.5(c). In

Copyright (c) 2013 The United States Pharmacopeial Convention. All rights reserved.

addition, to avoid being deemed misbranded, drugs recognized in *USP–NF* must also be packaged and labeled in compliance with compendial standards. See FDCA § 502(g).

A dietary supplement represented as conforming to specifications in *USP* will be deemed a misbranded food if it fails to so conform. See FDCA § 403(s)(2)(D).

Enforcement of *USP* standards is the responsibility of FDA and other government authorities in the U.S. and elsewhere. USP has no role in enforcement.

3. CONFORMANCE TO STANDARDS

3.10. Applicability of Standards

Standards for an article recognized in a *USP* compendium are expressed in the article's monograph, applicable general chapters, and *General Notices*. Unless specifically exempted elsewhere in a compendium, the identity, strength, quality, and purity of an article are determined by the official tests, procedures, and acceptance criteria, whether incorporated in the monograph itself, in the *General Notices*, or in the applicable general chapters. Early adoption of revised standards is allowed. Where revised standards for an existing article have been published as final approved "official text" (as approved in section 2.10) but are not yet official (six months after publication, unless otherwise specified; see "official date," section 2.20) compliance with the revised standard shall not preclude a finding or indication of conformance with *USP* official standards, unless USP specifies otherwise by prohibiting early adoption in a particular standard.

The standards in the relevant monograph, general chapter(s), and *General Notices* apply at all times in the life of the article from production to expiration. The manufacturer's specifications, and good manufacturing practices generally (including, e.g., Quality by Design initiatives), are developed and followed to ensure that the article will comply with compendial standards until its expiration date, when stored as directed. Thus, any official article is expected to meet the compendial standards if tested, and any official article actually tested as directed in the relevant monograph must meet such standards to demonstrate compliance.

At times, compendial standards take on the character of statistical procedures, with multiple units involved and perhaps a sequential procedural design to allow the user to determine that the tested article meets or does not meet the standard. The similarity to statistical procedures may seem to suggest an intent to make inference to some larger group of units, but in all cases, statements about whether the compendial standard is met apply only to the units tested. Repeats, replicates, statistical rejection of outliers, or extrapolations of results to larger populations, as well as the necessity and appropriate frequency of batch testing, are neither specified nor proscribed by the compendia. Frequency of testing and sampling are left to the preferences or direction of those performing compliance testing, and other users of *USP–NF*, including manufacturers, buyers, or regulatory authorities.

Official products are prepared according to recognized principles of good manufacturing practice and from ingredients that meet *USP* or *NF* standards, where standards for such ingredients exist (for dietary supplements, see section 3.10.20).

Official substances are prepared according to recognized principles of good manufacturing practice and from ingredients complying with specifications designed to ensure that the resultant substances meet the requirements of the compendial monographs.

3.10.10. Applicability of Standards to Drug Products, Drug Substances, and Excipients

The applicable *USP* or *NF* standard applies to any article marketed in the United States that (1) is recognized in the compendium and (2) is intended or labeled for use as a drug or as an ingredient in a drug. The applicable standard applies to such articles whether or not the added designation "USP" or "NF" is used. The standards apply equally to articles bearing the official titles or names derived by transposition of the definitive words of official titles or transposition in the order of the names of two or more active ingredients in official titles, or where there is use of synonyms with the intent or effect of suggesting a significant degree of identity with the official title or name.

3.10.20. Applicability of Standards to Medical Devices, Dietary Supplements, and Their Components and Ingredients

An article recognized in *USP* or *NF* shall comply with the compendial standards if the article is a medical device, component intended for a medical device, dietary supplement, dietary ingredient, or other ingredient that is intended for incorporation into a dietary supplement, and is labeled as conforming to the *USP* or *NF*.

Generally, dietary supplements are prepared from ingredients that meet *USP, NF,* or *Food Chemicals Codex* standards. Where such standards do not exist, substances may be used in dietary supplements if they have been shown to be of acceptable food grade quality using other suitable procedures.

3.20. Indicating Conformance

A drug product, drug substance, or excipient may use the designation "USP" or "NF" in conjunction with its official title or elsewhere on the label only when (1) a monograph is provided in the specified compendium and (2) the article complies with the identity prescribed in the specified compendium.

When a drug product, drug substance, or excipient differs from the relevant *USP* or *NF* standard of strength, quality, or purity, as determined by the application of the tests, procedures, and acceptance criteria set forth in the relevant compendium, its difference shall be plainly stated on its label.

When a drug product, drug substance, or excipient fails to comply with the identity prescribed in *USP* or *NF* or contains an added substance that interferes with the prescribed tests and procedures, the article shall be designated by a name that is clearly distinguishing and differentiating from any name recognized in *USP* or *NF.*

A medical device, dietary supplement, or ingredient or component of a medical device or dietary supplement may use the designation "USP" or "NF" in conjunction with its official title or elsewhere on the label only when (1) a monograph is provided in the specified compendium and (2) the article complies with the monograph standards and other applicable standards in the compendium.

The designation "USP" or "NF" on the label may not and does not constitute an endorsement by USP and does not represent assurance by USP that the article is known to comply with the relevant standards. USP may seek legal redress if an article purports to

Accessed from 167.78.4.19 by James Cumbie (ocean22) on Mon Sep 09 15:04:23 EDT 2013

be or is represented as an official article in one of USP's compendia and such claim is determined by USP not to be made in good faith.

The designation "USP–NF" may be used on the label of an article provided that the label also bears a statement such as "Meets *NF* standards as published by USP," indicating the particular compendium to which the article purports to apply.

When the letters "USP," "NF," or "USP–NF" are used on the label of an article to indicate compliance with compendial standards, the letters shall appear in conjunction with the official title of the article. The letters are not to be enclosed in any symbol such as a circle, square, etc., and shall appear in capital letters.

If a dietary supplement does not comply with all applicable compendial requirements but contains one or more dietary ingredients or other ingredients that are recognized in *USP* or *NF,* the individual ingredient(s) may be designated as complying with *USP* or *NF* standards or being of *USP* or *NF* quality provided that the designation is limited to the individual ingredient(s) and does not suggest that the dietary supplement complies with *USP* standards.

4. MONOGRAPHS AND GENERAL CHAPTERS

4.10. Monographs

Monographs set forth the article's name, definition, specification, and other requirements related to packaging, storage, and labeling. The specification consists of tests, procedures, and acceptance criteria that help ensure the identity, strength, quality, and purity of the article. For general requirements relating to specific monograph sections, see section 5, *Monograph Components.*

Because monographs may not provide standards for all relevant characteristics, some official substances may conform to the *USP* or *NF* standard but differ with regard to nonstandardized properties that are relevant to their use in specific preparations. To assure interchangeability in such instances, users may wish to ascertain functional equivalence or determine such characteristics before use.

4.10.10. Applicability of Test Procedures

A single monograph may include several different tests, procedures, and/or acceptance criteria that reflect attributes of different manufacturers' articles. Such alternatives may be presented for different polymorphic forms, impurities, hydrates, and dissolution cases. Monographs indicate the tests, procedures, and/or acceptance criteria to be used and the required labeling.

A test in a monograph may contain and require multiple procedures. However, multiple procedures may be included in particular monographs specifically for the purpose of assuring the availability of an appropriate procedure for a particular product. In such cases, a labeling statement to indicate the appropriate application of the procedure(s) will be included in the monograph. A labeling statement is not required if Test 1 is used.

4.10.20. Acceptance Criteria

The acceptance criteria allow for analytical error, for unavoidable variations in manufacturing and compounding, and for deterioration to an extent considered acceptable under practical conditions. The existence of compendial acceptance criteria does not constitute a basis for a claim that an official substance that more nearly approaches 100 percent purity "exceeds" compendial quality. Similarly, the fact that an article has been prepared to tighter criteria than those specified in the monograph does not constitute a basis for a claim that the article "exceeds" the compendial requirements.

An official product shall be formulated with the intent to provide 100 percent of the quantity of each ingredient declared on the label. Where the minimum amount of a substance present in a dietary supplement is required by law to be higher than the lower acceptance criterion allowed for in the monograph, the upper acceptance criterion contained in the monograph may be increased by a corresponding amount.

The acceptance criteria specified in individual monographs and in the general chapters for compounded preparations are based on such attributes of quality as might be expected to characterize an article compounded from suitable bulk drug substances and ingredients, using the procedures provided or recognized principles of good compounding practice, as described in these compendia.

4.20. General Chapters

Each general chapter is assigned a number that appears in angle brackets adjacent to the chapter name (e.g., *Chromatography* ⟨621⟩). General chapters may contain the following:

- Descriptions of tests and procedures for application through individual monographs,
- Descriptions and specifications of conditions and practices for pharmaceutical compounding,
- General information for the interpretation of the compendial requirements,
- Descriptions of general pharmaceutical storage, dispensing, and packaging practices, or
- General guidance to manufacturers of official substances or official products.

When a general chapter is referenced in a monograph, acceptance criteria may be presented after a colon.

Some chapters may serve as introductory overviews of a test or of analytical techniques. They may reference other general chapters that contain techniques, details of the procedures, and, at times, acceptance criteria.

5. MONOGRAPH COMPONENTS

5.10. Molecular Formula

The use of the molecular formula for the active ingredient(s) named in defining the required strength of a compendial article is intended to designate the chemical entity or entities, as given in the complete chemical name of the article, having absolute (100 percent) purity.

5.20. Added Substances

Added substances are presumed to be unsuitable for inclusion in an official article and therefore prohibited, if: (1) they exceed the minimum quantity required for providing their intended effect; (2) their presence impairs the bioavailability, therapeutic efficacy, or

Copyright (c) 2013 The United States Pharmacopeial Convention. All rights reserved.

safety of the official article; or (3) they interfere with the assays and tests prescribed for determining compliance with the compendial standards.

The air in a container of an official article may, where appropriate, be evacuated or be replaced by carbon dioxide, helium, argon, or nitrogen, or by a mixture of these gases. The use of such gas need not be declared in the labeling.

5.20.10. Added Substances, Excipients, and Ingredients in Official Substances

Official substances may contain only the specific added substances that are permitted by the individual monograph. Where such addition is permitted, the label shall indicate the name(s) and amount(s) of any added substance(s).

5.20.20. Added Substances, Excipients, and Ingredients in Official Products

Suitable substances and excipients such as antimicrobial agents, pharmaceutical bases, carriers, coatings, flavors, preservatives, stabilizers, and vehicles may be added to an official product to enhance its stability, usefulness, or elegance, or to facilitate its preparation, unless otherwise specified in the individual monograph.

Added substances and excipients employed solely to impart color may be incorporated into official products other than those intended for parenteral or ophthalmic use, in accordance with the regulations pertaining to the use of colors issued by the U.S. Food and Drug Administration (FDA), provided such added substances or excipients are otherwise appropriate in all respects. (See also *Added Substances* under *Injections* ⟨1⟩.)

The proportions of the substances constituting the base in ointment and suppository products and preparations may be varied to maintain a suitable consistency under different climatic conditions, provided that the concentrations of active ingredients are not varied and provided that the bioavailability, therapeutic efficacy, and safety of the preparation are not impaired.

5.20.20.1. In Compounded Preparations

Compounded preparations for which a complete composition is given shall contain only the ingredients named in the formulas unless specifically exempted herein or in the individual monograph. Deviation from the specified processes or methods of compounding, although not from the ingredients or proportions thereof, may occur provided that the finished preparation conforms to the relevant standards and to preparations produced by following the specified process.

Where a monograph for a compounded preparation calls for an ingredient in an amount expressed on the dried basis, the ingredient need not be dried before use if due allowance is made for the water or other volatile substances present in the quantity taken.

Specially denatured alcohol formulas are available for use in accordance with federal statutes and regulations of the Internal Revenue Service. A suitable formula of specially denatured alcohol may be substituted for Alcohol in the manufacture of official preparations intended for internal or topical use, provided that the denaturant is volatile and does not remain in the finished product. A preparation that is intended for topical application to the skin may contain specially denatured alcohol, provided that the denaturant is either a usual ingredient in the preparation or a permissible added substance; in either case the denaturant shall be identified on the label of the topical preparation. Where a process is given in the individual monograph, any preparation compounded using denatured alcohol shall be identical to that prepared by the monograph process.

5.20.20.2. In Dietary Supplements

Additional ingredients may be added to dietary supplement products provided that the additional ingredients: (1) comply with applicable regulatory requirements; and (2) do not interfere with the assays and tests prescribed for determining compliance with compendial standards.

5.30. Description and Solubility

Only where a quantitative solubility test is given in a monograph and is designated as such is it a test for purity.

A monograph may include information regarding the article's description. Information about an article's "description and solubility" also is provided in the reference table *Description and Relative Solubility of USP and NF Articles*. The reference table merely denotes the properties of articles that comply with monograph standards. The reference table is intended primarily for those who use, prepare, and dispense drugs and/or related articles. Although the information provided in monographs and the information in the reference table may indirectly assist in the preliminary evaluation of an article, it is not intended to serve as a standard or test for purity.

The approximate solubility of a compendial substance is indicated by one of the following descriptive terms:

Descriptive Term	Parts of Solvent Required for 1 Part of Solute
Very soluble	Less than 1
Freely soluble	From 1 to 10
Soluble	From 10 to 30
Sparingly soluble	From 30 to 100
Slightly soluble	From 100 to 1,000
Very slightly soluble	From 1,000 to 10,000
Practically insoluble, or Insoluble	Greater than or equal to 10,000

5.40. Identity

A compendial test titled *Identity* or *Identification* is provided as an aid in verifying the identity of articles as they are purported to be, e.g., those taken from labeled containers, and to establish whether it is the article named in *USP–NF*. The *Identity* or *Identification* test for a particular article may consist of one or more procedures. When a compendial test for *Identity* or *Identification* is undertaken, all requirements of all specified procedures in the test must be met to satisfy the requirements of the test. Failure of an

Accessed from 167.78.4.19 by James Cumbie (ocean22) on Mon Sep 09 15:04:23 EDT 2013

article to meet all the requirements of a prescribed *Identity* or *Identification* test (i.e., failure to meet the requirements of all of the specified procedures that are components of that test) indicates that the article is mislabeled and/or adulterated.

5.50. Assay

Assay tests for compounded preparations are not intended for evaluating a compounded preparation before dispensing, but instead are intended to serve as the official test in the event of a question or dispute regarding the preparation's conformance to official standards.

5.50.10. Units of Potency (Biological)

For substances that cannot be completely characterized by chemical and physical means, it may be necessary to express quantities of activity in biological units of potency, each defined by an authoritative, designated reference standard.

Units of biological potency defined by the World Health Organization (WHO) for International Biological Standards and International Biological Reference Preparations are termed International Units (IU). Monographs refer to the units defined by USP Reference Standards as "USP Units." For biological products, units of potency are defined by the corresponding U.S. Standard established by FDA, whether or not International Units or USP Units have been defined (see *Biologics* ⟨1041⟩).

5.60. Impurities and Foreign Substances

Tests for the presence of impurities and foreign substances are provided to limit such substances to amounts that are unobjectionable under conditions in which the article is customarily employed (see also *Impurities in Official Articles* ⟨1086⟩).

Nonmonograph tests and acceptance criteria suitable for detecting and controlling impurities that may result from a change in the processing methods or that may be introduced from external sources should be employed in addition to the tests provided in the individual monograph, where the presence of the impurity is inconsistent with applicable good manufacturing practices or good pharmaceutical practice.

5.60.10. Other Impurities in *USP* and *NF* Articles

If a *USP* or *NF* monograph includes an assay or organic impurity test based on chromatography, other than a test for residual solvents, and that monograph procedure does not detect an impurity present in the substance, the amount and identity of the impurity, where both are known, shall be stated in the labeling (certificate of analysis) of the official substance, under the heading *Other Impurity(ies)*.

The presence of any unlabeled other impurity in an official substance is a variance from the standard if the content is 0.1% or greater. The sum of all *Other Impurities* combined with the monograph-detected impurities may not exceed 2.0% (see *Ordinary Impurities* ⟨466⟩), unless otherwise stated in the monograph.

The following categories of drug substances are excluded from *Other Impurities* requirements:

- fermentation products and semi-synthetics derived therefrom,
- radiopharmaceuticals,
- biologics,
- biotechnology-derived products,
- peptides,
- herbals, and
- crude products of animal or plant origin.

Any substance known to be toxic shall not be listed under *Other Impurities*.

5.60.20. Residual Solvents in *USP* and *NF* Articles

All *USP* and *NF* articles are subject to relevant control of residual solvents, even when no test is specified in the individual monograph. If solvents are used during production, they must be of suitable quality. In addition, the toxicity and residual level of each solvent shall be taken into consideration, and the solvents limited according to the principles defined and the requirements specified in *Residual Solvents* ⟨467⟩, using the general methods presented therein or other suitable methods.

5.70. Performance Tests

Where content uniformity determinations have been made using the same analytical methodology specified in the *Assay,* with appropriate allowances made for differences in sample preparation, the average of all of the individual content uniformity determinations may be used as the *Assay* value.

5.80. USP Reference Standards

USP Reference Standards are authentic specimens that have been approved as suitable for use as comparison standards in *USP* or *NF* tests and assays. (See *USP Reference Standards* ⟨11⟩.) Where a procedure calls for the use of a compendial article rather than for a USP Reference Standard as a material standard of reference, a substance meeting all of the compendial monograph requirements for that article shall be used. If any new *USP* or *NF* standard requires the use of a new USP Reference Standard that is not yet available, that portion of the standard containing the requirement shall not be official until the specified USP reference material is available.

Unless a reference standard label bears a specific potency or content, assume the reference standard is 100.0% pure in the official application. Unless otherwise directed in the procedure in the individual monograph or in a general chapter, USP Reference Standards are to be used in accordance with the instructions on the label of the Reference Standard.

6. TESTING PRACTICES AND PROCEDURES

6.10. Safe Laboratory Practices

In performing compendial procedures, safe laboratory practices shall be followed, including precautionary measures, protective equipment, and work practices consistent with the chemicals and procedures used. Before undertaking any procedure described in the compendia, the analyst should be aware of the hazards associated with the chemicals and the techniques and means of protecting against them. These compendia are not designed to describe such hazards or protective measures.

Copyright (c) 2013 The United States Pharmacopeial Convention. All rights reserved.

6.20. Automated Procedures

Automated and manual procedures employing the same basic chemistry are considered equivalent.

6.30. Alternative and Harmonized Methods and Procedures

Alternative methods and/or procedures may be used if they provide advantages in terms of accuracy, sensitivity, precision, selectivity, or adaptability to automation or computerized data reduction, or in other special circumstances. Such alternative procedures and methods shall be validated as described in the general chapter *Validation of Compendial Procedures* ⟨1225⟩ and must be shown to give equivalent or better results. Only those results obtained by the methods and procedures given in the compendium are conclusive.

Alternative procedures should be submitted to USP for evaluation as a potential replacement or addition to the standard (see section 4.10, *Monographs*).

Certain general chapters contain a statement that the text in question is harmonized with the corresponding text of the *European Pharmacopoeia* and/or the *Japanese Pharmacopoeia* and that these texts are interchangeable. Therefore, if a substance or preparation is found to comply with a requirement using an interchangeable method or procedure from one of these pharmacopeias, it should comply with the requirements of the *USP*. When a difference appears, or in the event of dispute, only the result obtained by the method and/or procedure given in the *USP* is conclusive.

6.40. Dried, Anhydrous, Ignited, or Solvent-Free Basis

All calculations in the compendia assume an "as-is" basis unless otherwise specified.

Test procedures may be performed on the undried or unignited substance and the results calculated on the dried, anhydrous, or ignited basis, provided a test for *Loss on Drying,* or *Water,* or *Loss on Ignition,* respectively, is given in the monograph. Where the presence of moisture or other volatile material may interfere with the procedure, previous drying of the substance is specified in the individual monograph and is obligatory.

The term "solvent-free" signifies that the calculation shall be corrected for the presence of known solvents as determined using the methods described in *Residual Solvents* ⟨467⟩ unless a test for limit of organic solvents is provided in the monograph.

The term "previously dried" without qualification signifies that the substance shall be dried as directed under *Loss on Drying* ⟨731⟩ or *Water Determination* ⟨921⟩ (gravimetric determination).

Where drying in vacuum over a desiccant is directed, a vacuum desiccator, a vacuum drying pistol, or other suitable vacuum drying apparatus shall be used.

6.40.10. Ignite To Constant Weight

"Ignite to constant weight" means that ignition shall be continued at 800 ± 25°, unless otherwise indicated, until two consecutive weighings, the second of which is taken after an additional period appropriate to the nature and quantity of the residue, do not differ by more than 0.50 mg per g of substance taken.

6.40.20. Dried To Constant Weight

"Dried to constant weight" means that drying shall be continued until two consecutive weighings, the second of which is taken after an additional drying period appropriate to the nature and quantity of the residue, do not differ by more than 0.50 mg per g of substance taken.

6.50. Preparation of Solutions

6.50.10. Filtration

Where a procedure gives direction to "filter" without further qualification, the liquid shall be passed through suitable filter paper or equivalent device until the filtrate is clear. Due to the possibility of filter effects, the initial volumes of a filtrate may be discarded.

6.50.20. Solutions

Unless otherwise specified, all solutions shall be prepared with Purified Water. Solutions for quantitative measures shall be prepared using accurately weighed or accurately measured analytes (see section 8.20, *About*).

An expression such as "(1 in 10)" means that 1 part *by volume* of a liquid shall be diluted with, or 1 part *by weight* of a solid shall be dissolved in, a sufficient quantity of the diluent or solvent to make the volume of the finished solution 10 parts *by volume*. An expression such as "(20:5:2)" means that the respective numbers of parts, by volume, of the designated liquids shall be mixed, unless otherwise indicated.

6.50.20.1. Adjustments to Solutions

When a specified concentration is called for in a procedure, a solution of other normality or molarity may be used, provided that allowance is made for the difference in concentration and that the change does not increase the error of measurement.

Unless otherwise indicated, analyte concentrations shall be prepared to within ten percent (10%) of the indicated value. In the special case in which a procedure is adapted to the working range of an instrument, solution concentrations may differ from the indicated value by more than ten percent (10%), with appropriate changes in associated calculations. Any changes shall fall within the validated range of the instrument.

When adjustment of pH is indicated with either an acid or base and the concentration is not indicated, appropriate concentrations of that acid or base may be used.

6.50.20.2. Test Solutions

Information on Test Solutions (TS) is provided in the *Test Solutions* portion of the *Reagents, Indicators, and Solutions* section of the *USP–NF*. Use of an alternative Test Solution or a change in the Test Solution used may require validation.

Accessed from 167.78.4.19 by James Cumbie (ocean22) on Mon Sep 09 15:04:23 EDT 2013

6.50.20.3. Indicator Solutions

Where a procedure specifies the use of an indicator TS, approximately 0.2 mL, or 3 drops, of the solution shall be added unless otherwise directed.

6.60. Units Necessary to Complete a Test

Unless otherwise specified, a sufficient number of units to ensure a suitable analytical result shall be taken.

6.60.10. Tablets

Where the procedure of a Tablet monograph directs to weigh and finely powder not fewer than a given number of Tablets, a counted number of Tablets shall be weighed and reduced to a powder. The portion of the powdered Tablets taken shall be representative of the whole Tablets and shall, in turn, be weighed accurately.

6.60.20. Capsules

Where the procedure of a Capsule monograph gives direction to remove, as completely as possible, the contents of not fewer than a given number of the Capsules, a counted number of Capsules shall be carefully opened and the contents quantitatively removed, combined, mixed, and weighed accurately. The portion of mixed Capsules contents taken shall be representative of the contents of the Capsules and shall, in turn, be weighed accurately.

6.70. Reagents

The proper conduct of the compendial procedures and the reliability of the results depend, in part, upon the quality of the reagents used in the performance of the procedures. Unless otherwise specified, reagents conforming to the specifications set forth in the current edition of *Reagent Chemicals* published by the American Chemical Society (ACS) shall be used. Where such ACS reagent specifications are not available or where the required purity differs, compendial specifications for reagents of acceptable quality are provided (see the *Reagents, Indicators, and Solutions* section of the *USP–NF*). Reagents not covered by any of these specifications should be of a grade suitable to the proper performance of the method of assay or test involved.

Listing of these reagents, including the indicators and solutions employed as reagents, in no way implies that they have therapeutic utility; furthermore, any reference to *USP* or *NF* in their labeling shall include also the term "reagent" or "reagent grade." USP may supply reagents if they otherwise may not be generally commercially available.

6.80. Equipment

Unless otherwise specified, a specification for a definite size or type of container or apparatus in a procedure is given solely as a recommendation. Other dimensions or types may be used if they are suitable for the intended use.

6.80.10. Apparatus for Measurement

Where volumetric flasks or other exact measuring, weighing, or sorting devices are specified, this or other equipment of at least equivalent accuracy shall be employed.

6.80.10.1. Pipet

Where a pipet is specified, a suitable buret may be substituted. Where a "to contain" pipet is specified, a suitable volumetric flask may be substituted.

6.80.10.2. Light Protection

Where low-actinic or light-resistant containers are specified, either containers specially treated to protect contents from light or clear containers that have been rendered opaque by application of a suitable coating or wrapping may be used.

6.80.20. Instrumental Apparatus

An instrument may be substituted for the specified instrument if the substitute uses the same fundamental principles of operation and is of equivalent or greater sensitivity and accuracy. These characteristics shall be qualified as appropriate. Where a particular brand or source of a material, instrument, or piece of equipment, or the name and address of a manufacturer or distributor, is mentioned (ordinarily in a footnote), this identification is furnished solely for informational purposes as a matter of convenience, without implication of approval, endorsement, or certification.

6.80.20.1. Chromatographic Tubes and Columns

The term "diameter" refers to internal diameter (ID).

6.80.20.2. Tubing

The term "diameter" refers to outside diameter (OD).

6.80.20.3. Steam Bath

Where use of a steam bath is directed, use actively flowing steam or another regulated heat source controlled at an equivalent temperature.

6.80.20.4. Water Bath

A water bath requires vigorously boiling water unless otherwise specified.

Copyright (c) 2013 The United States Pharmacopeial Convention. All rights reserved.

7. TEST RESULTS

7.10. Interpretation of Requirements

Analytical results observed in the laboratory (or calculated from experimental measurements) are compared with stated acceptance criteria to determine whether the article conforms to compendial requirements.

The reportable value, which often is a summary value for several individual determinations, is compared with the acceptance criteria. The reportable value is the end result of a completed measurement procedure, as documented.

Where acceptance criteria are expressed numerically herein through specification of an upper and/or lower limit, permitted values include the specified values themselves, but no values outside the limit(s). Acceptance criteria are considered significant to the last digit shown.

7.10.5. Nominal Concentrations in Equations

Where a "nominal concentration" is specified, calculate the concentration based on the label claim. In assay procedures, water correction is typically stated in the Definition and on the label of the USP Reference Standard. For other procedures, correction for assayed content, potency, or both is made prior to using the concentration in the equation provided in the monograph.

7.10.10. Equivalence Statements in Titrimetric Procedures

The directions for titrimetric procedures conclude with a statement of the weight of the analyte that is equivalent to each mL of the standardized titrant. In such an equivalence statement, the number of significant figures in the concentration of the titrant should be understood to correspond to the number of significant figures in the weight of the analyte. Corrections to calculations based on the blank determination are to be made for all titrimetric assays where appropriate (see *Titrimetry* ⟨541⟩).

7.20. Rounding Rules

The observed or calculated values shall be rounded off to the number of decimal places that is in agreement with the limit expression. Numbers should not be rounded until the final calculations for the reportable value have been completed. Intermediate calculations (e.g., slope for linearity) may be rounded for reporting purposes, but the original (not rounded) value should be used for any additional required calculations. Acceptance criteria are fixed numbers and are not rounded.

When rounding is required, consider only one digit in the decimal place to the right of the last place in the limit expression. If this digit is smaller than 5, it is eliminated and the preceding digit is unchanged. If this digit is equal to or greater than 5, it is eliminated and the preceding digit is increased by 1.

8. TERMS AND DEFINITIONS

8.10. Abbreviations

- RS refers to a USP Reference Standard.
- CS refers to a Colorimetric Solution.
- TS refers to a Test Solution.
- VS refers to a Volumetric Solution that is standardized in accordance with directions given in the individual monograph or in the *Reagents, Indicators, and Solutions* section of *USP–NF*.

8.20. About

"About" indicates a quantity within 10%.

If the measurement is stated to be "accurately measured" or "accurately weighed," follow the statements in the general chapters *Volumetric Apparatus* ⟨31⟩ and *Weights and Balances* ⟨41⟩, respectively.

8.30. Alcohol Content

Percentages of alcohol, such as those under the heading *Alcohol Content,* refer to percentage by volume of C_2H_5OH at 15.56°. Where a formula, test, or assay calls for alcohol, ethyl alcohol, or ethanol, the *USP* monograph article Alcohol shall be used. Where reference is made to "C_2H_5OH," absolute (100 percent) ethanol is intended. Where a procedure calls for dehydrated alcohol, alcohol absolute, or anhydrous alcohol, the *USP* monograph article Dehydrated Alcohol shall be used.

8.40. Atomic Weights

Illustration of Rounding Numerical Values for Comparison with Requirements

Compendial Requirement	Unrounded Value	Rounded Result	Conforms
Assay limit ≥98.0%	97.96%	98.0%	Yes
	97.92%	97.9%	No
	97.95%	98.0%	Yes
Assay limit ≤101.5%	101.55%	101.6%	No
	101.46%	101.5%	Yes
	101.45%	101.5%	Yes
Limit test ≤0.02%	0.025%	0.03%	No
	0.015%	0.02%	Yes
	0.027%	0.03%	No
Limit test ≤3 ppm	3.5 ppm	4 ppm	No
	3.4 ppm	3 ppm	Yes
	2.5 ppm	3 ppm	Yes

Accessed from 167.78.4.19 by James Cumbie (ocean22) on Mon Sep 09 15:04:23 EDT 2013

Atomic weights used in computing molecular weights and the factors in the assays and elsewhere are those established by the IUPAC Commission on Atomic Weights and Isotopic Abundances.

8.50. Blank Determinations

Where it is directed that "any necessary correction" be made by a blank determination, the determination shall be conducted using the same quantities of the same reagents treated in the same manner as the solution or mixture containing the portion of the substance under assay or test, but with the substance itself omitted.

8.60. Concomitantly

"Concomitantly" denotes that the determinations or measurements are to be performed in immediate succession.

8.70. Desiccator

The instruction "in a desiccator" indicates use of a tightly closed container of suitable size and design that maintains an atmosphere of low moisture content by means of a suitable desiccant such as anhydrous calcium chloride, magnesium perchlorate, phosphorus pentoxide, or silica gel. See also section 8.220, *Vacuum Desiccator*.

8.80. Logarithms

Logarithms are to the base 10.

8.90. Microbial Strain

A microbial strain cited and identified by its ATCC catalog number shall be used directly or, if subcultured, shall be used not more than five passages removed from the original strain.

8.100. Negligible

"Negligible" indicates a quantity not exceeding 0.50 mg.

8.110. NLT/NMT

"NLT" means "not less than." "NMT" means "not more than."

8.120. Odor

"Odorless," "practically odorless," "a faint characteristic odor," and variations thereof indicate evaluation of a suitable quantity of freshly opened material after exposure to the air for 15 minutes. An odor designation is descriptive only and should not be regarded as a standard of purity for a particular lot of an article.

8.130. Percent

"Percent" used without qualification means:

- For mixtures of solids and semisolids, percent weight in weight;
- For solutions or suspensions of solids in liquids, percent weight in volume;
- For solutions of liquids in liquids, percent volume in volume;
- For solutions of gases in liquids, percent weight in volume.

For example, a 1 percent solution is prepared by dissolving 1 g of a solid or semisolid, or 1 mL of a liquid, in sufficient solvent to make 100 mL of the solution.

8.140. Percentage Concentrations

Percentage concentrations are expressed as follows:

- *Percent Weight in Weight* (w/w) is defined as the number of g of a solute in 100 g of solution.
- *Percent Weight in Volume* (w/v) is defined as number of g of a solute in 100 mL of solution.
- *Percent Volume in Volume* (v/v) is defined as the number of mL of a solute in 100 mL of solution.

8.150. Pressure

Pressure is determined by use of a suitable manometer or barometer calibrated in terms of the pressure exerted by a column of mercury of the stated height.

8.160. Reaction Time

Reaction time is 5 minutes unless otherwise specified.

8.170. Specific Gravity

Specific gravity is the weight of a substance in air at 25° divided by the weight of an equal volume of water at the same temperature.

8.180. Temperatures

Temperatures are expressed in centigrade (Celsius) degrees, and all measurements are made at 25° unless otherwise indicated. Where moderate heat is specified, any temperature not higher than 45°(113° F) is indicated.

8.190. Time

Unless otherwise specified, rounding rules, as described in section 7.20, *Rounding Rules*, apply to any time specified.

8.200. Transfer

"Transfer" indicates a quantitative manipulation.

8.210. Vacuum

"Vacuum" denotes exposure to a pressure of less than 20 mm of mercury (2.67 kPas), unless otherwise indicated.

Copyright (c) 2013 The United States Pharmacopeial Convention. All rights reserved.

8.220. Vacuum Desiccator

"Vacuum desiccator" indicates a desiccator that maintains a low-moisture atmosphere at a reduced pressure of not more than 20 mm of mercury (2.67 kPas) or at the pressure designated in the individual monograph.

8.230. Water

8.230.10. Water as an Ingredient in an Official Product

As an ingredient in an official product, water meets the requirements of the appropriate water monograph in *USP* or *NF*.

8.230.20. Water in the Manufacture of Official Substances

When used in the manufacture of official substances, water may meet the requirements for drinking water as set forth in the regulations of the U.S. Environmental Protection Agency (potable water).

8.230.30. Water in a Compendial Procedure

When water is called for in a compendial procedure, the *USP* article Purified Water shall be used unless otherwise specified. Definitions for *High-Purity Water* and *Carbon Dioxide-Free Water* are provided in *Containers—Glass* ⟨660⟩. Definitions of other types of water are provided in *Water for Pharmaceutical Purposes* ⟨1231⟩.

8.240. Weights and Measures

In general, weights and measures are expressed in the International System of Units (SI) as established and revised by the *Conférence générale des poids et mesures*. For compendial purposes, the term "weight" is considered to be synonymous with "mass."

Molality is designated by the symbol *m* preceded by a number that represents the number of moles of the designated solute contained in 1 kilogram of the designated solvent.

Molarity is designated by the symbol M preceded by a number that represents the number of moles of the designated solute contained in an amount of the designated solvent that is sufficient to prepare 1 liter of solution.

Normality is designated by the symbol N preceded by a number that represents the number of equivalents of the designated solute contained in an amount of the designated solvent that is sufficient to prepare 1 liter of solution.

Symbols commonly employed for SI metric units and other units are as follows:

Bq = becquerel	dL = deciliter
kBq = kilobecquerel	L = liter
MBq = megabecquerel	mL = milliliter[c]
GBq = gigabecquerel	µL = microliter
Ci = curie	Eq = gram-equivalent weight
mCi = millicurie	mEq = milliequivalent
µCi = microcurie	mol = gram-molecular weight (mole)
nCi = nanocurie	Da = dalton (relative molecular mass)
Gy = gray	mmol = millimole
mGy = milligray	Osmol = osmole
m = meter	mOsmol = milliosmole
dm = decimeter	Hz = hertz
cm = centimeter	kHz = kilohertz
mm = millimeter	MHz = megahertz
µm = micrometer (0.001mm)	V = volts
nm = nanometer[a]	MeV = million electron volts
kg = kilogram	keV = kilo-electron volt
g = gram	mV = millivolt
mg = milligram	psi = pounds per square inch
µg; mcg = microgram[b]	Pa = pascal
ng = nanogram	kPa = kilopascal
pg = picogram	g = gravity (in centrifugation)
fg = femtogram	

[a] Previously the symbol mµ (for millimicron) was used.
[b] The symbol µg is used in the *USP* and *NF* to represent micrograms, but micrograms may be represented as "mcg" for labeling and prescribing purposes. The term "gamma," symbolized by γ, frequently is used to represent micrograms in biochemical literature.
[c] One milliliter (mL) is used herein as the equivalent of one cubic centimeter (cc).

9. PRESCRIBING AND DISPENSING

9.10 Use of Metric Units

Prescriptions for compendial articles shall be written to state the quantity and/or strength desired in metric units unless otherwise indicated in the individual monograph (see also *Units of Potency,* section 5.50.10 above). If an amount is prescribed by any other system of measurement, only an amount that is the metric equivalent of the prescribed amount shall be dispensed. Apothecary unit designations on labels and labeling shall not be used.

Accessed from 167.78.4.19 by James Cumbie (ocean22) on Mon Sep 09 15:04:23 EDT 2013

9.20 Changes in Volume

In the dispensing of prescription medications, slight changes in volume owing to variations in room temperatures may be disregarded.

10. PRESERVATION, PACKAGING, STORAGE, AND LABELING

10.10. Storage Under Nonspecific Conditions

If no specific directions or limitations are provided in the *Packaging and Storage* section of an individual *USP* monograph or in the labeling of an article recognized in *USP,* the conditions of storage shall include storage at controlled room temperature, protection from moisture, and, where necessary, protection from light. Such articles shall be protected from moisture, freezing, and excessive heat, and, where necessary, from light during shipping and distribution. Drug substances are exempt from the requirements in this paragraph.

Regardless of quantity, where no specific storage directions or limitations are provided in an individual *NF* monograph or stated in the labeling of an article recognized in *NF,* the conditions of storage and distribution shall include protection from moisture, freezing, excessive heat, and, where necessary, from light.

10.20. Containers

The container is that which holds the article and is or may be in direct contact with the article. The immediate container is that which is in direct contact with the article at all times. The closure is a part of the container.

Before being filled, the container should be clean. Special precautions and cleaning procedures may be necessary to ensure that each container is clean and that extraneous matter is not introduced into or onto the article.

The container does not interact physically or chemically with the article placed in it so as to alter the strength, quality, or purity of the article beyond the official requirements.

The compendial requirements for the use of specified containers apply also to articles as packaged by the pharmacist or other dispenser, unless otherwise indicated in the individual monograph.

10.20.10. Tamper-Evident Packaging

The container or individual carton of a sterile article intended for ophthalmic or otic use, except where extemporaneously compounded for immediate dispensing on prescription, shall be so sealed that the contents cannot be used without obvious destruction of the seal.

Articles intended for sale without prescription are also required to comply with the tamper-evident packaging and labeling requirements of the FDA where applicable.

Preferably, the immediate container and/or the outer container or protective packaging used by a manufacturer or distributor for all dosage forms that are not specifically exempt is designed so as to show evidence of any tampering with the contents.

10.20.20. Light-Resistant Container

A light-resistant container (see *Light Transmission Test* under *Containers—Performance Testing* ⟨671⟩) protects the contents from the effects of light by virtue of the specific properties of the material of which it is composed, including any coating applied to it. Alternatively, a clear and colorless or a translucent container may be made light-resistant by means of an opaque covering, in which case the label of the container bears a statement that the opaque covering is needed until the contents are to be used or administered. Where it is directed to "protect from light" in an individual monograph, preservation in a light-resistant container is intended.

Where an article is required to be packaged in a light-resistant container, and if the container is made light-resistant by means of an opaque covering, a single-use, unit-dose container or mnemonic pack for dispensing may not be removed from the outer opaque covering before dispensing.

10.20.30. Well-Closed Container

A well-closed container protects the contents from extraneous solids and from loss of the article under the ordinary or customary conditions of handling, shipment, storage, and distribution.

10.20.40. Tight Container

A tight container protects the contents from contamination by extraneous liquids, solids, or vapors; from loss of the article; and from efflorescence, deliquescence, or evaporation under the ordinary or customary conditions of handling, shipment, storage, and distribution; and is capable of tight reclosure. Where a tight container is specified, it may be replaced by a hermetic container for a single dose of an article.

A gas cylinder is a metallic container designed to hold a gas under pressure. As a safety measure, for carbon dioxide, cyclopropane, helium, nitrous oxide, and oxygen, the Pin-Index Safety System of matched fittings is recommended for cylinders of Size E or smaller.

[NOTE—Where packaging and storage in a *tight container* or a *well-closed container* is specified in the individual monograph, the container used for an article when dispensed on prescription meets the requirements under *Containers—Performance Testing* ⟨671⟩.]

10.20.50. Hermetic Container

A hermetic container is impervious to air or any other gas under the ordinary or customary conditions of handling, shipment, storage, and distribution.

10.20.60. Single-Unit Container

A single-unit container is one that is designed to hold a quantity of drug product intended for administration as a single dose or a single finished device intended for use promptly after the container is opened. Preferably, the immediate container and/or the outer

Copyright (c) 2013 The United States Pharmacopeial Convention. All rights reserved.

container or protective packaging shall be so designed as to show evidence of any tampering with the contents. Each single-unit container shall be labeled to indicate the identity, quantity and/or strength, name of the manufacturer, lot number, and expiration date of the article.

10.20.70. Single-Dose Container

A single-dose container is a single-unit container for articles intended for parenteral administration only. A single-dose container is labeled as such. Examples of single-dose containers include prefilled syringes, cartridges, fusion-sealed containers, and closure-sealed containers when so labeled. (See also *Containers for Injections* under *Injections* ⟨1⟩.)

10.20.80. Unit-Dose Container

A unit-dose container is a single-unit container for articles intended for administration by other than the parenteral route as a single dose, direct from the container.

10.20.90. Unit-of-Use Container

A unit-of-use container is one that contains a specific quantity of a drug product and that is intended to be dispensed as such without further modification except for the addition of appropriate labeling. A unit-of-use container is labeled as such.

10.20.100. Multiple-Unit Container

A multiple-unit container is a container that permits withdrawal of successive portions of the contents without changing the strength, quality, or purity of the remaining portion.

10.20.110. Multiple-Dose Container

A multiple-dose container is a multiple-unit container for articles intended for parenteral administration only. (See also *Containers for Injections* under *Injections* ⟨1⟩).

10.20.120. Requirements under the Poison Prevention Packaging Act (PPPA)

This act (see the website, www.cpsc.gov/businfo/pppa.html) requires special packaging of most human oral prescription drugs, oral controlled drugs, certain non-oral prescription drugs, certain dietary supplements, and many over-the-counter (OTC) drug preparations in order to protect the public from personal injury or illness from misuse of these preparations (16 CFR § 1700.14).

The immediate packaging of substances regulated under the PPPA shall comply with the special packaging standards (16 CFR § 1700.15 and 16 CFR § 1700.20). The PPPA regulations for special packaging apply to all packaging types including reclosable, nonclosable, and unit-dose types.

Special packaging is not required for drugs dispensed within a hospital setting for inpatient administration. Manufacturers and packagers of bulk-packaged prescription drugs do not have to use special packaging if the drug will be repackaged by the pharmacist. PPPA-regulated prescription drugs may be dispensed in non–child-resistant packaging upon the request of the purchaser or when directed in a legitimate prescription (15 U.S.C. § 1473).

Manufacturers or packagers of PPPA-regulated OTC preparations are allowed to package one size in non–child-resistant packaging as long as popular-size, special packages are also supplied. The non–child-resistant package requires special labeling (16 CFR § 1700.5).

Various types of child-resistant packages are covered in ASTM International Standard D-3475, Standard Classification of Child-Resistant Packaging. Examples are included as an aid in the understanding and comprehension of each type of classification.

10.30. Storage Temperature and Humidity

Specific directions are stated in some monographs with respect to the temperatures and humidity at which official articles shall be stored and distributed (including the shipment of articles to the consumer) when stability data indicate that storage and distribution at a lower or a higher temperature and a higher humidity produce undesirable results. Such directions apply except where the label on an article states a different storage temperature on the basis of stability studies of that particular formulation. Where no specific storage directions or limitations are provided in the individual monograph, but the label of an article states a storage temperature that is based on stability studies of that particular formulation, such labeled storage directions apply. The conditions are defined by the following terms.

10.30.10. Freezer

"Freezer" indicates a place in which the temperature is maintained thermostatically between –25° and –10° (–13° and 14°F).

10.30.20. Cold

Any temperature not exceeding 8° (46°F) is "cold." A "refrigerator" is a cold place in which the temperature is maintained thermostatically between 2° and 8° (36° and 46°F).

10.30.30. Cool

Any temperature between 8° and 15° (46° and 59°F) is"cool." An article for which storage in a *cool place* is directed may, alternatively, be stored and distributed in a *refrigerator,* unless otherwise specified by the individual monograph.

10.30.40. Controlled Cold Temperature

"Controlled cold temperature" is defined as temperature maintained thermostatically between 2° and 8° (36° and 46° F), that allows for excursions in temperature between 0° and 15° (32° and 59° F) that may be experienced during storage, shipping, and distribution such that the allowable calculated mean kinetic temperature is not more than 8° (46° F). Transient spikes up to 25° (77° F) may be permitted if the manufacturer so instructs and provided that such spikes do not exceed 24 hours unless supported by stability data or the manufacturer instructs otherwise.

Accessed from 167.78.4.19 by James Cumbie (ocean22) on Mon Sep 09 15:04:23 EDT 2013

10.30.50. Room Temperature

"Room temperature" indicates the temperature prevailing in a working area.

10.30.60. Controlled Room Temperature

"Controlled room temperature" indicates a temperature maintained thermostatically that encompasses the usual and customary working environment of 20° to 25° (68° to 77°F); that results in a mean kinetic temperature calculated to be not more than 25°; and that allows for excursions between 15° and 30° (59° and 86°F) that are experienced in pharmacies, hospitals, and warehouses. Provided the mean kinetic temperature remains in the allowed range, transient spikes up to 40° are permitted as long as they do not exceed 24 hours. Spikes above 40° may be permitted if the manufacturer so instructs. Articles may be labeled for storage at "controlled room temperature" or at "up to 25°", or other wording based on the same mean kinetic temperature. The mean kinetic temperature is a calculated value that may be used as an isothermal storage temperature that simulates the nonisothermal effects of storage temperature variations.

An article for which storage at *controlled room temperature* is directed may, alternatively, be stored and distributed in a *cool place,* unless otherwise specified in the individual monograph or on the label.

10.30.70. Warm

Any temperature between 30° and 40° (86° and 104°F) is "warm."

10.30.80. Excessive Heat

"Excessive heat" means any temperature above 40° (104°F).

10.30.90. Protection From Freezing

Where, in addition to the risk of breakage of the container, freezing subjects an article to loss of strength or potency, or to destructive alteration of its characteristics, the container label bears an appropriate instruction to protect the article from freezing.

10.30.100. Dry Place

The term "dry place" denotes a place that does not exceed 40% average relative humidity at *Controlled Room Temperature* or the equivalent water vapor pressure at other temperatures. The determination may be made by direct measurement at the place or may be based on reported climatic conditions. Determination is based on not less than 12 equally spaced measurements that encompass either a season, a year, or, where recorded data demonstrate, the storage period of the article. There may be values of up to 45% relative humidity provided that the average value is 40% relative humidity.

Storage in a container validated to protect the article from moisture vapor, including storage in bulk, is considered storage in a dry place.

10.40. Labeling

The term "labeling" designates all labels and other written, printed, or graphic matter upon an immediate container of an article or upon, or in, any package or wrapper in which it is enclosed, except any outer shipping container. The term "label" designates that part of the labeling upon the immediate container.

A shipping container containing a single article, unless such container is also essentially the immediate container or the outside of the consumer package, is labeled with a minimum of product identification (except for controlled articles), lot number, expiration date, and conditions for storage and distribution.

Articles in these compendia are subject to compliance with such labeling requirements as may be promulgated by governmental bodies in addition to the compendial requirements set forth for the articles.

10.40.10. Amount of Ingredient Per Dosage Unit

The strength of a drug product is expressed on the container label in terms of micrograms or milligrams or grams or percentage of the therapeutically active moiety or drug substance, whichever form is used in the title, unless otherwise indicated in an individual monograph. Both the active moiety and drug substance names and their equivalent amounts are then provided in the labeling.

Official articles in capsule, tablet, or other unit dosage form shall be labeled to express the quantity of each active ingredient or recognized nutrient contained in each such unit; except that, in the case of unit-dose oral solutions or suspensions, whether supplied as liquid preparations or as liquid preparations that are constituted from solids upon addition of a designated volume of a specific diluent, the label shall express the quantity of each active ingredient or recognized nutrient delivered under the conditions prescribed in *Deliverable Volume* ⟨698⟩. Official drug products not in unit dosage form shall be labeled to express the quantity of each active ingredient in each milliliter or in each gram, or to express the percentage of each such ingredient (see 8.140., *Percentage Concentrations*), except that oral liquids or solids intended to be constituted to yield oral liquids may, alternatively, be labeled in terms of each 5-mL portion of the liquid or resulting liquid. Unless otherwise indicated in a monograph or chapter, such declarations of strength or quantity shall be stated only in metric units. See also 5.50.10., *Units of Potency (Biological)*.

10.40.20. Use of Leading and Terminal Zeros

To help minimize the possibility of errors in the dispensing and administration of drugs, the quantity of active ingredient when expressed in whole numbers shall be shown without a decimal point that is followed by a terminal zero (e.g., express as 4 mg [not 4.0 mg]). The quantity of active ingredient when expressed as a decimal number smaller than 1 shall be shown with a zero preceding the decimal point (e.g., express as 0.2 mg [not .2 mg]).

10.40.30. Labeling of Salts of Drugs

It is an established principle that official articles shall have only one official title. For purposes of saving space on labels, and because chemical symbols for the most common inorganic salts of drugs are well known to practitioners as synonymous with the written forms, the following alternatives are permitted in labeling official articles that are salts: HCl for hydrochloride; HBr for

Copyright (c) 2013 The United States Pharmacopeial Convention. All rights reserved.

hydrobromide; Na for sodium; and K for potassium. The symbols Na and K are intended for use in abbreviating names of the salts of organic acids, but these symbols are not used where the word Sodium or Potassium appears at the beginning of an official title (e.g., Phenobarbital Na is acceptable, but Na Salicylate is not to be written).

10.40.40. Labeling Vitamin-Containing Products

The vitamin content of an official drug product shall be stated on the label in metric units per dosage unit. The amounts of vitamins A, D, and E may be stated also in USP Units. Quantities of vitamin A declared in metric units refer to the equivalent amounts of retinol (vitamin A alcohol). The label of a nutritional supplement shall bear an identifying lot number, control number, or batch number.

10.40.50. Labeling Botanical-Containing Products

The label of an herb or other botanical intended for use as a dietary supplement bears the statement, "If you are pregnant or nursing a baby, seek the advice of a health professional before using this product."

10.40.60. Labeling Parenteral And Topical Preparations

The label of a preparation intended for parenteral or topical use states the names of all added substances (see 5.20., *Added Substances, Excipients, and Ingredients* and see *Labeling* under *Injections* ⟨1⟩), and, in the case of parenteral preparations, also their amounts or proportions, except that for substances added for adjustment of pH or to achieve isotonicity, the label may indicate only their presence and the reason for their addition.

10.40.70. Labeling Electrolytes

The concentration and dosage of electrolytes for replacement therapy (e.g., sodium chloride or potassium chloride) shall be stated on the label in milliequivalents (mEq). The label of the product shall indicate also the quantity of ingredient(s) in terms of weight or percentage concentration.

10.40.80. Labeling Alcohol

The content of alcohol in a liquid preparation shall be stated on the label as a percentage (v/v) of C_2H_5OH.

10.40.90. Special Capsules and Tablets

The label of any form of Capsule or Tablet intended for administration other than by swallowing intact bears a prominent indication of the manner in which it shall be used.

10.40.100. Expiration Date and Beyond-Use Date

The label of an official drug product or nutritional or dietary supplement product shall bear an expiration date. All articles shall display the expiration date so that it can be read by an ordinary individual under customary conditions of purchase and use. The expiration date shall be prominently displayed in high contrast to the background or sharply embossed, and easily understood (e.g., "EXP 6/08," "Exp. June 08," or "Expires 6/08"). [NOTE—For additional information and guidance, refer to the Consumer Healthcare Products Association's *Voluntary Codes and Guidelines of the Self-Medication Industry.*]

The monographs for some preparations state how the expiration date that shall appear on the label shall be determined. In the absence of a specific requirement in the individual monograph for a drug product or nutritional supplement, the label shall bear an expiration date assigned for the particular formulation and package of the article, with the following exception: the label need not show an expiration date in the case of a drug product or nutritional supplement packaged in a container that is intended for sale without prescription and the labeling of which states no dosage limitations, and which is stable for not less than 3 years when stored under the prescribed conditions.

Where an official article is required to bear an expiration date, such article shall be dispensed solely in, or from, a container labeled with an expiration date, and the date on which the article is dispensed shall be within the labeled expiry period. The expiration date identifies the time during which the article may be expected to meet the requirements of the compendial monograph, provided it is kept under the prescribed storage conditions. The expiration date limits the time during which the article may be dispensed or used. Where an expiration date is stated only in terms of the month and the year, it is a representation that the intended expiration date is the last day of the stated month. The beyond-use date is the date after which an article shall not be used. The dispenser shall place on the label of the prescription container a suitable beyond-use date to limit the patient's use of the article based on any information supplied by the manufacturer and the *General Notices*. The beyond-use date placed on the label shall not be later than the expiration date on the manufacturer's container.

For articles requiring constitution before use, a suitable beyond-use date for the constituted product shall be identified in the labeling.

For all other dosage forms, in determining an appropriate period of time during which a prescription drug may be retained by a patient after its dispensing, the dispenser shall take into account, in addition to any other relevant factors, the nature of the drug; the container in which it was packaged by the manufacturer and the expiration date thereon; the characteristics of the patient's container, if the article is repackaged for dispensing; the expected storage conditions to which the article may be exposed; any unusual storage conditions to which the article may be exposed; and the expected length of time of the course of therapy. The dispenser shall, on taking into account the foregoing, place on the label of a multiple-unit container a suitable beyond-use date to limit the patient's use of the article. Unless otherwise specified in the individual monograph, or in the absence of stability data to the contrary, such beyond-use date shall be not later than (a) the expiration date on the manufacturer's container, or (b) 1 year from the date the drug is dispensed, whichever is earlier. For nonsterile solid and liquid dosage forms that are packaged in single-unit and unit-dose containers, the beyond-use date shall be 1 year from the date the drug is packaged into the single-unit or unit-dose container or the expiration date on the manufacturer's container, whichever is earlier, unless stability data or the manufacturer's labeling indicates otherwise.

Accessed from 167.78.4.19 by James Cumbie (ocean22) on Mon Sep 09 15:04:23 EDT 2013

The dispenser shall maintain the facility where the dosage forms are packaged and stored, at a temperature such that the mean kinetic temperature is not greater than 25°. The plastic material used in packaging the dosage forms shall afford better protection than polyvinyl chloride, which does not provide adequate protection against moisture permeation. Records shall be kept of the temperature of the facility where the dosage forms are stored, and of the plastic materials used in packaging.

10.40.100.1. Compounded Preparations

The label on the container or package of an official compounded preparation shall bear a beyond-use date. The beyond-use date is the date after which a compounded preparation is not to be used. Because compounded preparations are intended for administration immediately or following short-term storage, their beyond-use dates may be assigned based on criteria different from those applied to assigning expiration dates to manufactured drug products.

The monograph for an official compounded preparation typically includes a beyond-use requirement that states the time period following the date of compounding during which the preparation, properly stored, may be used. In the absence of stability information that is applicable to a specific drug and preparation, recommendations for maximum beyond-use dates have been devised for nonsterile compounded drug preparations that are packaged in tight, light-resistant containers and stored at controlled room temperature unless otherwise indicated (see *Stability Criteria and Beyond-Use Dating* under *Stability of Compounded Preparations* in the general test chapter *Pharmaceutical Compounding—Nonsterile Preparations* ⟨795⟩).

10.50. Guidelines for Packaging and Storage Statements in *USP–NF* Monographs

In order to provide users of the *USP* and *NF* with proper guidance on how to package and store official articles, every monograph in the *USP* and *NF* shall have a packaging and storage specification.

For the packaging portion of the statement, the choice of containers is given in this section 10, *Preservation, Packaging, Storage, and Labeling,* and includes *Light-Resistant Container, Well-Closed Container, Tight Container, Hermetic Container, Single-Unit Container, Single-Dose Container, Unit-Dose Container,* and *Unit-of-Use Container.* For most preparations, the choice is determined by the container in which it shall be dispensed (e.g., tight, well-closed, hermetic, unit-of-use, etc.). For drug substances, the choice would appear to be tight, well-closed, or, where needed, a light-resistant container. For excipients, given their typical nature as large-volume commodity items, with containers ranging from drums to tank cars, a well-closed container is an appropriate default. Therefore, in the absence of data indicating a need for a more protective class of container, the phrase "Preserve in well-closed containers" should be used as a default for excipients.

Copyright (c) 2013 The United States Pharmacopeial Convention. All rights reserved.

Annotated List

General Chapters Affected by Changes Appearing in This Supplement

Page citations refer to the pages of this Supplement of USP on Compounding. Note—In the lists below, if a section is new or if a subsection is added to or deleted from an existing section, it is labeled as such in parentheses after the section or subsection name. Items on this list that appear without the designation "new", "added", or "deleted" are items in which changes have been appear without the designation "new", "added", or "deleted" are items in which changes have been made to existing official text.

June 2013 Second Supplement current with USP 36—NF 31

⟨41⟩ Balances, 113

⟨698⟩ Deliverable Volume, 199

Introduction, *Purpose*, *Scope*, *Density Determination*, *Test Preparations*, and *Procedure*

⟨1251⟩ Weighing on an Analytical Balance, 361

Feb 2013 First Supplement current with USP 36—NF 31

⟨841⟩ Specific Gravity, 224

Introduction

⟨1231⟩ Water for Pharmaceutical Purposes, 337

Types of Water and *Chemical Considerations*

Accessed from 167.78.4.19 by James Cumbie (ocean22) on Mon Sep 09 15:04:23 EDT 2013

Section 2

⟨795⟩ PHARMACEUTICAL COMPOUNDING—NONSTERILE PREPARATIONS

INTRODUCTION

The purpose of this chapter is to provide compounders with guidance on applying good compounding practices for the preparation of nonsterile compounded formulations for dispensing and/or administration to humans or animals. Compounding is an integral part of pharmacy practice and is essential to the provision of healthcare. This chapter and applicable monographs on formulation help define good compounding practices. Furthermore, this chapter provides general information to enhance the compounder's ability in the compounding facility to extemporaneously compound preparations that are of acceptable strength, quality, and purity. Pharmacists, other healthcare professionals, and others engaged in the compounding of drug preparations should comply with applicable state and federal compounding laws, regulations, and guidelines.

DEFINITIONS

ACTIVE PHARMACEUTICAL INGREDIENT (API)—Any substance or mixture of substances intended to be used in the compounding of a drug preparation, thereby becoming the active ingredient in that preparation and furnishing pharmacological activity or other direct effect in the diagnosis, cure, mitigation, treatment, or prevention of disease in humans and animals or affecting the structure and function of the body.

ADDED SUBSTANCES—Ingredients that are necessary to compound a preparation but are not intended or expected to cause a pharmacologic response if administered alone in the amount or concentration contained in a single dose of the compounded preparation. The term is used synonymously with the terms *inactive ingredients, excipients,* and *pharmaceutical ingredients.*

BEYOND-USE DATE (BUD)—The date after which a compounded preparation should not to be used; determined from the date the preparation is compounded.

COMPONENT—Any ingredient used in the compounding of a drug preparation, including any active ingredient or added substance that is used in its preparation.

COMPOUNDER—A professional authorized by the appropriate jurisdiction to perform compounding pursuant to a prescription or medication order by a licensed prescriber.

COMPOUNDING—The preparation, mixing, assembling, altering, packaging, and labeling of a drug, drug-delivery device, or device in accordance with a licensed practitioner's prescription, medication order, or initiative based on the practitioner/patient/pharmacist/compounder relationship in the course of professional practice. Compounding includes the following:

- Preparation of drug dosage forms for both human and animal patients
- Preparation of drugs or devices in anticipation of prescription drug orders based on routine, regularly observed prescribing patterns
- Reconstitution or manipulation of commercial products that may require the addition of one or more ingredients
- Preparation of drugs or devices for the purposes of, or as an incident to, research (clinical or academic), teaching, or chemical analysis
- Preparation of drugs and devices for prescriber's office use where permitted by federal and state law

HAZARDOUS DRUG—Any drug identified by at least one of the following six criteria:

- Carcinogenicity
- Teratogenicity or developmental toxicity
- Reproductive toxicity in humans
- Organ toxicity at low doses in humans or animals
- Genotoxicity
- New drugs that mimic existing hazardous drugs in structure or toxicity [for examples see current National Institute for Occupational Safety and Health (NIOSH) publications]

MANUFACTURING—The production, propagation, conversion, or processing of a drug or device, either directly or indirectly, by extraction of the drug from substances of natural origin or by means of chemical or biological synthesis. Manufacturing may also include any packaging or repackaging of the substance(s) or labeling or relabeling of containers for resale by pharmacies, practitioners, or other persons.

Copyright (c) 2013 The United States Pharmacopeial Convention. All rights reserved.

PREPARATION—For the purposes of this chapter, a compounded drug dosage form or dietary supplement or a device to which a compounder has introduced a drug. This term will be used to describe compounded formulations; the term *product* will be used to describe manufactured pharmaceutical dosage forms. (For the definitions of *official substance* and *official products*, see *General Notices and Requirements*.)

STABILITY—The extent to which a preparation retains, within specified limits and throughout its period of storage and use, the same properties and characteristics that it possessed at the time of compounding (see *Stability Considerations in Dispensing Practice* ⟨1191⟩, the table *Criteria for Acceptable Levels of Stability*)

VEHICLE—A component for internal or external use that is used as a carrier or diluent in which liquids, semisolids, or solids are dissolved or suspended. Examples include, but are not limited to, water, syrups, elixirs, oleaginous liquids, solid and semisolid carriers, and proprietary products.

CATEGORIES OF COMPOUNDING

In the three general categories of nonsterile compounding described in this section, different levels of experience, training, and physical facilities are associated with each category.

Criteria used to determine overall classification include:

- degree of difficulty or complexity of the compounding process
- stability information and warnings
- packaging and storage requirements
- dosage forms
- complexity of calculations
- local versus systemic biological disposition
- level of risk to the compounder
- potential for risk of harm to the patient

See *Pharmaceutical Compounding—Sterile Preparations* ⟨797⟩ for risk levels associated with sterile preparations. Specialty areas such as radiopharmaceuticals require special training and are beyond the scope of this chapter. Compounders shall acquire and maintain knowledge and skills in all areas (e.g., dosage form, patient population, and medical specialty) for which they compound.

Description of Categories

Simple—Making a preparation that has a *United States Pharmacopeia* (*USP*) compounding monograph or that appears in a peer-reviewed journal article that contains specific quantities of all components, compounding procedure and equipment, and stability data for that formulation with appropriate BUDs; or reconstituting or manipulating commercial products that may require the addition of one or more ingredients as directed by the manufacturer. Examples include *Captopril Oral Solution*, *Indomethacin Topical Gel*, and *Potassium Bromide Oral Solution, Veterinary*.

Moderate—Making a preparation that requires special calculations or procedures (such as calibration of dosage unit mold cavities) to determine quantities of components per preparation or per individualized dosage units; or making a preparation for which stability data for that specific formulation are not available. Examples include *Morphine Sulfate Suppositories*, diphenhydramine hydrochloride troches, and mixing two or more manufactured cream products when the stability of the mixture is not known.

Complex—Making a preparation that requires special training, environment, facilities, equipment, and procedures to ensure appropriate therapeutic outcomes. Examples of possible complex preparation types include transdermal dosage forms, modified-release preparations, and some inserts and suppositories for systemic effects.

RESPONSIBILITIES OF THE COMPOUNDER

The compounder is responsible for compounding preparations of acceptable strength, quality, and purity and in accordance with the prescription or medication order. The compounder is also responsible for dispensing the finished preparation, with appropriate packaging and labeling, and in compliance with the requirements established by the applicable state agencies, state boards of pharmacy, federal law, and other regulatory agencies where appropriate. Individuals who are engaged in drug or dietary supplement compounding shall be proficient in compounding and should continually expand their compounding knowledge by participating in seminars and/or studying appropriate literature. They shall be knowledgeable about the contents of this chapter and should be familiar with *Pharmaceutical Compounding—Sterile Preparations* ⟨797⟩, *Pharmaceutical Dosage Forms* ⟨1151⟩, *Pharmaceutical Calculations in Prescription Compounding* ⟨1160⟩, *Quality Assurance in Pharmaceutical Compounding* ⟨1163⟩, *Prescription Balances and Volumetric Apparatus* ⟨1176⟩, *Stability Considerations in a Dispensing Practice* ⟨1191⟩, *Written Prescription Drug Information—Guidelines* ⟨1265⟩, and all applicable compounding laws, guidelines, and standards.

To ensure the quality of compounded preparations, compounders shall adhere to the following general principles (additional information on these general principles is provided in the sections that follow).

General Principles of Compounding

1. Personnel are appropriately trained and are capable of performing and qualified to perform their assigned duties. Such training should be documented.

Accessed from 167.78.4.19 by James Cumbie (ocean22) on Mon Sep 09 15:04:23 EDT 2013

2. Compounding ingredients of the appropriate identity, purity, and quality are purchased from reliable sources and are properly stored according to manufacturer specifications or *USP* standards.
3. Bulk component containers are labeled with appropriate Occupational Safety and Health Administration (OSHA) hazard communication labels (see OSHA.gov), and Material Safety Data Sheets (MSDSs) are available to compounding personnel for all drugs and chemicals used in compounding.
4. All equipment used in compounding is clean, properly maintained, and used appropriately.
5. The compounding environment is suitable for its intended purpose; and procedures are implemented to prevent cross-contamination, especially when compounding with drugs (e.g., hazardous drugs and known allergens like penicillin) that require special precautions.
6. Only authorized personnel are allowed in the immediate vicinity of the drug compounding operations.
7. There is assurance that processes are always carried out as intended or specified and are reproducible.
8. Compounding conditions and procedures are adequate for preventing errors.
9. All aspects of compounding are appropriately documented.
10. Adequate procedures and records exist for investigating and correcting failures or problems in compounding, testing, or the preparation itself.

COMPOUNDING PROCESS

The compounder is responsible for ensuring that each individual incidence of compounding meets the criteria given in this section (additional information on these criteria is provided in the sections that follow).

Criteria When Compounding Each Drug Preparation

1. The dose, safety, and intended use of the preparation or device has been evaluated for suitability in terms of:
   - the chemical and physical properties of the components
   - dosage form
   - therapeutic appropriateness and route of administration, including local and systemic biological disposition
   - legal limitations, if any
2. A Master Formulation Record should be created before compounding a preparation for the first time. This record shall be followed each time that preparation is made. In addition, a Compounding Record should be completed each time a preparation is compounded.
3. Ingredients used in the formulation have their expected identity, quality, and purity. If the formulation is for humans, ingredients are not on a list of federally recognized drugs or specific drug products that have been withdrawn or removed from the market for safety or efficacy reasons (see www.FDA.gov). If the formulation is for food-producing animals, ingredients are not on a list of components prohibited for use in food-producing animals. Certificates of Analysis, when applicable, and MSDSs have been consulted for all ingredients used.
4. Compounding is done in an appropriately clean and sanitized area dedicated to this activity (see the section *Compounding Facilities*).
5. Only one preparation is compounded at one time in a specific workspace.
6. Appropriate compounding equipment has been selected and inspected for cleanliness and correct functioning and is properly used.
7. A reliable BUD is established to ensure that the finished preparation has its accepted potency, purity, quality, and characteristics, at least until the labeled BUD.
8. Personnel engaged in compounding maintain good hand hygiene and wear clean clothing appropriate to the type of compounding performed (e.g., hair bonnets, coats, gowns, gloves, facemasks, shoes, aprons, or other items) as needed for protection of personnel from chemical exposures and for prevention of drug contamination.
9. The preparation is made in accordance with this chapter, other official standards referenced in this chapter, and relevant scientific data and information.
10. Critical processes (including but not limited to weighing, measuring, and mixing) are verified by the compounder to ensure that procedures, when used, will consistently result in the expected qualities in the finished preparation.
11. The final preparation is assessed using factors such as weight, adequacy of mixing, clarity, odor, color, consistency, pH, and analytical testing as appropriate; and this information is recorded on the Compounding Record (see Chapter ⟨1163⟩).
12. The preparation is packaged as recommended in the *Packaging and Drug Preparation Containers* section of this chapter.
13. The preparation container is labeled according to all applicable state and federal laws. The labeling shall include the BUD and storage and handling information. The labeling should indicate that "this is a compounded preparation."
14. The Master Formulation Record and the Compounding Record have been reviewed by the compounder to ensure that errors have not occurred in the compounding process and that the preparation is suitable for use.
15. The preparation is delivered to the patient or caregiver with the appropriate consultation.

COMPOUNDING FACILITIES

Compounding facilities shall have an adequate space that is specifically designated for compounding of prescriptions. This space shall provide for the orderly placement of equipment and materials to prevent mixups among ingredients, containers, labels, in-process materials, and finished preparations and is designed, arranged, and used to prevent adventitious cross-contamination. Areas

Copyright (c) 2013 The United States Pharmacopeial Convention. All rights reserved.

used for sterile preparations shall be separated and distinct from the nonsterile compounding area (see Chapter ⟨797⟩, *Environmental Quality and Control*).

Potable water shall be supplied for hand and equipment washing. This water meets the standards prescribed in the Environmental Protection Agency's National Primary Drinking Water Regulations (40 CFR Part 141). *Purified Water* (see *Purified Water* monograph) shall be used for compounding nonsterile drug preparations when formulations indicate the inclusion of water. *Purified Water* should be used for rinsing equipment and utensils. In those cases when a water is used to prepare a sterile preparation, follow the appropriate monographs and general chapters (see *Water for Pharmaceutical Purposes* ⟨1231⟩).

The plumbing system shall be free of defects that could contribute to contamination of any compounded preparation. Adequate hand and equipment washing facilities shall be easily accessible to the compounding areas. Such facilities shall include, but are not limited to, hot and cold water, soap or detergent, and an air-drier or single-use towels. The areas used for compounding shall be maintained in clean, orderly, and sanitary conditions and shall be maintained in a good state of repair. Waste shall be held and disposed of in a sanitary and timely manner and in accordance with local, state, and federal guidelines.

The entire compounding and storage area should be well lighted. Heating, ventilation, and air conditioning systems shall be controlled to avoid decomposition and contamination of chemicals (see the *General Notices and Requirements*, *Preservation, Packaging, Storage, and Labeling*, *Storage Temperature and Humidity*; and the manufacturers' labeled storage conditions). Appropriate temperature and humidity monitoring should be maintained as required for certain components and compounded dosage forms. All components, equipment, and containers shall be stored off the floor and in a manner to prevent contamination and permit inspection and cleaning of the compounding and storage area.

Hazardous drugs shall be stored, prepared, and handled by appropriately trained personnel under conditions that protect the healthcare workers and other personne. The following are references for the safe handling of antineoplastic and hazardous drugs in healthcare settings:

- OSHA Technical Manual—Section VI: Chapter 2, *Controlling Occupational Exposure to Hazardous Drugs*
- NIOSH Alert: *Preventing Occupational Exposure to Antineoplastic and Other Hazardous Drugs in Health Care Settings* (DHHS (NIOSH) Publication No. 2004-165) and updates.

Disposal of all hazardous drug wastes shall comply with all applicable federal and state regulations. All personnel who perform routine custodial waste removal and cleaning activities in storage and preparation areas for hazardous drugs shall be trained in appropriate procedures to protect themselves and prevent contamination.

COMPOUNDING EQUIPMENT

The equipment and utensils used for compounding of a drug preparation shall be of appropriate design and capacity. The equipment shall be of suitable composition that the surfaces that contact components are neither reactive, additive, nor sorptive and therefore will not affect or alter the purity of the compounded preparations. The types and sizes of equipment depend on the dosage forms and the quantities compounded (see Chapter ⟨1176⟩ and equipment manufacturers' instruction manuals).

Equipment shall be stored to protect it from contamination and shall be located to facilitate its use, maintenance, and cleaning. Automated, mechanical, electronic, and other types of equipment used in compounding or testing of compounded preparations shall be routinely inspected, calibrated as necessary, and checked to ensure proper performance. Immediately before compounding operations, the equipment shall be inspected by the compounder to determine its suitability for use. After use, the equipment shall be appropriately cleaned.

Extra care should be used when cleaning equipment used in compounding preparations that require special precaution (e.g., antibiotics and cytotoxic and other hazardous materials). When possible, special equipment should be dedicated for such use, or when the same equipment is being used for all drug products, appropriate procedures shall be in place to allow meticulous cleaning of equipment before use with other drugs. If possible, disposable equipment should be used to reduce chances of bioburden and cross-contamination.

COMPONENT SELECTION, HANDLING, AND STORAGE

The following guidelines shall be followed when selecting, handling, and storing components for compounded preparations.

1. A *United States Pharmacopeia* (*USP*), *National Formulary* (*NF*), or *Food Chemicals Codex* (*FCC*) substance is the recommended source of ingredients for compounding all preparations.
2. Compounders shall first attempt to use components manufactured in an FDA-registered facility. When components cannot be obtained from an FDA-registered facility, compounders shall use their professional judgment in selecting an acceptable and reliable source and shall establish purity and safety by reasonable means, which should include Certificate of Analysis, manufacturer reputation, and reliability of source.
3. Official compounded preparations are prepared from ingredients that meet requirements of the compendial monograph for those individual ingredients for which monographs are provided. These preparations may be labeled *USP* or *NF* as appropriate.
4. When components of compendial quality are not obtainable, components of high quality such as those that are chemically pure, analytical reagent grade, or American Chemical Society–certified may be used. However, these components should be used cautiously because the standards for analytical reagents or American Chemical Society–grade materials do not consider whether any impurity present raises human or animal safety concerns.
5. For components in containers that have an expiration date from the manufacturer or distributor, the material may be used in compounding before that expiration date (a) when the material is stored in its original container under conditions to avoid decomposition of the chemicals (see Chapter ⟨1191⟩ and ⟨659⟩ *Packaging and Storage Requirements*, unless other conditions are noted on the label), (b) when there is minimal exposure of the remaining material each time material is withdrawn from the container, and (c) when any withdrawals from the container are performed by those trained in the proper handling of the

Accessed from 167.78.4.19 by James Cumbie (ocean22) on Mon Sep 09 15:04:23 EDT 2013

material. If the component has been transferred to a different container, that container shall be identified with the component name, original supplier, lot or control number, transfer date, and expiration date and shall provide integrity that is equivalent to or better than that of the original container.

6. For components that do not have expiration dates assigned by the manufacturer or supplier, the compounder shall label the container with the date of receipt and assign a conservative expiration date, not to exceed three years after receipt, to the component (see the *General Notices and Requirements, Preservation, Packaging, Storage, and Labeling, Labeling*, *Expiration Date and Beyond-Use Date*) based on the nature of the component and its degradation mechanism, the container in which it is packaged, and the storage conditions.
7. If a manufactured drug product is used as the source of active ingredient, the drug product shall be manufactured in an FDA-registered facility, and the manufacturer's product container shall be labeled with a batch control number and expiration date. When compounding with manufactured drug products, the compounder shall consider all ingredients, including excipients, present in the drug product relative to the intended use of the compounded preparation and the effect of manipulating the drug product on the therapeutic appropriateness and stability of the components.
8. If the preparation is intended for use as a dietary or nutritional supplement, then the compounder must adhere to this chapter and must also comply with any federal and state requirements. Generally, dietary supplements are prepared from ingredients that meet *USP, FCC*, or *NF* standards. Where such standards do not exist, substances may be used in dietary supplements if they have been shown to have acceptable food-grade quality using other suitable procedures.
9. When a component is derived from ruminant animals (e.g., bovine, caprine, ovine), the supplier shall provide written assurance that the component is in compliance with all federal laws governing processing, use, and importation requirements for these materials.
10. When compounding for humans, the compounder should consult the list of components that have been withdrawn or removed from the market for safety or efficacy reasons by FDA (see www.FDA.gov). When compounding for food-producing animals, the compounder should consult the list of components prohibited for use in food-producing animals.
11. All components used in the compounding of preparations must be stored as directed by the manufacturer, or according to *USP, NF,* or *FCC* monograph requirements, in a clean area, and under appropriate temperature and humidity conditions (controlled room temperature, refrigerator, or freezer). All components shall be stored off the floor, handled and stored to prevent contamination, and rotated so that the oldest stock is used first. All containers shall be properly labeled.

STABILITY CRITERIA AND BEYOND-USE DATING

The BUD is the date after which a compounded preparation shall not be used and is determined from the date when the preparation is compounded. Because compounded preparations are intended for administration immediately or following short-term storage, their BUDs are assigned on the basis of criteria different from those applied to assigning expiration dates to manufactured drug products.

BUDs should be assigned conservatively. When assigning a BUD, compounders shall consult and apply drug-specific and general stability documentation and literature when available and should consider:

- the nature of the drug and its degradation mechanism
- the dosage form and its components
- the potential for microbial proliferation in the preparation
- the container in which it is packaged
- the expected storage conditions
- the intended duration of therapy (see the *General Notices and Requirements, Preservation, Packaging, Storage, and Labeling*, *Labeling*, *Expiration Date and Beyond-Use Date*).

When a manufactured product is used as the source of the API for a nonsterile compounded preparation, the product expiration date cannot be used solely to assign a BUD for the compounded preparation. Instead, the compounder shall refer to the manufacturer for stability information and to the literature for applicable information on stability, compatibility, and degradation of ingredients; shall consider stability factors in Chapter ⟨1191⟩; and shall use his or her compounding education and experience. All stability data shall be carefully interpreted in relation to the actual compounded formulation.

At all steps in the compounding, dispensing, and storage process, the compounder shall observe the compounded drug preparation for signs of instability. For more specific details of some of the common physical signs of deterioration (see Chapter ⟨1191⟩, *Observing Products for Evidence of Instability*). However, excessive chemical degradation and other drug concentration loss due to reactions may be invisible more often than visible.

General Guidelines for Assigning Beyond-Use Dates

In the absence of stability information that is applicable to a specific drug and preparation, the following table presents maximum BUDs recommended for (1) nonsterile compounded drug preparations that are packaged in tight, light-resistant containers and stored at controlled room temperature, unless otherwise indicated; and for (2) sterile preparations for which a program of sterility testing is in place (see the *General Notices and Requirements, Preservation, Packaging, Storage, and Labeling*). Drugs or chemicals known to be labile to decomposition will require shorter BUDs.

Copyright (c) 2013 The United States Pharmacopeial Convention. All rights reserved.

BUD by Type of Formulation[a]
For Nonaqueous Formulations—The BUD is not later than the time remaining until the earliest expiration date of any API or 6 months, whichever is earlier.
For Water-Containing Oral Formulations—The BUD is not later than 14 days when stored at controlled cold temperatures.
For Water-Containing Topical/Dermal and Mucosal Liquid and Semisolid Formulations—The BUD is not later than 30 days.

[a] These maximum BUDs are recommended for nonsterile compounded drug preparations in the absence of stability information that is applicable to a specific drug or preparation. The BUD shall not be later than the expiration date on the container of any component.

Susceptible preparations should contain suitable antimicrobial agents to protect against bacteria, yeast, and mold contamination inadvertently introduced during or after the compounding process. When antimicrobial preservatives are contraindicated in such compounded preparations, storage of the preparation at controlled cold temperature is necessary; to ensure proper storage and handling of such compounded preparations by the patient or caregiver, appropriate patient instruction and consultation is essential. Antimicrobial preservatives should not be used as a substitute for good compounding practices.

For information on assigning BUDs when repackaging drug products for dispensing or administration, see the *General Notices and Requirements, Preservation, Packaging, Storage, and Labeling, Labeling*, *Expiration Date and Beyond-Use Date*, and *Packaging and Repackaging—Single-Unit Containers* ⟨1136⟩.

Assurance of sterility in a compounded sterile preparation is mandatory. Compounding and packaging of sterile drugs (including ophthalmic preparations) requires strict adherence to guidelines presented in Chapter ⟨797⟩ and in the manufacturers' labeling instructions.

PACKAGING AND DRUG PREPARATION CONTAINERS

The compounder shall ensure that the containers and container closures used in packaging compounded preparations meet *USP* requirements (see ⟨659⟩ *Packaging and Storage Requirements*; *Containers—Glass* ⟨660⟩; *Containers—Plastics* ⟨661⟩; *Containers—Performance Testing* ⟨671⟩; Chapter ⟨1136⟩); and when available, compounding monographs. Compounders are not expected to perform the tests described in these chapters but should be knowledgeable about the standards described in them. Container suppliers shall supply, upon request, verification of *USP* container compliance. Containers and container closures intended for the compounding of sterile preparations must be handled as described in Chapter ⟨797⟩.

The containers and closures shall be made of suitable clean material in order not to alter the quality, strength, or purity of the compounded drug preparation. The container used depends on the physical and chemical properties of the compounded preparation. Container–drug interaction should be considered for substances that have sorptive or leaching properties.

The containers and closures shall be stored off the floor, handled and stored to prevent contamination, and rotated so that the oldest stock is used first. The containers and container closures shall be stored in such a way as to permit inspection and cleaning of the storage area.

COMPOUNDING DOCUMENTATION

Documentation, written or electronic, enables a compounder, whenever necessary, to systematically trace, evaluate, and replicate the steps included throughout the preparation process of a compounded preparation. All compounders who dispense prescriptions must comply with the record-keeping requirements of their state boards of pharmacy. When the compounder compounds a preparation according to the manufacturer's labeling instructions, then further documentation is not required. All other compounded preparations require further documentation as described in this section.

These records should be retained for the same period of time that is required for any prescription under state law. The record may be a copy of the prescription in written or machine-readable form and should include a Master Formulation Record and a Compounding Record.

Master Formulation Record

This record shall include:

- official or assigned name, strength, and dosage form of the preparation
- calculations needed to determine and verify quantities of components and doses of active pharmaceutical ingredients
- description of all ingredients and their quantities
- compatibility and stability information, including references when available
- equipment needed to prepare the preparation, when appropriate
- mixing instructions that should include:
    1. order of mixing
    2. mixing temperatures or other environmental controls
    3. duration of mixing
    4. other factors pertinent to the replication of the preparation as compounded
- sample labeling information, which shall contain, in addition to legally required information:
    1. generic name and quantity or concentration of each active ingredient
    2. assigned BUD

Accessed from 167.78.4.19 by James Cumbie (ocean22) on Mon Sep 09 15:04:23 EDT 2013

3. storage conditions
4. prescription or control number, whichever is applicable

- container used in dispensing
- packaging and storage requirements
- description of final preparation
- quality control procedures and expected results

Compounding Record

The Compounding Record shall contain:

- official or assigned name, strength, and dosage of the preparation
- Master Formulation Record reference for the preparation
- names and quantities of all components
- sources, lot numbers, and expiration dates of components
- total quantity compounded
- name of the person who prepared the preparation, name of the person who performed the quality control procedures, and name of the compounder who approved the preparation
- date of preparation
- assigned control or prescription number
- assigned BUD
- duplicate label as described in the Master Formulation Record
- description of final preparation
- results of quality control procedures (e.g., weight range of filled capsules, pH of aqueous liquids)
- documentation of any quality control issues and any adverse reactions or preparation problems reported by the patient or caregiver

Standard Operating Procedures

All significant procedures performed in the compounding area should be covered by written standard operating procedures (SOPs). Procedures should be developed for the facility, equipment, personnel, preparation, packaging, and storage of compounded preparations to ensure accountability, accuracy, quality, safety, and uniformity in compounding. Implementing SOPs establishes procedural consistency and also provides a reference for orientation and training of personnel.

Material Safety Data Sheets File

MSDSs shall be readily accessible to all employees working with drug substances or bulk chemicals located on the compounding facility premises. Employees should be instructed on how to retrieve and interpret needed information.

QUALITY CONTROL

The safety, quality, and performance of compounded preparations depend on correct ingredients and calculations, accurate and precise measurements, appropriate formulation conditions and procedures, and prudent pharmaceutical judgment. As a final check, the compounder shall review each procedure in the compounding process. To ensure accuracy and completeness, the compounder shall observe the finished preparation to ensure that it appears as expected and shall investigate any discrepancies and take appropriate corrective action before the prescription is dispensed to the patient.

Compounding Controls

1. The Master Formulation Record, the Compounding Record, and associated written procedures shall be followed in execution of the compounding process. Any deviation in procedures shall be documented.
2. The compounder shall check and recheck each procedure at each stage of the process. If possible, a trained second person should verify each critical step in the compounding process.
3. The compounder shall have established written procedures that describe the tests or examinations conducted on the compounded preparation (e.g., the degree of weight variation among capsules) to ensure their uniformity and integrity.
4. Appropriate control procedures shall be established to monitor the output and to verify the performance of compounding processes and equipment that may be responsible for causing variability in the final compounded preparations.
5. For further guidance on recommended quality control procedures, see Chapter ⟨1163⟩.

PATIENT COUNSELING

At the time of dispensing the prescription, the patient or the patient's agent shall be counseled about proper use, storage, handling, and disposal of the compounded preparation. The patient or the patient's agent shall also be instructed to report any adverse event and to observe and report to the compounder any changes in the physical characteristics of the compounded

Copyright (c) 2013 The United States Pharmacopeial Convention. All rights reserved.

preparation (see Chapter ⟨1191⟩, *Responsibility of the Pharmacist*). The compounder shall investigate and document any reported problem with a compounded preparation and shall take corrective action.

TRAINING

All personnel involved in the compounding, evaluation, packaging, and dispensing of compounded preparations shall be properly trained for the type of compounding conducted. It is the responsibility of the compounder to ensure that a training program has been implemented and that it is ongoing. Compounding personnel should be evaluated at least annually. Steps in the training procedure include the following:

- All employees involved in pharmaceutical compounding shall read and become familiar with this chapter. They should also be familiar with the contents of the *USP Pharmacists' Pharmacopeia* and other relevant publications, including how to read and interpret MSDSs.
- All employees shall read and become familiar with each of the procedures related to compounding, including those involving the facility, equipment, personnel, actual compounding, evaluation, packaging, storage, and dispensing.
- All personnel who compound hazardous drugs shall be fully trained in the storage, handling, and disposal of these drugs. This training shall occur before preparing or handling hazardous drugs. For information on training for personnel who compound hazardous drugs, see the references in *Compounding Facilities* earlier in this chapter.
- All training activities shall be documented. The compounder shall meet with employees to review their work and answer any questions the employees may have concerning compounding procedures.
- The compounder shall demonstrate the procedures for the employee and shall observe and guide the employee throughout the training process. The employee will then repeat the procedure without any assistance from, but under the direct supervision of, the compounder.
- When the employee has demonstrated to the compounder a verbal and functional knowledge of the procedure, then and only then will the employee be permitted to perform the procedure without direct supervision. However, the compounder should be physically present and shall approve all ingredients and their quantities and the final preparation.
- When the compounder is satisfied with the employee's knowledge and proficiency, the compounder will sign the documentation records to show that the employee was appropriately trained.
- The compounder shall continually monitor the work of the employee and ensure that the employee's calculations and work are accurate and adequately performed.
- The compounder is solely responsible for the finished preparation.

COMPOUNDING FOR ANIMAL PATIENTS

A compounder's responsibility for providing patients with high-quality compounded preparations extends beyond the human species. All portions of this chapter apply to compounded preparations formulated for animal patients. Intended use of any animal patient (e.g., companion, performance, food) shall be determined before compounding for that patient.

Because humans can consume animal patients as food, care must be taken to prevent drug residues from entering the human food chain when compounded preparations are used in animal patients. For this reason, all compounders preparing formulations for animals shall possess a functional knowledge of drug regulation and disposition in animal patients. Veterinarians are required by law to provide food-producing animal caregivers with an accurate length of time to withhold treated animal tissues (e.g., meat, milk, eggs) from the human food supply. This length of time is referred to as a withdrawal time (WDT) and must also, by law, be included on the dispensing label of every prescription prepared for a food-producing species.

Drug use in any performance animal is strictly regulated by federal and state governments, in addition to the governing bodies of each of the specific disciplines. Penalties for violation of these rules may be severe for all contributing to the violation, including the veterinarian, pharmacist, and caregiver.

The pharmacist shall be knowledgeable about the individual species' limitations in physiology and metabolic capacity that can result in toxicity when certain drugs or excipients are used in compounded preparations. For this reason, compounders making preparations for animals should use, when possible, formulations specifically developed for animal patients. If such formulations are not available, the compounder shall conduct a literature review to determine whether a specific component of the formula is toxic to the target species. Extrapolating compounding formulations intended for use in humans may not be appropriate for animal species and may contribute to negative outcomes.

Veterinarians and pharmacists making preparations for animal patients should be familiar with all state and federal regulations regarding drug use in animals, including but not limited to the Food, Drug, and Cosmetic Act; the Animal Drug Amendment; the Animal Medicinal Drug Use Clarification Act; and FDA's Compliance Policy Guideline for Compounding of Drugs for Use in Animal Patients.

Accessed from 167.78.4.19 by James Cumbie (ocean22) on Mon Sep 09 15:04:23 EDT 2013

⟨797⟩ PHARMACEUTICAL COMPOUNDING—STERILE PREPARATIONS

INTRODUCTION

The objective of this chapter is to describe conditions and practices to prevent harm, including death, to patients that could result from (1) microbial contamination (nonsterility), (2) excessive bacterial endotoxins, (3) variability in the intended strength of correct ingredients that exceeds either monograph limits for official articles (see "official" and "article" in the *General Notices and Requirements*) or 10% for nonofficial articles, (4) unintended chemical and physical contaminants, and (5) ingredients of inappropriate quality in compounded sterile preparations (CSPs). Contaminated CSPs are potentially most hazardous to patients when administered into body cavities, central nervous and vascular systems, eyes, and joints, and when used as baths for live organs and tissues. When CSPs contain excessive bacterial endotoxins (see *Bacterial Endotoxins Test* ⟨85⟩), they are potentially most hazardous to patients when administered into the central nervous system.

Despite the extensive attention in this chapter to the provision, maintenance, and evaluation of air quality, the avoidance of direct or physical contact contamination is paramount. It is generally acknowledged that direct or physical contact of critical sites of CSPs with contaminants, especially microbial sources, poses the greatest probability of risk to patients. Therefore, compounding personnel must be meticulously conscientious in precluding contact contamination of CSPs both within and outside ISO Class 5 (see *Table 1*) areas.

To achieve the above five conditions and practices, this chapter provides minimum practice and quality standards for CSPs of drugs and nutrients based on current scientific information and best sterile compounding practices. The use of technologies, techniques, materials, and procedures other than those described in this chapter is not prohibited so long as they have been proven to be equivalent or superior with statistical significance to those described herein. The standards in this chapter do not pertain to the *clinical administration* of CSPs to patients via application, implantation, infusion, inhalation, injection, insertion, instillation, and irrigation, which are the routes of administration. Four specific categories of CSPs are described in this chapter: low-risk level, medium-risk level, and high-risk level, and immediate use. Sterile compounding differs from nonsterile compounding (see *Pharmaceutical Compounding—Nonsterile Preparations* ⟨795⟩ and *Good Compounding Practices* ⟨1075⟩) primarily by requiring the maintenance of sterility when compounding exclusively with sterile ingredients and components (i.e., with immediate-use CSPs, low-risk level CSPs, and medium-risk level CSPs) and the achievement of sterility when compounding with nonsterile ingredients and components (i.e., with high-risk level CSPs). Some differences between standards for sterile compounding in this chapter and those for nonsterile compounding in *Pharmaceutical Compounding—Nonsterile Preparations* ⟨795⟩ include, but are not limited to, ISO-classified air environments (see *Table 1*); personnel garbing and gloving; personnel training and testing in principles and practices of aseptic manipulations and sterilization; environmental quality specifications and monitoring; and disinfection of gloves and surfaces of ISO Class 5 (see *Table 1*) sources.

Table 1. ISO Classification of Particulate Matter in Room Air (limits are in particles of 0.5 µm and larger per cubic meter [current ISO] and cubic feet [former Federal Standard No. 209E, FS 209E])*

Class Name		Particle Count	
ISO Class	**U.S. FS 209E**	**ISO, m³**	**FS 209E, ft³**
3	Class 1	35.2	1
4	Class 10	352	10
5	Class 100	3,520	100
6	Class 1,000	35,200	1,000
7	Class 10,000	352,000	10,000
8	Class 100,000	3,520,000	100,000

*Adapted from former Federal Standard No. 209E, General Services Administration, Washington, DC, 20407 (September 11, 1992) and ISO 14644-1:1999, Cleanrooms and associated controlled environments—Part 1: Classification of air cleanliness. For example, 3,520 particles of 0.5 µm per m³ or larger (ISO Class 5) is equivalent to 100 particles per ft³ (Class 100) (1 m³ = 35.2 ft³).

The standards in this chapter are intended to apply to all persons who prepare CSPs and all places where CSPs are prepared (e.g., hospitals and other healthcare institutions, patient treatment clinics, pharmacies, physicians' practice facilities, and other locations and facilities in which CSPs are prepared, stored, and transported). Persons who perform sterile compounding include pharmacists, nurses, pharmacy technicians, and physicians. These terms recognize that most sterile compounding is performed by or under the supervision of pharmacists in pharmacies and also that this chapter applies to all healthcare personnel who prepare, store, and transport CSPs. For the purposes of this chapter, CSPs include any of the following:

(1) Compounded biologics, diagnostics, drugs, nutrients, and radiopharmaceuticals, including but not limited to the following dosage forms that must be sterile when they are administered to patients: aqueous bronchial and nasal inhalations, baths and soaks for live organs and tissues, injections (e.g., colloidal dispersions, emulsions, solutions, suspensions), irrigations for wounds and body cavities, ophthalmic drops and ointments, and tissue implants.

(2) Manufactured sterile products that are either prepared strictly according to the instructions appearing in manufacturers' approved labeling (product package inserts) or prepared differently than published in such labeling. [NOTE—The FDA states that "Compounding does not include mixing, reconstituting, or similar acts that are performed in accordance with the directions contained in approved labeling provided by the product's manufacturer and other manufacturer directions consistent with that labeling" [21 USC 321 (k) and (m)]. However, the FDA-approved labeling (product package insert) rarely describes environmental

Copyright (c) 2013 The United States Pharmacopeial Convention. All rights reserved.

quality (e.g., ISO Class air designation, exposure durations to non-ISO classified air, personnel garbing and gloving, and other aseptic precautions by which sterile products are to be prepared for administration). Beyond-use exposure and storage dates or times (see *General Notices and Requirements* and *Pharmaceutical Compounding—Nonsterile Preparations* ⟨795⟩) for sterile products that have been either opened or prepared for administration are not specified in all package inserts for all sterile products. Furthermore, when such durations are specified, they may refer to chemical stability and not necessarily to microbiological purity or safety.]

ORGANIZATION OF THIS CHAPTER

The sections in this chapter are organized to facilitate the practitioner's understanding of the fundamental accuracy and quality practices for preparing CSPs. They provide a foundation for the development and implementation of essential procedures for the safe preparation of low-risk, medium-risk, and high-risk level CSPs and immediate-use CSPs, which are classified according to the potential for microbial, chemical, and physical contamination. The chapter is divided into the following main sections:

- Definitions
- Responsibility of Compounding Personnel
- CSP Microbial Contamination Risk Levels
- Personnel Training and Evaluation in Aseptic Manipulation Skills
- Immediate-Use CSPs
- Single-Dose and Multiple-Dose Containers
- Hazardous Drugs as CSPs
- Radiopharmaceuticals as CSPs
- Allergen Extracts as CSPs
- Verification of Compounding Accuracy and Sterility
- Environmental Quality and Control
- Suggested Standard Operating Procedures (SOPs)
- Elements of Quality Control
- Verification of Automated Compounding Devices (ACDs) for Parenteral Nutrition Compounding
- Finished Preparation Release Checks and Tests
- Storage and Beyond-Use Dating
- Maintaining Sterility, Purity, and Stability of Dispensed and Distributed CSPs
- Patient or Caregiver Training
- Patient Monitoring and Adverse Events Reporting
- Quality Assurance (QA) Program
- Abbreviations and Acronyms
- Appendices I–V

The requirements and recommendations in this chapter are summarized in *Appendix I*. A list of abbreviations and acronyms is included at the end of the main text, before the *Appendices*.

All personnel who prepare CSPs shall be responsible for understanding these fundamental practices and precautions, for developing and implementing appropriate procedures, and for continually evaluating these procedures and the quality of final CSPs to prevent harm.

DEFINITIONS

Ante-Area—An ISO Class 8 (see *Table 1*) or better area where personnel hand hygiene and garbing procedures, staging of components, order entry, CSP labeling, and other high-particulate-generating activities are performed. It is also a transition area that (1) provides assurance that pressure relationships are constantly maintained so that air flows from clean to dirty areas and (2) reduces the need for the heating, ventilating, and air-conditioning (HVAC) control system to respond to large disturbances.[1]

Aseptic Processing (see *Microbiological Control and Monitoring of Aseptic Processing Environments* ⟨1116⟩)—A mode of processing pharmaceutical and medical products that involves the separate sterilization of the product and of the package (containers–closures or packaging material for medical devices) and the transfer of the product into the container and its closure under at least ISO Class 5 (see *Table 1*) conditions.

Beyond-Use Date (BUD) (see *General Notices and Requirements* and *Pharmaceutical Compounding—Nonsterile Preparations* ⟨795⟩)—For the purpose of this chapter, the date or time after which a CSP shall not be stored or transported. The date is determined from the date or time the preparation is compounded.

Biological Safety Cabinet (BSC)—A ventilated cabinet for CSPs, personnel, product, and environmental protection having an open front with inward airflow for personnel protection, downward high-efficiency particulate air (HEPA)-filtered laminar airflow for product protection, and HEPA-filtered exhausted air for environmental protection.

Buffer Area—An area where the primary engineering control (PEC) is physically located. Activities that occur in this area include the preparation and staging of components and supplies used when compounding CSPs.

Clean Room (see *Microbiological Control and Monitoring of Aseptic Processing Environments* ⟨1116⟩ and also the definition of *Buffer Area*)—A room in which the concentration of airborne particles is controlled to meet a specified airborne particulate cleanliness class. Microorganisms in the environment are monitored so that a microbial level for air, surface, and personnel gear are not exceeded for a specified cleanliness class.

[1] See *American Society of Heating, Refrigerating and Air-Conditioning Engineers, Inc. (ASHRAE), Laboratory Design Guide.*

Accessed from 167.78.4.19 by James Cumbie (ocean22) on Mon Sep 09 15:04:23 EDT 2013

Compounding Aseptic Containment Isolator (CACI)—A compounding aseptic isolator (CAI) designed to provide worker protection from exposure to undesirable levels of airborne drug throughout the compounding and material transfer processes and to provide an aseptic environment for compounding sterile preparations. Air exchange with the surrounding environment should not occur unless the air is first passed through a microbial retentive filter (HEPA minimum) system capable of containing airborne concentrations of the physical size and state of the drug being compounded. Where volatile hazardous drugs are prepared, the exhaust air from the isolator should be appropriately removed by properly designed building ventilation.

Compounding Aseptic Isolator (CAI)—A form of isolator specifically designed for compounding pharmaceutical ingredients or preparations. It is designed to maintain an aseptic compounding environment within the isolator throughout the compounding and material transfer processes. Air exchange into the isolator from the surrounding environment should not occur unless the air has first passed through a microbially retentive filter (HEPA minimum).[2]

Critical Area—An ISO Class 5 (see *Table 1*) environment.

Critical Site—A location that includes any component or fluid pathway surfaces (e.g., vial septa, injection ports, beakers) or openings (e.g., opened ampuls, needle hubs) exposed and at risk of direct contact with air (e.g., ambient room or HEPA filtered), moisture (e.g., oral and mucosal secretions), or touch contamination. Risk of microbial particulate contamination of the critical site increases with the size of the openings and exposure time.

Direct Compounding Area (DCA)—A critical area within the ISO Class 5 (see *Table 1*) primary engineering control (PEC) where critical sites are exposed to unidirectional HEPA-filtered air, also known as first air.

Disinfectant—An agent that frees from infection, usually a chemical agent but sometimes a physical one, and that destroys disease-causing pathogens or other harmful microorganisms but may not kill bacterial and fungal spores. It refers to substances applied to inanimate objects.

First Air—The air exiting the HEPA filter in a unidirectional air stream that is essentially particle free.

Hazardous Drugs—Drugs are classified as hazardous if studies in animals or humans indicate that exposures to them have a potential for causing cancer, development or reproductive toxicity, or harm to organs. (See current NIOSH publication.)

Labeling [see *General Notices and Requirements* and 21 USC 321 (k) and (m)]—A term that designates all labels and other written, printed, or graphic matter on an immediate container of an article or preparation or on, or in, any package or wrapper in which it is enclosed, except any outer shipping container. The term "label" designates that part of the labeling on the immediate container.

Media-Fill Test (see *Microbiological Control and Monitoring of Aseptic Processing Environments* ⟨1116⟩)—A test used to qualify aseptic technique of compounding personnel or processes and to ensure that the processes used are able to produce sterile product without microbial contamination. During this test, a microbiological growth medium such as Soybean–Casein Digest Medium is substituted for the actual drug product to simulate admixture compounding.[3] The issues to consider in the development of a media-fill test are media-fill procedures, media selection, fill volume, incubation, time and temperature, inspection of filled units, documentation, interpretation of results, and possible corrective actions required.

Multiple-Dose Container (see *General Notices and Requirements* and *Containers for Injections* under *Injections* ⟨1⟩)—A multiple-unit container for articles or preparations intended for parenteral administration only and usually containing antimicrobial preservatives. The beyond-use date (BUD) for an opened or entered (e.g., needle-punctured) multiple-dose container with antimicrobial preservatives is 28 days (see *Antimicrobial Effectiveness Testing* ⟨51⟩), unless otherwise specified by the manufacturer.

Negative Pressure Room—A room that is at a lower pressure than the adjacent spaces and, therefore, the net flow of air is *into* the room.[1]

Pharmacy Bulk Package (see *Containers for Injections* under *Injections* ⟨1⟩)—A container of a sterile preparation for parenteral use that contains many single doses. The contents are intended for use in a pharmacy admixture program and are restricted to the preparation of admixtures for infusion or, through a sterile transfer device, for the filling of empty sterile syringes. The closure shall be penetrated only one time after constitution with a suitable sterile transfer device or dispensing set, which allows measured dispensing of the contents. The pharmacy bulk package is to be used only in a suitable work area such as a laminar flow hood (or an equivalent clean air compounding area).

Where a container is offered as a pharmacy bulk package, the label shall (a) state prominently "Pharmacy Bulk Package—Not for Direct Infusion," (b) contain or refer to information on proper techniques to help ensure safe use of the product, and (c) bear a statement limiting the time frame in which the container may be used once it has been entered, provided it is held under the labeled storage conditions.

Primary Engineering Control (PEC)—A device or room that provides an ISO Class 5 (see *Table 1*) environment for the exposure of critical sites when compounding CSPs. Such devices include, but may not be limited to, laminar airflow workbenches (LAFWs), biological safety cabinets (BSCs), compounding aseptic isolators (CAIs), and compounding aseptic containment isolators (CACIs).

Preparation—A preparation, or a CSP, that is a sterile drug or nutrient compounded in a licensed pharmacy or other healthcare-related facility pursuant to the order of a licensed prescriber; the article may or may not contain sterile products.

Product—A commercially manufactured sterile drug or nutrient that has been evaluated for safety and efficacy by the FDA. Products are accompanied by full prescribing information, which is commonly known as the FDA-approved manufacturer's labeling or product package insert.

[2] *CETA Applications Guide for the Use of Compounding Isolators in Compounding Sterile Preparations in Healthcare Facilities,* CAG-001-2005, Controlled Environment Testing Association (CETA), November 8, 2005.
[3] U.S. Food and Drug Administration, Guidance for Industry, *Sterile Drug Products Produced by Aseptic Processing—Current Good Manufacturing Practice,* September 2004.

Copyright (c) 2013 The United States Pharmacopeial Convention. All rights reserved.

Positive Pressure Room—A room that is at a higher pressure than the adjacent spaces and, therefore, the net airflow is *out of* the room.[1]

Single-Dose Container (see *General Notices and Requirements* and *Containers for Injections* under *Injections* ⟨1⟩)—A single-dose container is a single-unit container for articles (see *General Notices and Requirements*) or preparations intended for parenteral administration only. It is intended for a single use. A single-dose container is labeled as such. Examples of single-dose containers include prefilled syringes, cartridges, fusion-sealed containers, and closure-sealed containers when so labeled.

Segregated Compounding Area—A designated space, either a demarcated area or room, that is restricted to preparing low-risk level CSPs with 12-hour or less BUD. Such area shall contain a device that provides unidirectional airflow of ISO Class 5 (see *Table 1*) air quality for preparation of CSPs and shall be void of activities and materials that are extraneous to sterile compounding.

Sterilizing Grade Membranes—Membranes that are documented to retain 100% of a culture of 10^7 microorganisms of a strain of *Brevundimonas (Pseudomonas) diminuta* per square centimeter of membrane surface under a pressure of not less than 30 psi (2.0 bar). Such filter membranes are nominally at 0.22-µm or 0.2-µm nominal pore size, depending on the manufacturer's practice.

Sterilization by Filtration—Passage of a fluid or solution through a sterilizing grade membrane to produce a sterile effluent.

Terminal Sterilization—The application of a lethal process (e.g., steam under pressure or autoclaving) to sealed containers for the purpose of achieving a predetermined sterility assurance level of usually less than 10^{-6}, or a probability of less than one in one million of a nonsterile unit.[3]

Unidirectional Flow (see footnote 3)—An airflow moving in a single direction in a robust and uniform manner and at sufficient speed to reproducibly sweep particles away from the critical processing or testing area.

RESPONSIBILITY OF COMPOUNDING PERSONNEL

Compounding personnel are responsible for ensuring that CSPs are accurately identified, measured, diluted, and mixed and are correctly purified, sterilized, packaged, sealed, labeled, stored, dispensed, and distributed. These performance responsibilities include maintaining appropriate cleanliness conditions and providing labeling and supplementary instructions for the proper clinical administration of CSPs.

Compounding supervisors shall ensure, through either direct measurement or appropriate information sources, that specific CSPs maintain their labeled strength within monograph limits for *USP* articles, or within 10% if not specified, until their BUDs. All CSPs are prepared in a manner that maintains sterility and minimizes the introduction of particulate matter.

A written quality assurance procedure includes the following in-process checks that are applied, as appropriate, to specific CSPs: accuracy and precision of measuring and weighing; the requirement for sterility; methods of sterilization and purification; safe limits and ranges for strength of ingredients, bacterial endotoxins, and particulate matter; pH; labeling accuracy and completeness; BUD assignment; and packaging and storage requirements. The dispenser shall, when appropriate and practicable, obtain and evaluate results of testing for identity, strength, purity, and sterility before a CSP is dispensed. Qualified licensed healthcare professionals who supervise compounding and dispensing of CSPs shall ensure that the following objectives are achieved:

1. Compounding personnel are adequately skilled, educated, instructed, and trained to correctly perform and document the following activities in their sterile compounding duties:
   a. perform antiseptic hand cleansing and disinfection of nonsterile compounding surfaces;
   b. select and appropriately don protective garb;
   c. maintain or achieve sterility of CSPs in ISO Class 5 (see *Table 1*) PEC devices and protect personnel and compounding environments from contamination by radioactive, cytotoxic, and chemotoxic drugs (see *Hazardous Drugs as CSPs* and *Radiopharmaceuticals as CSPs*);
   d. identify, weigh, and measure ingredients; and
   e. manipulate sterile products aseptically, sterilize high-risk level CSPs, and label and quality inspect CSPs.
2. Ingredients have their correct identity, quality, and purity.
3. Opened or partially used packages of ingredients for subsequent use in CSPs are properly stored under restricted access conditions in the compounding facility. Such packages cannot be used when visual inspection detects unauthorized breaks in the container, closure, and seal; when the contents do not possess the expected appearance, aroma, and texture; when the contents do not pass identification tests specified by the compounding facility; and when either the BUD or expiration date has been exceeded.
4. Water-containing CSPs that are nonsterile during any phase of the compounding procedure are sterilized within 6 hours after completing the preparation in order to minimize the generation of bacterial endotoxins.
5. Sterilization methods achieve sterility of CSPs while maintaining the labeled strength of active ingredients and the physical integrity of packaging.
6. Measuring, mixing, sterilizing, and purifying devices are clean, appropriately accurate, and effective for their intended use.
7. Potential harm from added substances and differences in rate and extent of bioavailability of active ingredients for other than oral route of administration are carefully evaluated before such CSPs are dispensed and administered.
8. Packaging selected for CSPs is appropriate to preserve the sterility and strength until the BUD.
9. While being used, the compounding environment maintains the sterility or the presterilization purity, whichever is appropriate, of the CSP.
10. Labels on CSPs list the names and amounts or concentrations of active ingredients, and the labels or labeling of injections (see *Preservation, Packaging, Storage, and Labeling* in the *General Notices and Requirements*) list the names and amounts or concentrations of all ingredients (see *Injections* ⟨1⟩). Before being dispensed or administered, the clarity of solutions is visually

Accessed from 167.78.4.19 by James Cumbie (ocean22) on Mon Sep 09 15:04:23 EDT 2013

confirmed; also, the identity and amounts of ingredients, procedures to prepare and sterilize CSPs, and specific release criteria are reviewed to ensure their accuracy and completeness.

11. BUDs are assigned on the basis of direct testing or extrapolation from reliable literature sources and other documentation (see *Stability Criteria and Beyond-Use Dating* under *Pharmaceutical Compounding—Nonsterile Preparations* ⟨795⟩).
12. Procedures for measuring, mixing, dilution, purification, sterilization, packaging, and labeling conform to the correct sequence and quality established for the specified CSP.
13. Deficiencies in compounding, labeling, packaging, and quality testing and inspection can be rapidly identified and corrected.
14. When time and personnel availability so permit, compounding manipulations and procedures are separated from postcompounding quality inspection and review before CSPs are dispensed.

This chapter emphasizes the need to maintain high standards for the quality and control of processes, components, and environments and for the skill and knowledge of personnel who prepare CSPs. The rigor of in-process quality-control checks and of postcompounding quality inspection and testing increases with the potential hazard of the route of administration. For example, nonsterility, excessive bacterial endotoxin contamination, large errors in strength of correct ingredients, and incorrect ingredients in CSPs are potentially more dangerous to patients when the CSPs are administered into the vascular and central nervous systems than when administered by most other routes.

CSP MICROBIAL CONTAMINATION RISK LEVELS

The three contamination categories for CSPs described in this section are assigned primarily according to the potential for microbial contamination during the compounding of low-risk level CSPs and medium-risk level CSPs or the potential for not sterilizing high-risk level CSPs, any of which would subject patients to risk of harm, including death. High-risk level CSPs must be sterilized before being administered to patients. The appropriate risk level—low, medium, or high—is assigned according to the corresponding probability of contaminating a CSP with (1) microbial contamination (e.g., microbial organisms, spores, endotoxins) and (2) chemical and physical contamination (e.g., foreign chemicals, physical matter). Potential sources of contamination include, but are not limited to, solid and liquid matter from compounding personnel and objects; nonsterile components employed and incorporated before terminal sterilization; inappropriate conditions within the restricted compounding environment; prolonged presterilization procedures with aqueous preparations; and nonsterile dosage forms used to compound CSPs.

The characteristics described below for low-, medium-, and high-risk level CSPs are intended as a guide to the breadth and depth of care necessary in compounding, but they are neither exhaustive nor prescriptive. The licensed healthcare professionals who supervise compounding are responsible for determining the procedural and environmental quality practices and attributes that are necessary for the risk level they assign to specific CSPs.

These risk levels apply to the quality of CSPs immediately after the final aseptic mixing or filling or immediately after the final sterilization, unless precluded by the specific characteristics of the preparation. Upon subsequent storage and shipping of freshly finished CSPs, an increase in the risks of chemical degradation of ingredients, contamination from physical damage to packaging, and permeability of plastic and elastomeric packaging is expected. In such cases, compounding personnel are responsible for considering the potential additional risks to the integrity of CSPs when assigning BUDs. The pre-administration storage duration and temperature limits specified in the following subsections apply in the absence of direct sterility testing results that justify different limits for specific CSPs.

Low-Risk Level CSPs

CSPs compounded under all the following conditions are at a low risk of contamination.

Low-Risk Conditions—

1. The CSPs are compounded with aseptic manipulations entirely within ISO Class 5 (see *Table 1*) or better air quality using only sterile ingredients, products, components, and devices.
2. The compounding involves only transfer, measuring, and mixing manipulations using not more than three commercially manufactured packages of sterile products and not more than two entries into any one sterile container or package (e.g., bag, vial) of sterile product or administration container/device to prepare the CSP.
3. Manipulations are limited to aseptically opening ampuls, penetrating disinfected stoppers on vials with sterile needles and syringes, and transferring sterile liquids in sterile syringes to sterile administration devices, package containers of other sterile products, and containers for storage and dispensing.
4. For a low-risk level preparation, in the absence of passing a sterility test (see *Sterility Tests* ⟨71⟩), the storage periods cannot exceed the following time periods: before administration, the CSPs are properly stored and are exposed for not more than 48 hours at controlled room temperature (see *General Notices and Requirements*), for not more than 14 days at a cold temperature (see *General Notices and Requirements*), and for 45 days in solid frozen state between −25° and −10°.

Examples of Low-Risk Compounding—

1. Single-volume transfers of sterile dosage forms from ampuls, bottles, bags, and vials using sterile syringes with sterile needles, other administration devices, and other sterile containers. The solution content of ampuls should be passed through a sterile filter to remove any particles.
2. Simple aseptic measuring and transferring with not more than three packages of manufactured sterile products, including an infusion or diluent solution to compound drug admixtures and nutritional solutions.

Low-Risk Level CSPs with 12-Hour or Less BUD—If the PEC is a CAI or CACI that does not meet the requirements described in *Placement of Primary Engineering Controls* or is a laminar airflow workbench (LAFW) or a biological safety cabinet (BSC) that cannot be located within an ISO Class 7 (see *Table 1*) buffer area, then only low-risk level nonhazardous and radiopharmaceutical CSPs

Copyright (c) 2013 The United States Pharmacopeial Convention. All rights reserved.

pursuant to a physician's order for a specific patient may be prepared, and administration of such CSPs shall commence within 12 hours of preparation or as recommended in the manufacturers' package insert, whichever is less. Low-risk level CSPs with a 12-hour or less BUD shall meet all of the following four criteria:

1. PECs (LAFWs, BSCs, CAIs, CACIs,) shall be certified and maintain ISO Class 5 (see *Table 1*) as described in *Facility Design and Environmental Controls* for exposure of critical sites and shall be in a segregated compounding area restricted to sterile compounding activities that minimize the risk of CSP contamination.
2. The segregated compounding area shall not be in a location that has unsealed windows or doors that connect to the outdoors or high traffic flow, or that is adjacent to construction sites, warehouses, or food preparation. Note that this list is not intended to be all inclusive.
3. Personnel shall follow the procedures described in *Personnel Cleansing and Garbing* and *Additional Personnel Requirements* prior to compounding. Sinks should not be located adjacent to the ISO Class 5 (see *Table 1*) PEC. Sinks should be separated from the immediate area of the ISO Class 5 (see *Table 1*) PEC device.
4. The specifications in *Cleaning and Disinfecting the Sterile Compounding Areas*, *Personnel Training and Competency Evaluation of Garbing, Aseptic Work Practices and Cleaning/Disinfection Procedures*, and *Viable and Nonviable Environmental Sampling (ES) Testing* shall be followed as described in the chapter.

Compounding personnel must recognize that the absence of an ISO Class 7 (see *Table 1*) buffer area environment in a general uncontrolled environment increases the potential of microbial contamination, and administration durations of microbially contaminated CSPs exceeding a few hours increase the potential for clinically significant microbial colonization, and thus for patient harm, especially in critically ill or immunocompromised patients.

Quality Assurance—Quality assurance practices include, but are not limited to the following:

1. Routine disinfection and air quality testing of the direct compounding environment to minimize microbial surface contamination and maintain ISO Class 5 (see *Table 1*) air quality.
2. Visual confirmation that compounding personnel are properly donning and wearing appropriate items and types of protective garments, including eye protection and face masks.
3. Review of all orders and packages of ingredients to ensure that the correct identity and amounts of ingredients were compounded.
4. Visual inspection of CSPs to ensure the absence of particulate matter in solutions, the absence of leakage from vials and bags, and the accuracy and thoroughness of labeling.

Media-Fill Test Procedure—This test or an equivalent test is performed at least annually by each person authorized to compound in a low-risk level environment under conditions that closely simulate the most challenging or stressful conditions encountered during compounding of low-risk level CSPs. Once begun, this test is completed without interruption. *Example of test procedure:* within an ISO Class 5 (see *Table 1*) air quality environment, three sets of four 5-mL aliquots of sterile Soybean–Casein Digest Medium (also known as trypticase soy broth or trypticase soy agar [TSA]) are transferred with the same sterile 10-mL syringe and vented needle combination into separate sealed, empty, sterile 30-mL clear vials (i.e., four 5-mL aliquots into each of three 30-mL vials). Sterile adhesive seals are aseptically affixed to the rubber closures on the three filled vials, then the vials are incubated at 20° to 25° or at 30° to 35° for a minimum of 14 days. If two temperatures are used for incubation of media-filled samples, then these filled containers should be incubated for at least 7 days at each temperature (see *Microbiological Control and Monitoring of Aseptic Processing Environments* ⟨1116⟩). Inspect for microbial growth over 14 days as described in *Personnel Training and Competency Evaluation of Garbing, Aseptic Work Practices and Cleaning/Disinfection Procedures*.

Medium-Risk Level CSPs

When CSPs are compounded aseptically under *Low-Risk Conditions* and one or more of the following conditions exists, such CSPs are at a medium risk of contamination.

Medium-Risk Conditions—

1. Multiple individual or small doses of sterile products are combined or pooled to prepare a CSP that will be administered either to multiple patients or to one patient on multiple occasions.
2. The compounding process includes complex aseptic manipulations other than the single-volume transfer.
3. The compounding process requires unusually long duration, such as that required to complete dissolution or homogeneous mixing.
4. For a medium-risk preparation, in the absence of passing a sterility test (see *Sterility Tests* ⟨71⟩), the storage periods cannot exceed the following time periods: before administration, the CSPs are properly stored and are exposed for not more than 30 hours at controlled room temperature (see *General Notices and Requirements*), for not more than 9 days at a cold temperature (see *General Notices and Requirements*), and for 45 days in solid frozen state between –25° and –10°.

Examples of Medium-Risk Compounding—

1. Compounding of total parenteral nutrition fluids using manual or automated devices during which there are multiple injections, detachments, and attachments of nutrient source products to the device or machine to deliver all nutritional components to a final sterile container.
2. Filling of reservoirs of injection and infusion devices with more than three sterile drug products and evacuation of air from those reservoirs before the filled device is dispensed.
3. Transfer of volumes from multiple ampuls or vials into one or more final sterile containers.

Quality Assurance—Quality assurance procedures for medium-risk level CSPs include all those for low-risk level CSPs, as well as a more challenging media-fill test passed annually or more frequently.

Accessed from 167.78.4.19 by James Cumbie (ocean22) on Mon Sep 09 15:04:23 EDT 2013

Media-Fill Test Procedure—This test or an equivalent test is performed at least annually under conditions that closely simulate the most challenging or stressful conditions encountered during compounding. Once begun, this test is completed without interruption. *Example of test procedure:* within an ISO Class 5 (see *Table 1*) air quality environment, six 100-mL aliquots of sterile Soybean–Casein Digest Medium are aseptically transferred by gravity through separate tubing sets into separate evacuated sterile containers. The six containers are then arranged as three pairs, and a sterile 10-mL syringe and 18-gauge needle combination is used to exchange two 5-mL aliquots of medium from one container to the other container in the pair. For example, after a 5-mL aliquot from the first container is added to the second container in the pair, the second container is agitated for 10 seconds, then a 5-mL aliquot is removed and returned to the first container in the pair. The first container is then agitated for 10 seconds, and the next 5-mL aliquot is transferred from it back to the second container in the pair. Following the two 5-mL aliquot exchanges in each pair of containers, a 5-mL aliquot of medium from each container is aseptically injected into a sealed, empty, sterile 10-mL clear vial, using a sterile 10-mL syringe and vented needle. Sterile adhesive seals are aseptically affixed to the rubber closures on the three filled vials, then the vials are incubated at 20° to 25° or at 30° to 35° for a minimum of 14 days. If two temperatures are used for incubation of media-filled samples, then these filled containers should be incubated for at least 7 days at each temperature (see *Microbiological Control and Monitoring of Aseptic Processing Environments* ⟨1116⟩). Inspect for microbial growth over 14 days as described in *Personnel Training and Competency Evaluation of Garbing, Aseptic Work Practices and Cleaning/Disinfection Procedures*.

High-Risk Level CSPs

CSPs compounded under any of the following conditions are either contaminated or at a high risk to become contaminated.

High-Risk Conditions—

1. Nonsterile ingredients, including manufactured products not intended for sterile routes of administration (e.g., oral), are incorporated or a nonsterile device is employed before terminal sterilization.
2. Any of the following are exposed to air quality worse than ISO Class 5 (see *Table 1*) for more than 1 hour (see *Immediate-Use CSPs*):
   - sterile contents of commercially manufactured products,
   - CSPs that lack effective antimicrobial preservatives, and
   - sterile surfaces of devices and containers for the preparation, transfer, sterilization, and packaging of CSPs.
3. Compounding personnel are improperly garbed and gloved (see *Personnel Cleansing and Use of Barrier Protective Equipment*).
4. Nonsterile water-containing preparations are stored for more than 6 hours before being sterilized.
5. It is assumed, and not verified by examination of labeling and documentation from suppliers or by direct determination, that the chemical purity and content strength of ingredients meet their original or compendial specifications in unopened or in opened packages of bulk ingredients (see *Ingredient Selection* under *Pharmaceutical Compounding—Nonsterile Preparations* ⟨795⟩).

For a sterilized high-risk level preparation, in the absence of passing a sterility test, the storage periods cannot exceed the following time periods: before administration, the CSPs are properly stored and are exposed for not more than 24 hours at controlled room temperature (see *General Notices and Requirements*), for not more than 3 days at a cold temperature (see *General Notices and Requirements*), and for 45 days in solid frozen state between −25° and −10°. [NOTE—Sterility tests for autoclaved CSPs are not required unless they are prepared in batches of more than 25 units.]

All nonsterile measuring, mixing, and purifying devices are rinsed thoroughly with sterile, pyrogen-free water, and then thoroughly drained or dried immediately before use for high-risk compounding. All high-risk level CSP solutions subjected to terminal sterilization are prefiltered by passing through a filter with a nominal pore size not larger than 1.2 µm preceding or during filling into their final containers to remove particulate matter. Sterilization of high-risk level CSPs by filtration shall be performed with a sterile 0.2-µm or 0.22-µm nominal pore size filter entirely within an ISO Class 5 (see *Table 1*) or superior air quality environment.

Examples of High-Risk Conditions—

1. Dissolving nonsterile bulk drug and nutrient powders to make solutions that will be terminally sterilized.
2. Exposing the sterile ingredients and components used to prepare and package CSPs to room air quality worse than ISO Class 5 (see *Table 1*) for more than 1 hour (see *Immediate-Use CSPs*).
3. Measuring and mixing sterile ingredients in nonsterile devices before sterilization is performed.
4. Assuming, without appropriate evidence or direct determination, that packages of bulk ingredients contain at least 95% by weight of their active chemical moiety and have not been contaminated or adulterated between uses.

Quality Assurance—Quality assurance procedures for high-risk level CSPs include all those for low-risk level CSPs. In addition, a media-fill test that represents high-risk level compounding is performed semiannually by each person authorized to compound high-risk level CSPs.

Media-Fill Test Procedure for CSPs Sterilized by Filtration—This test or an equivalent test is performed under conditions that closely simulate the most challenging or stressful conditions encountered when compounding high-risk level CSPs. Once begun, this test is completed without interruption. *Example of test procedure* (in the following sequence):

1. Dissolve 3 g of nonsterile commercially available Soybean–Casein Digest Medium in 100 mL of nonbacteriostatic water to make a 3% nonsterile solution.
2. Draw 25 mL of the medium into each of three 30-mL sterile syringes. Transfer 5 mL from each syringe into separate sterile 10-mL vials. These vials are the positive controls to generate exponential microbial growth, which is indicated by visible turbidity upon incubation.
3. Under aseptic conditions and using aseptic techniques, affix a sterile 0.2-µm or 0.22-µm nominal pore size filter unit and a 20-gauge needle to each syringe. Inject the next 10 mL from each syringe into three separate 10-mL sterile vials. Repeat the process for three more vials. Label all vials, affix sterile adhesive seals to the closure of the nine vials, and incubate them at 20° to 25° or at 30° to 35° for a minimum of 14 days. If two temperatures are used for incubation of media-filled samples, then

Copyright (c) 2013 The United States Pharmacopeial Convention. All rights reserved.

these filled containers should be incubated for at least 7 days at each temperature (see *Microbiological Control and Monitoring of Aseptic Processing Environments* ⟨1116⟩). Inspect for microbial growth over 14 days as described in *Personnel Training and Competency Evaluation of Garbing, Aseptic Work Practices and Cleaning/Disinfection Procedures*.

PERSONNEL TRAINING AND EVALUATION IN ASEPTIC MANIPULATION SKILLS

Personnel who prepare CSPs shall be trained conscientiously and skillfully by expert personnel and through audio–video instructional sources and professional publications in the theoretical principles and practical skills of aseptic manipulations and in achieving and maintaining ISO Class 5 (see *Table 1*) environmental conditions before they begin to prepare CSPs. Compounding personnel shall perform didactic review and pass written and media-fill testing of aseptic manipulative skills initially, at least annually thereafter for low- and medium-risk level compounding, and semiannually for high-risk level compounding. Compounding personnel who fail written tests or whose media-fill test vials result in gross microbial colonization shall be immediately re-instructed and re-evaluated by expert compounding personnel to ensure correction of all aseptic practice deficiencies.

Media-Fill Challenge Testing—The skill of personnel to aseptically prepare CSPs may be evaluated using sterile fluid bacterial culture media-fill verification[3] (i.e., sterile bacterial culture medium transfer via a sterile syringe and needle). Media-fill testing is used to assess the quality of the aseptic skill of compounding personnel. Media-fill tests represent the most challenging or stressful conditions actually encountered by the personnel being evaluated when they prepare particular risk level CSPs and when sterilizing high-risk level CSPs. Media-fill challenge tests that simulate high-risk level compounding are also used to verify the capability of the compounding environment and process to produce a sterile preparation.

Commercially available sterile fluid culture media, such as Soybean–Casein Digest Medium (see *Sterility Tests* ⟨71⟩), shall be able to promote exponential colonization of bacteria that are most likely to be transmitted to CSPs from the compounding personnel and environment. Media-filled vials are generally incubated at 20° to 25° or at 30° to 35° for a minimum of 14 days. If two temperatures are used for incubation of media-filled samples, then these filled containers should be incubated for at least 7 days at each temperature (see *Microbiological Control and Monitoring of Aseptic Processing Environments* ⟨1116⟩). Failure is indicated by visible turbidity in the medium on or before 14 days.

IMMEDIATE-USE CSPs

The immediate-use provision is intended only for those situations where there is a need for emergency or immediate patient administration of a CSP. Such situations may include cardiopulmonary resuscitation, emergency room treatment, preparation of diagnostic agents, or critical therapy where the preparation of the CSP under conditions described for *Low-Risk Level CSPs* subjects the patient to additional risk due to delays in therapy. Immediate-use CSPs are not intended for storage for anticipated needs or batch compounding. Preparations that are medium-risk level and high-risk level CSPs shall not be prepared as immediate-use CSPs.

Immediate-use CSPs are exempt from the requirements described for *Low-Risk Level CSPs* only when all of the following criteria are met:

1. The compounding process involves simple transfer of not more than three commercially manufactured packages of sterile nonhazardous products or diagnostic radiopharmaceutical products from the manufacturers' original containers and not more than two entries into any one container or package (e.g., bag, vial) of sterile infusion solution or administration container/device. For example, anti-neoplastics shall not be prepared as immediate-use CSPs because they are hazardous drugs.
2. Unless required for the preparation, the compounding procedure is a continuous process not to exceed 1 hour.
3. During preparation, aseptic technique is followed and, if not immediately administered, the finished CSP is under continuous supervision to minimize the potential for contact with nonsterile surfaces, introduction of particulate matter or biological fluids, mix-ups with other CSPs, and direct contact of outside surfaces.
4. Administration begins not later than 1 hour following the start of the preparation of the CSP.
5. Unless immediately and completely administered by the person who prepared it or immediate and complete administration is witnessed by the preparer, the CSP shall bear a label listing patient identification information, the names and amounts of all ingredients, the name or initials of the person who prepared the CSP, and the exact 1-hour BUD and time.
6. If administration has not begun within 1 hour following the start of preparing the CSP, the CSP shall be promptly, properly, and safely discarded.

Compounding in worse than ISO Class 5 (see *Table 1*) conditions increases the likelihood of microbial contamination, and administration durations of microbially contaminated CSPs exceeding a few hours increase the potential for clinically significant microbial colonization and thus for patient harm, especially in critically ill or immunocompromised patients.

SINGLE-DOSE AND MULTIPLE-DOSE CONTAINERS

Opened or needle-punctured single-dose containers, such as bags, bottles, syringes, and vials of sterile products and CSPs shall be used within 1 hour if opened in worse than ISO Class 5 (see *Table 1*) air quality (see *Immediate-Use CSPs*), and any remaining contents must be discarded. Single-dose vials exposed to ISO Class 5 (see *Table 1*) or cleaner air may be used up to 6 hours after initial needle puncture. Opened single-dose ampuls shall not be stored for any time period. Multiple-dose containers (e.g., vials) are formulated for removal of portions on multiple occasions because they usually contain antimicrobial preservatives. The BUD after initially entering or opening (e.g., needle-punctured) multiple-dose containers is 28 days (see *Antimicrobial Effectiveness Testing* ⟨51⟩) unless otherwise specified by the manufacturer.

Accessed from 167.78.4.19 by James Cumbie (ocean22) on Mon Sep 09 15:04:23 EDT 2013

HAZARDOUS DRUGS AS CSPs

Although the potential therapeutic benefits of compounded sterile hazardous drug preparations generally outweigh the risks of their adverse effects in ill patients, exposed healthcare workers risk similar adverse effects with no therapeutic benefit. Occupational exposure to hazardous drugs can result in (1) acute effects, such as skin rashes; (2) chronic effects, including adverse reproductive events; and (3) possibly cancer (see Appendix A of NIOSH Publication no. 2004-165).

Hazardous drugs shall be prepared for administration only under conditions that protect the healthcare workers and other personnel in the preparation and storage areas. Hazardous drugs shall be stored separately from other inventory in a manner to prevent contamination and personnel exposure. Many hazardous drugs have sufficient vapor pressures that allow volatilization at room temperature; thus storage is preferably within a containment area such as a negative pressure room. The storage area should have sufficient general exhaust ventilation, at least 12 air changes per hour (ACPH)[4] to dilute and remove any airborne contaminants.

Hazardous drugs shall be handled with caution at all times using appropriate chemotherapy gloves during receiving, distribution, stocking, inventorying, preparation for administration, and disposal. Hazardous drugs shall be prepared in an ISO Class 5 (see *Table 1*) environment with protective engineering controls in place and following aseptic practices specified for the appropriate contamination risk levels defined in this chapter. Access shall be limited to areas where drugs are stored and prepared to protect persons not involved in drug preparation.

All hazardous drugs shall be prepared in a BSC[5] or a CACI that meets or exceeds the standards for CACI in this chapter. The ISO Class 5 (see *Table 1*) BSC or CACI shall be placed in an ISO Class 7 (see *Table 1*) area that is physically separated (i.e., a different area from other preparation areas) and optimally has not less than 0.01-inch water column negative pressure to adjacent positive pressure ISO Class 7 (see *Table 1*) or better ante-areas, thus providing inward airflow to contain any airborne drug. A pressure indicator shall be installed that can be readily monitored for correct room pressurization. The BSC and CACI optimally should be 100% vented to the outside air through HEPA filtration.

If a CACI that meets the requirements of this chapter is used outside of a buffer area, the compounding area shall maintain a minimum negative pressure of 0.01-inch water column and have a minimum of 12 ACPHs.

When closed-system vial-transfer devices (CSTDs) (i.e., vial-transfer systems that allow no venting or exposure of hazardous substance to the environment) are used, they shall be used within the ISO Class 5 (see *Table 1*) environment of a BSC or CACI. The use of a CSTD is preferred because of their inherent closed system process. In facilities that prepare a low volume of hazardous drugs, the use of two tiers of containment (e.g., CSTD within a BSC or CACI that is located in a non-negative pressure room) is acceptable.

Appropriate personnel protective equipment (PPE) shall be worn when compounding in a BSC or CACI and when using CSTD devices. PPE should include gowns, face masks, eye protection, hair covers, shoe covers or dedicated shoes, double gloving with sterile chemo-type gloves, and compliance with manufacturers' recommendations when using a CACI.

All personnel who compound hazardous drugs shall be fully trained in the storage, handling, and disposal of these drugs. This training shall occur prior to preparing or handling hazardous CSPs, and its effectiveness shall be verified by testing specific hazardous drugs preparation techniques. Such verification shall be documented for each person at least annually. This training shall include didactic overview of hazardous drugs, including mutagenic, teratogenic, and carcinogenic properties, and it shall include ongoing training for each new hazardous drug that enters the marketplace. Compounding personnel of reproductive capability shall confirm in writing that they understand the risks of handling hazardous drugs. The training shall include at least the following: (1) safe aseptic manipulation practices; (2) negative pressure techniques when utilizing a BSC or CACI; (3) correct use of CSTD devices; (4) containment, cleanup, and disposal procedures for breakages and spills; and (5) treatment of personnel contact and inhalation exposure.

NOTE—*Because standards of assay and unacceptable quantities of contamination of each drug have not been established in the literature, the following paragraph is a recommendation only. Future standards will be adopted as these assay methods are developed and proven.*

In order to ensure containment, especially in operations preparing large volumes of hazardous drugs, environmental sampling to detect uncontained hazardous drugs should be performed routinely (e.g., initially as a benchmark and at least every 6 months or more often as needed to verify containment). This sampling should include surface wipe sampling of the working area of BSCs and CACIs; counter tops where finished preparations are placed; areas adjacent to BSCs and CACIs, including the floor directly under the working area; and patient administration areas. Common marker hazardous drugs that can be assayed include cyclophosphamide, ifosfamide, methotrexate, and fluorouracil. If any measurable contamination (cyclophosphamide levels greater than 1.00 ng per cm^2 have been found to cause human uptake) is found by any of these quality assurance procedures, practitioners shall make the decision to identify, document, and contain the cause of contamination. Such action may include retraining, thorough cleaning (utilizing high-pH soap and water), and improving engineering controls. Examples of improving engineering controls are (1) venting BSCs or CACIs 100% to the outside, (2) implementing a CSTD, or (3) re-assessing types of BSCs or CACIs.

Disposal of all hazardous drug wastes shall comply with all applicable federal and state regulations. All personnel who perform routine custodial waste removal and cleaning activities in storage and preparation areas for hazardous drugs shall be trained in appropriate procedures to protect themselves and prevent contamination.

RADIOPHARMACEUTICALS AS CSPs

In the case of production of radiopharmaceuticals for positron emission tomography (PET), general test chapter *Positron Emission Tomography Drugs for Compounding, Investigational, and Research Uses* ⟨823⟩ supersedes this chapter. Upon release of a PET radio-

[4] Guidelines for Environmental Infection Control in Health-Care Facilities, Recommendations of CDC and the Healthcare Infection Control Practices Advisory Committee (HICPAC), MMWR, vol. 52, no. RR-10, June 6, 2003, figure 3, pg. 12.
[5] NSF/ANSI 49.

Copyright (c) 2013 The United States Pharmacopeial Convention. All rights reserved.

pharmaceutical as a finished drug product from a production facility, the further handling, manipulation, or use of the product will be considered compounding, and the content of this section and chapter is applicable.

For the purposes of this chapter, radiopharmaceuticals compounded from sterile components in closed sterile containers and with a volume of 100 mL or less for a single-dose injection or not more than 30 mL taken from a multiple-dose container (see *Injections* ⟨1⟩) shall be designated as, and conform to, the standards for *Low-Risk Level CSPs.*

These radiopharmaceuticals shall be compounded using appropriately shielded vials and syringes in a properly functioning and certified ISO Class 5 (see *Table 1*) PEC located in an ISO Class 8 (see *Table 1*) or cleaner air environment to permit compliance with special handling, shielding, and negative air flow requirements.

Radiopharmaceutical vials designed for multi-use, compounded with technetium-99m, exposed to ISO Class 5 (see *Table 1*) environment, and punctured by needles with no direct contact contamination may be used up to the time indicated by manufacturers' recommendations. Storage and transport of properly shielded vials of radiopharmaceutical CSPs may occur in a limited access ambient environment without a specific ISO class designation.

Technetium-99m/molybdenum-99 generator systems shall be stored and eluted (operated) under conditions recommended by manufacturers and applicable state and federal regulations. Such generator systems shall be eluted in an ISO Class 8 (see *Table 1*) or cleaner air environment to permit special handling, shielding, and air flow requirements. To limit acute and chronic radiation exposure of inspecting personnel to a level that is as low as reasonably achievable (ALARA), direct visual inspection of radiopharmaceutical CSPs containing high concentrations of doses of radioactivity shall be conducted in accordance with ALARA.

Radiopharmaceuticals prepared as *Low-Risk Level CSPs with 12-Hour or Less BUD* shall be prepared in a segregated compounding area. A line of demarcation defining the segregated compounding area shall be established. Materials and garb exposed in a patient care and treatment area shall not cross a line of demarcation into the segregated compounding area.

ALLERGEN EXTRACTS AS CSPs

Allergen extracts as CSPs are single-dose and multiple-dose *intradermal or subcutaneous injections* that are prepared by specially trained physicians and personnel under their direct supervision. Allergen extracts as CSPs are not subject to the personnel, environmental, and storage requirements for all *CSP Microbial Contamination Risk Levels* in this chapter only when all of the following criteria are met:

1. The compounding process involves simple transfer via sterile needles and syringes of commercial sterile allergen products and appropriate sterile added substances (e.g., glycerin, phenol in sodium chloride injection).
2. All allergen extracts as CSPs shall contain appropriate substances in effective concentrations to prevent the growth of microorganisms. Nonpreserved allergen extracts shall comply with the appropriate CSP risk level requirements in the chapter.
3. Before beginning compounding activities, personnel perform a thorough hand-cleansing procedure by removing debris from under fingernails using a nail cleaner under running warm water followed by vigorous hand and arm washing to the elbows for at least 30 seconds with either nonantimicrobial or antimicrobial soap and water.
4. Compounding personnel don hair covers, facial hair covers, gowns, and face masks.
5. Compounding personnel perform antiseptic hand cleansing with an alcohol-based surgical hand scrub with persistent activity.
6. Compounding personnel don powder-free sterile gloves that are compatible with sterile 70% isopropyl alcohol (IPA) before beginning compounding manipulations.
7. Compounding personnel disinfect their gloves intermittently with sterile 70% IPA when preparing multiple allergen extracts as CSPs.
8. Ampul necks and vial stoppers on packages of manufactured sterile ingredients are disinfected by careful wiping with sterile 70% IPA swabs to ensure that the critical sites are wet for at least 10 seconds and allowed to dry before they are used to compound allergen extracts as CSPs.
9. The aseptic compounding manipulations minimize direct contact contamination (e.g., from glove fingertips, blood, nasal and oral secretions, shed skin and cosmetics, other nonsterile materials) of critical sites (e.g., needles, opened ampuls, vial stoppers).
10. The label of each multiple-dose vial (MDV) of allergen extracts as CSPs lists the name of one specific patient and a BUD and storage temperature range that is assigned based on manufacturers' recommendations or peer-reviewed publications.
11. Single-dose allergen extracts as CSPs shall not be stored for subsequent additional use.

Personnel who compound allergen extracts as CSPs must be aware of greater potential risk of microbial and foreign material contamination when allergen extracts as CSPs are compounded in compliance with the foregoing criteria instead of the more rigorous standards in this chapter for *CSP Microbial Contamination Risk Levels.* Although contaminated allergen extracts as CSPs can pose health risks to patients when they are injected *intradermally or subcutaneously,* these risks are substantially greater if the extract is inadvertently injected *intravenously.*

VERIFICATION OF COMPOUNDING ACCURACY AND STERILITY

The compounding procedures and sterilization methods for CSPs correspond to correctly designed and verified written documentation in the compounding facility. Verification requires planned testing, monitoring, and documentation to demonstrate adherence to environmental quality requirements, personnel practices, and procedures critical to achieving and maintaining sterility, accuracy, and purity of finished CSPs. For example, sterility testing (see *Test for Sterility of the Product To Be Examined* under *Sterility Tests* ⟨71⟩) may be applied to specimens of low- and medium-risk level CSPs, and standard self-contained biological indicators (BI) shall be added to nondispensable specimens of high-risk level CSPs before terminal sterilization for subsequent evaluation to determine whether the sterilization cycle was adequate (see *Biological Indicators for Sterilization* ⟨1035⟩). Packaged and labeled CSPs shall be visually inspected for physical integrity and expected appearance, including final fill amount. The accuracy of identities, concentra-

Accessed from 167.78.4.19 by James Cumbie (ocean22) on Mon Sep 09 15:04:23 EDT 2013

tions, amounts, and purities of ingredients in CSPs shall be confirmed by reviewing labels on packages, observing and documenting correct measurements with approved and correctly standardized devices, and reviewing information in labeling and certificates of analysis provided by suppliers. When the correct identity, purity, strength, and sterility of ingredients and components of CSPs cannot be confirmed (in cases of, for example, unlabeled syringes, opened ampuls, punctured stoppers of vials and bags, containers of ingredients with incomplete labeling), such ingredients and components shall be discarded immediately.

Some individual ingredients, such as bulk drug substances, are not labeled with expiration dates when they are stable indefinitely in their commercial packages under their labeled storage conditions. However, despite retaining full chemical stability, such ingredients may gain or lose moisture during storage and use. Changes in moisture content may require testing (see *Loss on Drying* ⟨731⟩) to determine the correct amount to weigh for accurate content of active chemical moieties in CSPs (see *Pharmaceutical Calculations in Prescription Compounding* ⟨1160⟩).

Although not required, a quantitative stability-indicating chemical assay is recommended to ensure compounding accuracy of CSPs, especially those that contain drug ingredients with a narrow therapeutic plasma concentration range.

Sterilization Methods

The licensed healthcare professionals who supervise compounding shall be responsible for determining that the selected sterilization method (see *Methods of Sterilization* under *Sterilization and Sterility Assurance of Compendial Articles* ⟨1211⟩) both sterilizes and maintains the strength, purity, quality, and packaging integrity of CSPs. The selected sterilization process is obtained from experience and appropriate information sources (e.g., see *Sterilization and Sterility Assurance of Compendial Articles* ⟨1211⟩)—and, preferably, verified wherever possible—to achieve sterility in the particular CSPs. General guidelines for matching CSPs and components to appropriate sterilization methods include the following:

1. CSPs have been ascertained to remain physically and chemically stable when subjected to the selected sterilization method.
2. Glass and metal devices may be covered tightly with aluminum foil, then exposed to dry heat in an oven at a mean temperature of 250° for 30 minutes to achieve sterility and depyrogenation (see *Dry-Heat Sterilization* under *Sterilization and Sterility Assurance of Compendial Articles* ⟨1211⟩ and *Bacterial Endotoxins Test* ⟨85⟩). Such items are either used immediately or stored until use in an environment suitable for compounding *Low-Risk Level CSPs* and *Medium-Risk Level CSPs*.
3. Personnel ascertain from appropriate information sources that the sterile microporous membrane filter used to sterilize CSP solutions, during either compounding or administration, is chemically and physically compatible with the CSP.

STERILIZATION OF HIGH-RISK LEVEL CSPS BY FILTRATION

Commercially available sterile filters shall be approved for human-use applications in sterilizing pharmaceutical fluids. Sterile filters used to sterilize CSPs shall be pyrogen free and have a nominal pore size of 0.2 or 0.22 µm. They shall be certified by the manufacturer to retain at least 10^7 microorganisms of a strain of *Brevundimonas (Pseudomonas) diminuta* on each square centimeter of upstream filter surface area under conditions similar to those in which the CSPs will be sterilized (see *High-Risk Conditions* in *High-Risk Level CSPs*).

The compounding supervisor shall ensure, directly or from appropriate documentation, that the filters are chemically and physically stable at the pressure and temperature conditions to be used, that they have enough capacity to filter the required volumes, and that they will achieve sterility and maintain prefiltration pharmaceutical quality, including strength of ingredients of the specific CSP. The filter dimensions and liquid material to be sterile-filtered shall permit the sterilization process to be completed rapidly, without the replacement of the filter during the process. When CSPs are known to contain excessive particulate matter, a prefilter of larger nominal pore size membrane is placed upstream from the sterilizing filter to remove gross particulate contaminants in order to maximize the efficiency of the sterilizing filter.

Filter units used to sterilize CSPs shall also be subjected to manufacturers' recommended integrity test, such as the bubble point test.

Compounding personnel shall ascertain that selected filters will achieve sterilization of the particular CSPs being sterilized. Large deviations from usual or expected chemical and physical properties of CSPs (e.g., water-miscible alcohols) may cause undetectable damage to filter integrity and shrinkage of microorganisms to sizes smaller than filter nominal pore size.

STERILIZATION OF HIGH-RISK LEVEL CSPS BY STEAM

The process of thermal sterilization employing saturated steam under pressure, or autoclaving, is the preferred method to terminally sterilize aqueous preparations that have been verified to maintain their full chemical and physical stability under the conditions employed (see *Steam Sterilization* under *Sterilization and Sterility Assurance of Compendial Articles* ⟨1211⟩). To achieve sterility, all materials are to be exposed to steam at 121° under a pressure of about 1 atmosphere or 15 psi for the duration verified by testing to achieve sterility of the items, which is usually 20 to 60 minutes for CSPs. An allowance shall be made for the time required for the material to reach 121° before the sterilization exposure duration is timed.

Not directly exposing items to pressurized steam may result in survival of microbial organisms and spores. Before their sterilization, plastic, glass, and metal devices are tightly wrapped in low-particle-shedding paper or fabrics or sealed in envelopes that prevent poststerilization microbial penetration. Immediately before filling ampuls and vials that will be steam sterilized, solutions are passed through a filter having a nominal pore size not larger than 1.2 µm for removal of particulate matter. Sealed containers shall be able to generate steam internally; thus, stoppered and crimped empty vials shall contain a small amount of moisture to generate steam.

The description of steam sterilization conditions and duration for specific CSPs shall be included in written documentation in the compounding facility. The effectiveness of steam sterilization shall be verified using appropriate BIs of *Bacillus stearothermophilus* (see

Copyright (c) 2013 The United States Pharmacopeial Convention. All rights reserved.

Biological Indicators ⟨1035⟩) and other confirmation methods such as temperature-sensing devices (see *Sterilization and Sterility Assurance of Compendial Articles* ⟨1211⟩ and *Sterility Tests* ⟨71⟩).

STERILIZATION OF HIGH-RISK LEVEL CSPs BY DRY HEAT

Dry heat sterilization is usually done as a batch process in an oven designed for sterilization. Heated filtered air shall be evenly distributed throughout the chamber by a blower device. The oven should be equipped with a system for controlling temperature and exposure period. Sterilization by dry heat requires higher temperatures and longer exposure times than does sterilization by steam. Dry heat shall be used only for those materials that cannot be sterilized by steam, when either the moisture would damage the material or the material is impermeable. During sterilization, sufficient space shall be left between materials to allow for good circulation of the hot air. The description of dry heat sterilization conditions and duration for specific CSPs shall be included in written documentation in the compounding facility. The effectiveness of dry heat sterilization shall be verified using appropriate BIs of *Bacillus subtilis* (see *Biological Indicators* ⟨1035⟩) and other confirmation methods such as temperature-sensing devices (see *Sterilization and Sterility Assurance of Compendial Articles* ⟨1211⟩ and *Sterility Tests* ⟨71⟩). [NOTE—Dry heat sterilization may be performed at a lower temperature than may be effective for depyrogenation].

Depyrogenation by Dry Heat

Dry heat depyrogenation shall be used to render glassware or containers such as vials free from pyrogens as well as viable microbes. A typical cycle would be 30 minutes at 250°. The description of the dry heat depyrogenation cycle and duration for specific load items shall be included in written documentation in the compounding facility. The effectiveness of the dry heat depyrogenation cycle shall be verified using endotoxin challenge vials (ECVs). The bacterial endotoxin test should be performed on the ECVs to verify that the cycle is capable of achieving a 3-log reduction in endotoxin (see *Sterilization and Sterility Assurance of Compendial Articles* ⟨1211⟩ and *Bacterial Endotoxins Test* ⟨85⟩).

ENVIRONMENTAL QUALITY AND CONTROL

Achieving and maintaining sterility and overall freedom from contamination of a CSP is dependent on the quality status of the components incorporated, the process utilized, personnel performance, and the environmental conditions under which the process is performed. The standards required for the environmental conditions depend on the amount of exposure of the CSP to the immediate environment anticipated during processing. The quality and control of environmental conditions for each risk level of operation are explained in this section. In addition, operations using nonsterile components require the use of a method of preparation designed to produce a sterile preparation.

Exposure of Critical Sites

Maintaining the sterility and cleanliness (i.e., freedom from sterile foreign materials) of critical sites is a primary safeguard for CSPs. Critical sites are locations that include any component or fluid pathway surfaces (e.g., vial septa, injection ports, beakers) or openings (e.g., opened ampuls, needle hubs) exposed and at risk of direct contact with air (e.g., ambient room or HEPA filtered), moisture (e.g., oral and mucosal secretions), or touch contamination. The risk of, or potential for, critical sites to be contaminated with microorganisms and foreign matter increases with increasing exposed area of the critical sites, the density or concentration of contaminants, and exposure duration to worse than ISO Class 5 (see *Table 1*) air. Examples include an opened ampul or vial stopper on a 10-mL or larger vial or an injection port on a package of intravenous solution having an area larger than the point of a needle or the tip of a syringe.

The nature of a critical site also affects the risk of contamination. The relatively rough, permeable surface of an elastomeric closure retains microorganisms and other contaminants after swabbing with a sterile 70% IPA pad more readily than does the smoother glass surface of the neck of an ampul. Therefore, the surface disinfection can be expected to be more effective for an ampul.

Protection of critical sites by precluding physical contact and airborne contamination shall be given the highest priority in sterile compounding practice. Airborne contaminants, especially those generated by sterile compounding personnel, are much more likely to reach critical sites than are contaminants that are adhering to the floor or other surfaces below the work level. Furthermore, large and high-density particles that are generated and introduced by compounding manipulations and personnel have the potential to settle on critical sites even when those critical sites are exposed within ISO Class 5 (see *Table 1*) air.

ISO Class 5 Air Sources, Buffer Areas, and Ante-Areas

The most common sources of ISO Class 5 (see *Table 1*) air quality for exposure of critical sites are horizontal and vertical LAFWs, CAIs, and CACIs. A clean room (see *Microbiological Control and Monitoring of Aseptic Processing Environments* ⟨1116⟩) is a compounding environment that is supplied with HEPA or HEPA-filtered air that meets ISO Class 7 (see *Table 1*), the access to which is limited to personnel trained and authorized to perform sterile compounding and facility cleaning. A buffer area is an area that provides at least ISO Class 7 (see *Table 1*) air quality.

Figure 1 is a conceptual representation of the placement of an ISO Class 5 (see *Table 1*) PEC in a segregated compounding area used for low-risk level CSPs with 12-hour or less BUD. This plan depicts the most critical operation area located within the PEC in a designated area (see definition of *Segregated Compounding Area*) separated from activities not essential to the preparation of CSPs.

Accessed from 167.78.4.19 by James Cumbie (ocean22) on Mon Sep 09 15:04:23 EDT 2013

Placement of devices (e.g., computers, printers) and objects (e.g., carts, cabinets) that are not essential to compounding in the segregated area should be restricted or limited, depending on their effect on air quality in the ISO Class 5 (see *Table 1*) PEC.

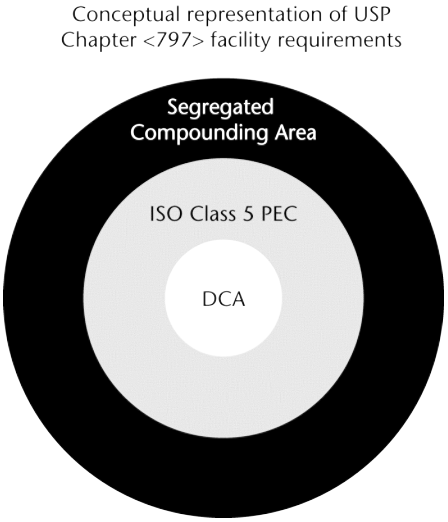

Figure 1. Conceptual representation of the placement of an ISO Class 5 PEC in a segregated compounding area used for low-risk level CSPs with 12-hour or less BUD.

Figure 2 is a conceptual representation of the arrangement of a facility for preparation of CSPs categorized as low-, medium-, and high-risk level. The quality of the environmental air increases with movement from the outer boundary to the direct compounding area (DCA). Placement of devices in ante-areas and buffer areas is dictated by their effect on the designated environmental quality of atmospheres and surfaces, which shall be verified by monitoring (see *Viable and Nonviable Environmental Sampling (ES) Testing*). It is the responsibility of each compounding facility to ensure that each source of ISO Class 5 (see *Table 1*) environment for exposure of critical sites and sterilization by filtration is properly located, operated, maintained, monitored, and verified.

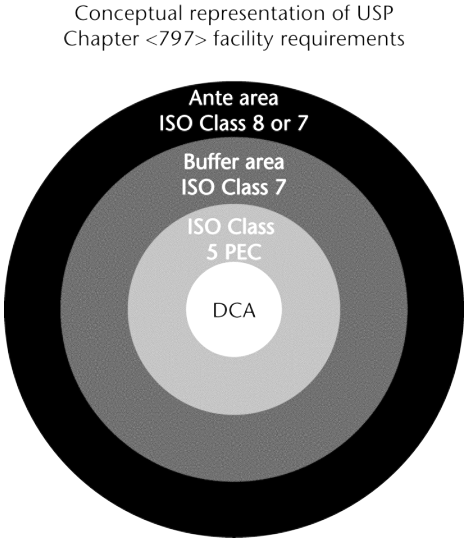

Figure 2. Conceptual representation of the arrangement of a facility for preparation of CSPs categorized as low-, medium-, and high-risk level.

Placement of devices (e.g., computers, printers) and objects (e.g., carts, cabinets) that are not essential to compounding in buffer areas is dictated by their effect on the required environmental quality of air atmospheres and surfaces, which shall be verified by monitoring (see *Viable and Nonviable Environmental Sampling (ES) Testing*). It is the responsibility of each compounding facility to ensure that each source of ISO Class 5 (see *Table 1*) environment for exposure of critical sites and sterilization by filtration is properly located, operated, maintained, monitored, and verified.

Facility Design and Environmental Controls

Compounding facilities are physically designed and environmentally controlled to minimize airborne contamination from contacting critical sites. These facilities shall also provide a comfortable and well-lighted working environment, which typically includes a

Copyright (c) 2013 The United States Pharmacopeial Convention. All rights reserved.

temperature of 20° or cooler, to maintain comfortable conditions for compounding personnel to perform flawlessly when attired in the required aseptic compounding garb. PECs typically include, but are not limited to, LAFWs, BSCs, CAIs, and CACIs, which provide an ISO Class 5 (see *Table 1*) environment for the exposure of critical sites. PECs shall maintain ISO Class 5 (see *Table 1*) or better conditions for 0.5-µm particles (dynamic operating conditions) while compounding CSPs. Secondary engineering controls such as buffer areas and ante-areas generally serve as a core for the location of the PEC. Buffer areas are designed to maintain at least ISO Class 7 (see *Table 1*) conditions for 0.5-µm particles under dynamic conditions and ISO Class 8 (see *Table 1*) conditions for 0.5-µm and larger particles under dynamic conditions for the ante-areas. Airborne contamination control is achieved in the PEC through the use of HEPA filters. The airflow in the PEC shall be unidirectional (laminar flow), and because of the particle collection efficiency of the filter, the "first air" at the face of the filter is, for the purposes of aseptic compounding, free from airborne particulate contamination. HEPA-filtered air shall be supplied in critical areas (ISO Class 5, see *Table 1*) at a velocity sufficient to sweep particles away from the compounding area and maintain unidirectional airflow during operations. Proper design and control prevents turbulence and stagnant air in the critical area. In situ air pattern analysis via smoke studies shall be conducted at the critical area to demonstrate unidirectional airflow and sweeping action over and away from the product under dynamic conditions.

The principles of HEPA-filtered unidirectional airflow in the work environment shall be understood and practiced in the compounding process in order to achieve the desired environmental conditions. Policies and procedures for maintaining and working within the PEC area shall be written and followed. The policies and procedures will be determined by the scope and risk levels of the aseptic compounding activities utilized during the preparation of the CSPs. The CSP work environment is designed to have the cleanest work surfaces (PEC) located in a buffer area. The buffer area shall maintain at least ISO Class 7 (see *Table 1*) conditions for 0.5-µm and larger particles under dynamic operating conditions. The room shall be segregated from surrounding, unclassified spaces to reduce the risk of contaminants being blown, dragged, or otherwise introduced into the filtered unidirectional airflow environment, and this segregation shall be continuously monitored. For rooms providing a physical separation through the use of walls, doors, and pass-throughs, a minimum differential positive pressure of 0.02- to 0.05-inch water column is required. For buffer areas not physically separated from the ante-areas, the principle of displacement airflow shall be employed. This concept utilizes a low pressure differential, high airflow principle. Using displacement airflow typically requires an air velocity of 40 ft per minute or more from the buffer area across the line of demarcation into the ante-area.

The displacement concept shall not be used for high-risk compounding.[6] The PEC shall be placed within a buffer area in such a manner as to avoid conditions that could adversely affect their operation. For example, strong air currents from opened doors, personnel traffic, or air streams from the HVAC systems can disrupt the unidirectional airflow in open-faced workbenches. The operators may also create disruptions in airflow by their own movements and by the placement of objects onto the work surface. The PEC shall be placed out of the traffic flow and in a manner to avoid disruption from the HVAC system and room cross-drafts. Room air exchanges are typically expressed as ACPHs. Adequate HEPA-filtered airflow supplied to the buffer area and ante-area is required to maintain cleanliness classification during operational activity through the number of ACPHs. Factors that should be considered when determining air-change requirements include number of personnel working in the room and compounding processes that generate particulates, as well as temperature effects. An ISO Class 7 (see *Table 1*) buffer area and ante-area supplied with HEPA-filtered air shall receive an ACPH of not less than 30. The PEC is a good augmentation to generating air changes in the air supply of an area but cannot be the sole source of HEPA-filtered air. If the area has an ISO Class 5 (see *Table 1*) recirculating device, a minimum of 15 ACPHs through the area supply HEPA filters is adequate, providing the combined ACPH is not less than 30. More air changes may be required, depending on the number of personnel and processes. HEPA-filtered supply air shall be introduced at the ceiling, and returns should be mounted low on the wall, creating a general top-down dilution of area air with HEPA-filtered make-up air. Ceiling-mounted returns are not recommended. All HEPA filters should be efficiency tested using the most penetrating particle size and should be leak tested at the factory and then leak tested again in situ after installation.[7]

Activities and tasks carried out within the buffer area shall be limited to only those necessary when working within a controlled environment. Only the furniture, equipment, supplies, and other material required for the compounding activities to be performed shall be brought into the area, and they shall be nonpermeable, nonshedding, cleanable, and resistant to disinfectants. Whenever such items are brought into the area, they shall first be cleaned and disinfected. Whenever possible, equipment and other items used in the buffer area shall not be taken out of the area except for calibration, servicing, or other activities associated with the proper maintenance of the item.

The surfaces of ceilings, walls, floors, fixtures, shelving, counters, and cabinets in the buffer area shall be smooth, impervious, free from cracks and crevices, and nonshedding, thereby promoting cleanability and minimizing spaces in which microorganisms and other contaminants may accumulate. The surfaces shall be resistant to damage by disinfectant agents. Junctures of ceilings to walls shall be coved or caulked to avoid cracks and crevices where dirt can accumulate. If ceilings consist of inlaid panels, the panels shall be impregnated with a polymer to render them impervious and hydrophobic, and they shall be caulked around each perimeter to seal them to the support frame. Walls may be constructed of flexible material (e.g., heavy gauge polymer), panels locked together and sealed, or of epoxy-coated gypsum board. Preferably, floors are overlaid with wide sheet vinyl flooring with heat-welded seams and coving to the sidewall. Dust-collecting overhangs, such as ceiling utility pipes, and ledges, such as windowsills, should be avoided. The exterior lens surface of ceiling lighting fixtures should be smooth, mounted flush, and sealed. Any other penetrations through the ceiling or walls shall be sealed. The buffer area shall not contain sources of water (sinks) or floor drains. Work surfaces shall be constructed of smooth, impervious materials, such as stainless steel or molded plastic, so that they are easily cleaned and disinfected. Carts should be of stainless steel wire, nonporous plastic, or sheet metal construction with good quality, cleanable casters to promote mobility. Storage shelving, counters, and cabinets shall be smooth, impervious, free from cracks and crevices, nonshedding, cleanable, and disinfectable; their number, design, and manner of installation shall promote effective cleaning and disinfection.

[6] ISO 14644-4:2001 Cleanrooms and associated controlled environments—Design, construction, and start-up, *Case Postale 56,* CH-1211 Geneve 20, Switzerland, tel. +41 22 749 01 11.
[7] By definition (IEST RP CC 001.4), HEPA filters are a minimum of 99.97% efficient when tested using 0.3-µm thermally generated particles and a photometer or rated at their most penetrating particle size using a particle counter.

Accessed from 167.78.4.19 by James Cumbie (ocean22) on Mon Sep 09 15:04:23 EDT 2013

Placement of Primary Engineering Controls

PECs (LAFWs, BSCs, CAIs, and CACIs) shall be located within a restricted access ISO Class 7 (see *Table 1*) buffer area (see *Figure 1*), with the following CAI/CACI exceptions below:

- Only authorized personnel and materials required for compounding and cleaning shall be permitted in the buffer area.
- Presterilization procedures for high-risk level CSPs, such as weighing and mixing, shall be completed in no worse than an ISO Class 8 (see *Table 1*) environment.
- PECs shall be located out of traffic patterns and away from room air currents that could disrupt the intended airflow patterns.

CAIs and CACIs shall be placed in an ISO Class 7 (see *Table 1*) buffer area *unless* they meet all of the following conditions:

- The isolator shall provide isolation from the room and maintain ISO Class 5 (see *Table 1*) during dynamic operating conditions, including transferring ingredients, components, and devices into and out of the isolator and during preparation of CSPs.
- Particle counts sampled approximately 6 to 12 inches upstream of the critical exposure site shall maintain ISO Class 5 (see *Table 1*) levels during compounding operations.
- Not more than 3520 particles (0.5 µm and larger) per m^3 shall be counted during material transfer, with the particle counter probe located as near to the transfer door as possible without obstructing the transfer.[8]

It is incumbent on the compounding personnel to obtain documentation from the manufacturer that the CAI/CACI will meet this standard when located in environments where the background particle counts exceed ISO Class 8 (see *Table 1*) for 0.5-µm and larger particles. When isolators are used for sterile compounding, the recovery time to achieve ISO Class 5 (see *Table 1*) air quality shall be documented and internal procedures developed to ensure that adequate recovery time is allowed after material transfer before and during compounding operations.

If the PEC is a CAI or CACI that does not meet the requirements above or is a LAFW or BSC that cannot be located within an ISO Class 7 (see *Table 1*) buffer area, then only low-risk level nonhazardous and radiopharmaceutical CSPs pursuant to a physician order for a specific patient may be prepared, and administration of the CSP shall commence within 12 hours of preparation or as recommended in the manufacturer's package insert, whichever is less.

Viable and Nonviable Environmental Sampling (ES) Testing

The ES program should provide information to staff and leadership to demonstrate that the PEC is maintaining an environment within the compounding area that consistently ensures acceptably low viable and nonviable particle levels. The compounding area includes the ISO Class 5 (see *Table 1*) PEC (LAFWs, BSCs, CAIs, and CACIs), buffer areas, ante-areas, and segregated compounding areas.

Environmental sampling shall occur as part a comprehensive quality management program and shall occur minimally under any of the following conditions:

- as part of the commissioning and certification of new facilities and equipment;
- following any servicing of facilities and equipment;
- as part of the re-certification of facilities and equipment (i.e., every 6 months);
- in response to identified problems with end products or staff technique; or
- in response to issues with CSPs, observed compounding personnel work practices, or patient-related infections (where the CSP is being considered as a potential source of the infection).

ENVIRONMENTAL NONVIABLE PARTICLE TESTING PROGRAM

A program to sample nonviable airborne particles differs from that for viable particles in that it is intended to directly measure the performance of the engineering controls used to create the various levels of air cleanliness, for example, ISO Class 5, 7, or 8 (see *Table 1*).

Engineering Control Performance Verification—PECs (LAFWs, BSCs, CAIs, and CACIs) and secondary engineering controls (buffer and ante-areas) are essential components of the overall contamination control strategy for aseptic compounding. As such, it is imperative that they perform as designed and that the resulting levels of contamination be within acceptable limits. Certification procedures such as those outlined in *Certification Guide for Sterile Compounding Facilities* (CAG-003-2006)[9] shall be performed by a qualified individual no less than every 6 months and whenever the device or room is relocated or altered or major service to the facility is performed.

Total Particle Counts—Certification that each ISO classified area, for example, ISO Class 5, 7, and 8 (see *Table 1*), is within established guidelines shall be performed no less than every 6 months and whenever the LAFW, BSC, CAI, or CACI is relocated or the physical structure of the buffer area or ante-area has been altered. Testing shall be performed by qualified operators using current, state-of-the-art electronic equipment with results of the following:

- ISO Class 5: not more than 3520 particles 0.5 µm and larger size per cubic meter of air for any LAFW, BSC, CAI, and CACI;
- ISO Class 7: not more than 352,000 particles of 0.5 µm size and larger per cubic meter of air for any buffer area;
- ISO Class 8: not more than 3,520,000 particles or 0.5 µm size and larger per cubic meter of air for any ante-area.

All certification records shall be maintained and reviewed by supervising personnel or other designated employees to ensure that the controlled environments comply with the proper air cleanliness, room pressures, and ACPHs.

[8] Sample procedures are detailed in CETA Applications Guide CAG-002-2006–section 2.09.
[9] Controlled Environment Testing Association, 1500 Sunday Drive, Ste. 102, Raleigh, NC 27607; www.CETAinternational.org.

Copyright (c) 2013 The United States Pharmacopeial Convention. All rights reserved.

PRESSURE DIFFERENTIAL MONITORING

A pressure gauge or velocity meter shall be installed to monitor the pressure differential or airflow between the buffer area and the ante-area and between the ante-area and the general environment outside the compounding area. The results shall be reviewed and documented on a log at least every work shift (minimum frequency shall be at least daily) or by a continuous recording device. The pressure between the ISO Class 7 (see *Table 1*) and the general pharmacy area shall not be less than 5 Pa (0.02 inch water column). In facilities where low- and medium-risk level CSPs are prepared, differential airflow shall maintain a minimum velocity of 0.2 meters per second (40 feet per minute) between buffer area and ante-area.

ENVIRONMENTAL VIABLE AIRBORNE PARTICLE TESTING PROGRAM

The risk of contaminating a CSP prepared under low-risk level and medium-risk level conditions is highly dependent on proper hand hygiene and garbing practices, compounding personnel aseptic technique, and the presence of surface contamination, assuming that all work is performed in a certified and properly functioning ISO Class 5 (see *Table 1*) PEC and secondary engineering controls, ISO Class 7 (see *Table 1*) buffer area, and ISO Class 8 (see *Table 1*) ante-area. High-risk level CSPs pose the greatest threat to patients because compounding personnel are tasked with the requirement of processing nonsterile components and devices in order to achieve sterility.

A sampling program in conjunction with an observational audit is designed to evaluate the competency of compounding personnel work practices, allowing for the implementation of corrective actions on an ongoing basis (see *Personnel Training and Competency Evaluation of Garbing, Aseptic Work Practices and Cleaning/Disinfection Procedures*).

Sampling Plan—An appropriate environmental sampling plan shall be developed for airborne viable particles based on a risk assessment of compounding activities performed.

Selected sampling sites shall include locations within each ISO Class 5 (see *Table 1*) environment and in the ISO Class 7 and 8 (see *Table 1*) areas and in the segregated compounding areas at greatest risk of contamination (e.g., work areas near the ISO Class 5 [see *Table 1*] environment, counters near doors, pass-through boxes). The plan shall include sample location, method of collection, frequency of sampling, volume of air sampled, and time of day as related to activity in the compounding area and action levels.

Review of the data generated during a sampling event may detect elevated amounts of airborne microbial bioburden; such changes may be indicative of adverse changes within the environment. It is recommended that compounding personnel refer to *Microbiological Control and Monitoring of Aseptic Processing Environments* ⟨1116⟩ and the CDC's "Guidelines for Environmental Infection Control in Healthcare Facilities, 2003" for more information.

Growth Medium—A general microbiological growth medium such as Soybean–Casein Digest Medium shall be used to support the growth of bacteria. Malt extract agar or some other media that supports the growth of fungi shall be used in high-risk level compounding environments. Media used for surface sampling must be supplemented with additives to neutralize the effects of disinfecting agents (e.g., TSA with lecithin and polysorbate 80).

Viable Air Sampling—Evaluation of airborne microorganisms using volumetric collection methods in the controlled air environments (LAFWs, CAIs, clean room or buffer areas, and ante-areas) shall be performed by properly trained individuals for all compounding risk levels.

Impaction shall be the preferred method of volumetric air sampling. Use of settling plates for qualitative air sampling may not be able to determine adequately the quality of air in the controlled environment. The settling of particles by gravity onto culture plates depends on the particle size and may be influenced by air movement. Consequently, the number of colony-forming units (cfu) on a settling plate may not always relate to the concentrations of viable particles in the sampled environment.

For low-, medium-, and high-risk level compounding, air sampling shall be performed at locations that are prone to contamination during compounding activities and during other activities such as staging, labeling, gowning, and cleaning. Locations shall include zones of air backwash turbulence within LAFW and other areas where air backwash turbulence may enter the compounding area (doorways, in and around ISO Class 5 [see *Table 1*] PEC and environments). Consideration should be given to the overall effect the chosen sampling method will have on the unidirectional airflow within a compounding environment.

For low-risk level CSPs with 12-hour or less BUD prepared in a PEC (LAFWs, BSCs, CAIs) that maintains an ISO Class 5 (see *Table 1*), air sampling shall be performed at locations inside the ISO Class 5 (see *Table 1*) environment and other areas that are in close proximity to the ISO Class 5 (see *Table 1*) environment during the certification of the PEC.

Air Sampling Devices—There are a number of manufacturers of electronic air sampling equipment. It is important that personnel refer to the manufacturer's recommended procedures when using the equipment to perform volumetric air sampling procedures. The instructions in the manufacturer's user's manual for verification and use of electric air samplers that actively collect volumes of air for evaluation must be followed. A sufficient volume of air (400 to 1000 liters) shall be tested at each location in order to maximize sensitivity. The volumetric air sampling devices need to be serviced and calibrated as recommended by the manufacturer.

It is recommended that compounding personnel also refer to *Methodology and Instrumentation for Quantitation of Viable Airborne Microorganisms* under *Microbiological Control and Monitoring of Aseptic Processing Environments* ⟨1116⟩, which provides more information on the use of volumetric air samplers and volume of air that should be sampled to detect environmental bioburden excursions.

Air Sampling Frequency and Process—Air sampling shall be performed at least semiannually (i.e., every 6 months) as part of the re-certification of facilities and equipment. If compounding occurs in multiple locations within an institution (e.g., main pharmacy, satellites), environmental sampling is required for each individual compounding area. A sufficient volume of air shall be sampled and the manufacturer's guidelines for use of the electronic air sampling equipment followed. Any facility construction or equipment servicing may require that air sampling be performed during these events.

Accessed from 167.78.4.19 by James Cumbie (ocean22) on Mon Sep 09 15:04:23 EDT 2013

Incubation Period—At the end of the designated sampling or exposure period for air sampling activities, the microbial growth media plates are recovered and their covers secured (e.g., taped), and they are inverted and incubated at a temperature and for a time period conducive to multiplication of microorganisms. TSA should be incubated at 30° to 35° for 48 to 72 hours. Malt extract agar or other suitable fungal media should be incubated at 26° to 30° for 5 to 7 days. The number of discrete colonies of microorganisms are counted and reported as cfu and documented on an environmental sampling form. Counts from air sampling need to be transformed into cfu per cubic meter of air and evaluated for adverse trends.

Action Levels, Documentation, and Data Evaluation—The value of viable microbial sampling of the air in the compounding environment is realized when the data are used to identify and correct an unacceptable situation. Sampling data shall be collected and reviewed on a periodic basis as a means of evaluating the overall control of the compounding environment. If an activity consistently shows elevated levels of microbial growth, competent microbiology personnel shall be consulted.

Any cfu count that exceeds its respective action level (see *Table 2*) should prompt a re-evaluation of the adequacy of personnel work practices, cleaning procedures, operational procedures, and air filtration efficiency within the aseptic compounding location. An investigation into the source of the contamination shall be conducted. Sources could include HVAC systems, damaged HEPA filters, and changes in personnel garbing or work practices. The source of the problem shall be eliminated, the affected area cleaned, and resampling performed.

Counts of cfu are to be used as an approximate measure of the environmental microbial bioburden. Action levels are determined on the basis of cfu data gathered at each sampling location and trended over time. The numbers in *Table 2* should be used only as guidelines. Regardless of the number of cfu identified in the pharmacy, further corrective actions will be dictated by the identification of microorganisms recovered (at least the genus level) by an appropriate credentialed laboratory of any microbial bioburden captured as a cfu using an impaction air sampler. Highly pathogenic microorganisms (e.g., Gram-negative rods, coagulase positive staphylococcus, molds and yeasts) can be potentially fatal to patients receiving CSPs and must be immediately remedied, regardless of cfu count, with the assistance of a competent microbiologist, infection control professional, or industrial hygienist.

Table 2. Recommended Action Levels for Microbial Contamination* †(cfu per cubic meter [1000 liters] of air per plate)

Classification	Air Sample†
ISO Class 5	> 1
ISO Class 7	> 10
ISO Class 8 or worse	> 100

* Guidance for Industry–Sterile Drug Products Produced by Aseptic Processing–Current Good Manufacturing Practice–US HHS, FDA September 2004.

Additional Personnel Requirements

Food, drinks, and materials exposed in patient care and treatment areas shall not enter ante-areas, buffer areas, or segregated compounding areas where components and ingredients of CSPs are present. When compounding activities require the manipulation of a patient's blood-derived or other biological material (e.g., radiolabeling a patient's or donor's white blood cells), the manipulations shall be clearly separated from routine material-handling procedures and equipment used in CSP preparation activities, and they shall be controlled by specific SOPs in order to avoid any cross-contamination. Packaged compounding supplies and components, such as needles, syringes, tubing sets, and small- and large-volume parenterals, should be uncartoned and wiped down with a disinfectant that does not leave a residue (e.g., sterile 70% IPA), when possible in an ante-area of ISO Class 8 (see *Table 1*) air quality, before being passed into the buffer areas. Personnel hand hygiene and garbing procedures are also performed in the ante-area, which may contain a sink that enables hands-free use with a closed system of soap dispensing to minimize the risk of extrinsic contamination. There shall be some demarcation designation that separates the ante-area from the buffer area. Adequate provision for performing antiseptic hand cleansing using an alcohol-based surgical hand scrub with persistent activity followed by the donning of sterile gloves should be provided after entry into the buffer area.

Cleaning and Disinfecting the Compounding Area

Environmental contact is a major source of microbial contamination of CSPs. Consequently, scrupulous attention to cleaning and disinfecting the sterile compounding areas is required to minimize this as a source of CSP contamination.

The cleaning and disinfecting practices and frequencies in this section apply to ISO Class 5 (see *Table 1*) compounding areas for exposure of critical sites as well as buffer areas, ante-areas, and segregated compounding areas. Compounding personnel are responsible for ensuring that the frequency of cleaning is in accordance with the requirements stated in *Table 3* and determining the cleaning and disinfecting products to be used (see *Appendix II*). Any organizational or institutional policies regarding disinfectant selection should be considered by compounding personnel. All cleaning and disinfecting practices and policies for the compounding of CSPs shall be included in written SOPs and shall be followed by all compounding personnel.

The selection and use of disinfectants in healthcare facilities is guided by several properties, such as microbicidal activity, inactivation by organic matter, residue, and shelf life (see *Appendix II*). In general, highly toxic disinfectants, such as glutaraldehyde, are not used on housekeeping surfaces (e.g., floors, countertops). Many disinfectants registered by the EPA are one-step disinfectants. This means that the disinfectant has been formulated to be effective in the presence of light to moderate soiling without a pre-cleaning step.

Surfaces in LAFWs, BSCs, CAIs, and CACIs, which are intimate to the exposure of critical sites, require disinfecting more frequently than do housekeeping surfaces such as walls and ceilings. Disinfecting sterile compounding areas shall occur on a regular basis at the

Copyright (c) 2013 The United States Pharmacopeial Convention. All rights reserved.

intervals noted in *Table 3* when spills occur, when the surfaces are visibly soiled, and when microbial contamination is known to have been or is suspected of having been introduced into the compounding areas.

When the surface to be disinfected has heavy soiling, a cleaning step is recommended prior to the application of the disinfectant. Trained compounding personnel are responsible for developing, implementing, and practicing the procedures for cleaning and disinfecting the DCAs written in the SOPs. Cleaning and disinfecting shall occur before compounding is performed. Items shall be removed from all areas to be cleaned, and surfaces shall be cleaned by removing loose material and residue from spills; for example, water-soluble solid residues are removed with sterile water (for injection or irrigation) and low-shedding wipes. This shall be followed by wiping with a residue-free disinfecting agent such as sterile 70% IPA, which is allowed to dry before compounding begins.

Cleaning and disinfecting surfaces in the LAFWs, BSCs, CAIs, and CACIs are the most critical practices before the preparation of CSPs. Consequently, such surfaces shall be cleaned and disinfected frequently, including at the beginning of each work shift, before each batch preparation is started, every 30 minutes during continuous compounding periods of individual CSPs, when there are spills, and when surface contamination is known or suspected from procedural breaches.

Work surfaces in the ISO Class 7 (see *Table 1*) buffer areas and ISO Class 8 (see *Table 1*) ante-areas as well as segregated compounding areas shall be cleaned and disinfected at least daily, and dust and debris shall be removed when necessary from storage sites for compounding ingredients and supplies using a method that does not degrade the ISO Class 7 or 8 (see *Table 1*) air quality (see *Disinfectants and Antiseptics* ⟨1072⟩).

Table 3. Minimum Frequency of Cleaning and Disinfecting Compounding Areas

Site	Minimum Frequency
ISO Class 5 (see *Table 1*) Primary Engineering Control (e.g., LAFW, BSC, CAI, CACI)	At the beginning of each shift, before each batch, not longer than 30 minutes following the previous surface disinfection when ongoing compounding activities are occurring, after spills, and when surface contamination is known or suspected
Counters and easily cleanable work surfaces	Daily
Floors	Daily
Walls	Monthly
Ceilings	Monthly
Storage shelving	Monthly

Floors in the buffer or clean area, ante-area, and segregated compounding area are cleaned by mopping with a cleaning and disinfecting agent once daily at a time when no aseptic operations are in progress. Mopping shall be performed by trained personnel using approved agents and procedures described in the written SOPs. It is incumbent on compounding personnel to ensure that such cleaning is performed properly. In the buffer or clean area, ante-area, and segregated compounding area, walls, ceilings, and shelving shall be cleaned and disinfected monthly. Cleaning and disinfecting agents are to be used with careful consideration of compatibilities, effectiveness, and inappropriate or toxic residues (see *Appendix II*). Their schedules of use and methods of application shall be in accordance with written SOPs and followed by custodial or compounding personnel.

All cleaning materials, such as wipers, sponges, and mops, shall be nonshedding, preferably composed of synthetic micro fibers, and dedicated to use in the buffer or clean area, ante-area, and segregated compounding areas and shall not be removed from these areas except for disposal. Floor mops may be used in both the buffer or clean area and ante-area, but only in that order. Ideally, all cleaning tools are discarded after one use by collection in suitable plastic bags and removed with minimal agitation. If cleaning materials (e.g., mops) are reused, procedures shall be developed (based on manufacturers' recommendations) that ensure that the effectiveness of the cleaning device is maintained and that repeated use does not add to the bioburden of the area being cleaned.

Supplies and equipment removed from shipping cartons shall be wiped with a suitable disinfecting agent (e.g., sterile 70% IPA) delivered from a spray bottle or other suitable delivery method. After the disinfectant is sprayed or wiped on a surface to be disinfected, the disinfectant shall be allowed to dry, during which time the item shall not be used for compounding purposes.

Wiping with small sterile 70% IPA swabs that are commercially available in individual foil-sealed packages (or a comparable method) is preferred for disinfecting entry points on bags and vials, allowing the IPA to dry before piercing stoppers with sterile needles and breaking necks of ampuls. The surface of the sterile 70% IPA swabs used for disinfecting entry points of sterile packages and devices shall not contact any other object before contacting the surface of the entry point. Sterile 70% IPA wetted gauze pads or other particle-generating material shall not be used to disinfect the sterile entry points of packages and devices.

When sterile supplies are received in sealed pouches designed to keep them sterile until opening, the sterile supplies may be removed from the covering pouches as the supplies are introduced into the ISO Class 5 (see *Table 1*) PEC (LAFW, BSC, CAI, CACI) without the need to disinfect the individual sterile supply items. No shipping or other external cartons may be taken into the buffer or clean area or segregated compounding area.

Personnel Cleansing and Garbing

The careful cleansing of hands and arms and the correct donning of PPE by compounding personnel constitute the first major step in preventing microbial contamination in CSPs. Personnel shall also be thoroughly competent and highly motivated to perform flawless aseptic manipulations with ingredients, devices, and components of CSPs. Squamous cells are normally shed from the human body at a rate of 10^6 or more per hour, and those skin particles are laden with microorganisms.[10, 11] When individuals are experiencing rashes, sunburn, weeping sores, conjunctivitis, active respiratory infection, as well as when they wear cosmetics, they shed these particles at even higher rates. Particles shed from compounding personnel pose an increased risk of microbial contamina-

[10] Agalloco J, Akers JE. Aseptic Processing: A Vision of the Future. *Pharmaceutical Technology*, 2005. Aseptic Processing supplement, s16.
[11] Eaton T. Microbial Risk Assessment for Aseptically Prepared Products. *Am Pharm Rev.* 2005; 8 (5, Sep/Oct): 46–51.

Accessed from 167.78.4.19 by James Cumbie (ocean22) on Mon Sep 09 15:04:23 EDT 2013

tion of critical sites of CSPs. Therefore, compounding personnel with such conditions as mentioned above shall be excluded from working in ISO Class 5 (see *Table 1*) and ISO Class 7 (see *Table 1*) compounding areas until their conditions are remedied.

Before entering the buffer area or segregated compounding area (see *Low-Risk Level CSPs with 12-Hour or Less BUD*), compounding personnel shall remove personal outer garments (e.g., bandannas, coats, hats, jackets, scarves, sweaters, vests); all cosmetics, because they shed flakes and particles; and all hand, wrist, and other visible jewelry or piercings (e.g., earrings, lip or eyebrow piercings) that can interfere with the effectiveness of PPE (e.g., fit of gloves and cuffs of sleeves). The wearing of artificial nails or extenders is prohibited while working in the sterile compounding environment. Natural nails shall be kept neat and trimmed.

Personnel shall don the following PPE in an order that proceeds from those activities considered the dirtiest to those considered the cleanest. Garbing activities considered the dirtiest include donning of dedicated shoes or shoe covers, head and facial hair covers (e.g., beard covers in addition to face masks), and face masks/eye shields. Eye shields are optional unless working with irritants such as germicidal disinfecting agents or when preparing hazardous drugs.

After donning dedicated shoes or shoe covers, head and facial hair covers, and face masks, a hand cleansing procedure shall be performed by removing debris from underneath fingernails using a nail cleaner under running warm water followed by vigorous hand washing. Hands and forearms shall be washed to the elbows for at least 30 seconds with soap (either nonantimicrobial or antimicrobial) and water while in the ante-area. The use of antimicrobial scrub brushes is not recommended because they can cause skin irritation and skin damage. Hands and forearms to the elbows will be completely dried using either lint-free disposable towels or an electronic hand dryer. After completion of hand washing, a nonshedding gown with sleeves that fit snugly around the wrists and enclosed at the neck is donned. Gowns designated for buffer area use shall be worn, and preferably they should be disposable. If reusable gowns are worn, they should be laundered appropriately for buffer area use.

Once inside the buffer area or segregated compounding area (see *Low-Risk Level CSPs with 12-Hour or Less BUD*), and prior to donning sterile powder-free gloves, antiseptic hand cleansing shall be performed using a waterless alcohol-based surgical hand scrub with persistent activity[12] following manufacturers' recommendations. Hands are allowed to dry thoroughly before donning sterile gloves.

Sterile gloves shall be the last item donned before compounding begins. Gloves become contaminated when they contact nonsterile surfaces during compounding activities. Disinfection of contaminated gloved hands may be accomplished by wiping or rubbing sterile 70% IPA to all contact surface areas of the gloves and letting the gloved hands dry thoroughly. Only use gloves that have been tested for compatibility with alcohol disinfection by the manufacturer. Routine application of sterile 70% IPA shall occur throughout the compounding process and whenever nonsterile surfaces (e.g. vials, counter tops, chairs, carts) are touched. Gloves on hands shall also be routinely inspected for holes, punctures, or tears and replaced immediately if such are detected. Antiseptic hand cleansing shall be performed as indicated above. Compounding personnel shall be trained and evaluated in the avoidance of touching critical sites.

When compounding personnel exit the compounding area during a work shift, the exterior gown may be removed and retained in the compounding area if not visibly soiled, to be re-donned during that same work shift only. However, shoe covers, hair and facial hair covers, face masks/eye shields, and gloves shall be replaced with new ones before re-entering the compounding area, and proper hand hygiene shall be performed.

During high-risk compounding activities that precede terminal sterilization, such as weighing and mixing of nonsterile ingredients, compounding personnel shall be garbed and gloved the same as when performing compounding in an ISO Class 5 (see *Table 1*) environment. Properly garbed and gloved compounding personnel who are exposed to air quality that is either known or suspected to be worse than ISO Class 7 (see *Table 1*) shall re-garb PPE along with washing their hands properly, performing antiseptic hand cleansing with a waterless alcohol-based surgical hand scrub, and donning sterile gloves upon re-entering the ISO Class 7 (see *Table 1*) buffer area. When CAIs and CACIs are the source of the ISO Class 5 (see *Table 1*) environment, the garbing and gloving requirements for compounding personnel should be as described above, unless the isolator manufacturer can provide written documentation based on validated environmental testing that any component(s) of PPE or personnel cleansing are not required.

Personnel Training and Competency Evaluation of Garbing, Aseptic Work Practices, and Cleaning/Disinfection Procedures

Personnel who prepare CSPs shall be trained conscientiously and skillfully by expert personnel and through multimedia instructional sources and professional publications in the theoretical principles and practical skills of garbing procedures, aseptic work practices, achieving and maintaining ISO Class 5 (see *Table 1*) environmental conditions, and cleaning and disinfection procedures. This training shall be completed and documented before any compounding personnel begin to prepare CSPs. Compounding personnel shall complete didactic training, pass written competence assessments, undergo skill assessment using observational audit tools, and media-fill testing (see *Appendices III–V*).

Media-fill testing of aseptic work skills shall be performed initially before beginning to prepare CSPs and at least annually thereafter for low- and medium-risk level compounding and semiannually for high-risk level compounding.

Compounding personnel who fail written tests or observational audits or whose media-fill test vials have one or more units showing visible microbial contamination shall be re-instructed and re-evaluated by expert compounding personnel to ensure correction of all aseptic work practice deficiencies. Compounding personnel shall pass all evaluations prior to resuming compounding of sterile preparations. In addition to didactic evaluation and aseptic media fill, compounding personnel must demonstrate proficiency of proper hand hygiene, garbing, and consistent cleaning procedures.

In the event that cleaning and disinfecting procedures are also performed by other support personnel (e.g., institutional environmental services, housekeeping), thorough training of proper hand hygiene, garbing, and cleaning and disinfection procedures shall be done by a qualified aseptic compounding expert. After completion of training, support personnel shall routinely undergo perfor-

[12] *Guideline for Hand Hygiene in Health care Settings,* MMWR, October 25, 2002, vol. 51, No. RR-16 available on the Internet at http://www.cdc.gov/handhygiene/.

Copyright (c) 2013 The United States Pharmacopeial Convention. All rights reserved.

mance evaluation of proper hand hygiene, garbing, and all applicable cleaning and disinfecting procedures conducted by a qualified aseptic compounding expert.

COMPETENCY EVALUATION OF GARBING AND ASEPTIC WORK PRACTICE

The risk of contaminating a CSP prepared under low-risk level and medium-risk level conditions is highly dependent on proper hand hygiene and garbing practices, compounding personnel aseptic technique, and the presence of surface contamination, assuming that all work is performed in a certified and properly functioning ISO Class 5 (see *Table 1*) PEC and secondary engineering controls, ISO Class 7 (see *Table 1*) buffer area, and ISO Class 8 (see *Table 1*) ante-area. High-risk level CSPs pose the greatest threat to patients because compounding personnel are tasked with the requirement of processing nonsterile components and devices in order to achieve sterility. Compounding personnel shall be evaluated initially prior to beginning compounding CSPs and whenever an aseptic media fill is performed using a form such as the *Sample Form for Assessing Hand Hygiene and Garbing Related Practices of Compounding Personnel* (see *Appendix III*) and the personnel glove fingertip sampling procedures indicated below.

Aseptic Work Practice Assessment and Evaluation via Personnel Glove Fingertip Sampling—Sampling of compounding personnel glove fingertips shall be performed for all CSP risk level compounding because direct touch contamination is the most likely source of introducing microorganisms into CSPs prepared by humans. Glove fingertip sampling shall be used to evaluate the competency of personnel in performing hand hygiene and garbing procedures in addition to educating compounding personnel on proper work practices, which include frequent and repeated glove disinfection using sterile 70% IPA during actual compounding of CSPs. All personnel shall demonstrate competency in proper hand hygiene and garbing procedures and in aseptic work practices (e.g., disinfection of component surfaces, routine disinfection of gloved hands).

Sterile contact agar plates shall be used to sample the gloved fingertips of compounding personnel after garbing in order to assess garbing competency and after completing the media-fill preparation (without applying sterile 70% IPA) in order to assess the adequacy of aseptic work practices prior to being initially allowed to prepare CSPs for human use and for more experienced personnel to maintain their qualifications to prepare CSPs for human use.

Garbing And Gloving Competency Evaluation—Compounding personnel shall be visually observed during the process of performing hand hygiene and garbing procedures (see *Personnel Cleansing and Garbing* under *Personnel Training and Evaluation in Aseptic Manipulation Skills* above). The visual observation shall be documented on a form such as the *Sample Form for Assessing Hand Hygiene and Garbing Related Practices of Compounding Personnel* (see *Appendix III*) and maintained to provide a permanent record and long-term assessment of personnel competency.

Gloved Fingertip Sampling—All compounding personnel shall successfully complete an initial competency evaluation and gloved fingertip/thumb sampling procedure (zero cfu) no less than three times before initially being allowed to compound CSPs for human use. Immediately after the compounding employee completes the hand hygiene and garbing procedure (e.g., donning of sterile gloves prior to any disinfection with sterile 70% IPA), the evaluator will collect a gloved fingertip and thumb sample from both hands of the compounding employee onto appropriate agar plates by lightly pressing each fingertip into the agar. The plates will be incubated for the appropriate incubation period and at the appropriate temperature (see *Incubation Period*). After completing the initial gowning and gloving competency evaluation, re-evaluation of all compounding personnel for this competency shall occur at least annually for personnel who compound low- and medium-risk level CSPs and semi-annually for personnel who compound high-risk level CSPs using one or more sample collections during any media-fill test procedure before they are allowed to continue compounding CSPs for human use.

Immediately prior to sampling, gloves shall not be disinfected with sterile 70% IPA. Disinfecting gloves immediately before sampling will provide false negative results. Plates filled with nutrient agar with neutralizing agents such as lecithin and polysorbate 80 added shall be used when sampling personnel fingertips. Personnel shall "touch" the agar with the fingertips of both hands in separate plates in a manner to create a slight impression in the agar. The sampled gloves shall be immediately discarded and proper hand hygiene performed after sampling. The nutrient agar plates shall be incubated as stated below (see *Incubation Period*). Results should be reported separately as number of cfu per employee per hand (left hand, right hand). The cfu action level for gloved hands will be based on the total number of cfu on both gloves, not per hand.

Incubation Period—At the end of the designated sampling period for compounding personnel competency assessment activities (surface or personnel), the agar plates are recovered and covers secured and they are inverted and incubated at a temperature and for a time period conducive to multiplication of microorganisms. TSA with lecithin and polysorbate 80 shall be incubated at 30° to 35° for 48 to 72 hours.

Aseptic Manipulation Competency Evaluation—After successful completion of an initial Hand Hygiene and Garbing Competency Evaluation, all compounding personnel shall have their aseptic technique and related practice competency evaluated initially during the *Media-Fill Test Procedure* and subsequent annual or semi-annual *Media-Fill Test Procedures*. Records of these evaluations will be maintained using a form such as the *Sample Form for Assessing Aseptic Technique and Related Practices of Compounding Personnel* (see *Appendix IV*) and maintained to provide a permanent record of and long-term assessment of personnel competency.

Media-Fill Test Procedure—The skill of personnel to aseptically prepare CSPs shall be evaluated using sterile fluid bacterial culture media-fill verification, (i.e., sterile bacterial culture medium transfer via a sterile syringe and needle). Media-fill testing is used to assess the quality of the aseptic skill of compounding personnel. Media-fill tests shall represent the most challenging or stressful conditions actually encountered by the personnel being evaluated when they prepare low- and medium-risk level CSPs and when sterilizing high-risk level CSPs. Media-fill challenge tests are also used to verify the capability of the compounding environment and processes to produce sterile preparations.

A commercially available sterile fluid culture media, such as Soybean–Casein Digest Medium (see *Sterility Tests* ⟨71⟩), that is able to promote exponential colonization of bacteria that are most likely to be transmitted to CSPs from the compounding personnel and environment is commonly used. For high-risk level CSPs nonsterile commercially available Soybean–Casein Digest Medium may be

Accessed from 167.78.4.19 by James Cumbie (ocean22) on Mon Sep 09 15:04:23 EDT 2013

used to make a 3% solution. Normal processing steps, including filter sterilization, shall be mimicked. Media-filled vials shall be incubated at 20° to 25° or at 30° to 35° for a minimum of 14 days. If two temperatures are used for incubation of media-filled samples, then these filled containers should be incubated for at least 7 days at each temperature (see *Microbiological Control and Monitoring of Aseptic Processing Environments* ⟨1116⟩). Failure is indicated by visible turbidity in any one of the media-fill units on or before 14 days. Other methodologies recommended by a competent microbiologist to enhance recovery time and sensitivity to detect microbial contamination may be considered (see *CSP Microbial Contamination Risk Levels* for examples of media-fill procedures).

SURFACE CLEANING AND DISINFECTION SAMPLING AND ASSESSMENT

Surface sampling is an important component of the maintenance of a suitable microbially controlled environment for compounding CSPs, especially since transfer of microbial contamination from improperly disinfected work surfaces via inadvertent touch contact by compounding personnel can be a potential source of contamination into CSPs. It is useful for evaluating facility and work surface cleaning and disinfecting procedures and employee competency in work practices such as disinfection of component/vial surface cleaning. Surface sampling shall be performed in all ISO classified areas on a periodic basis. Sampling can be accomplished using contact plates or swabs, and it shall be done at the conclusion of compounding. Locations to be sampled shall be defined in a sample plan or on a form. The size of the plate to be used for each sampled location usually ranges from 24 to 30 cm^2. Contact plates are filled with general solid agar growth medium and neutralizing agents above the rim of the plate, and they are used for sampling regular or flat surfaces. Swabs may be used for sampling irregular surfaces, especially for equipment (see *Microbiological Control and Monitoring of Aseptic Processing Environments* ⟨1116⟩).

Cleaning and Disinfecting Competency Evaluation—Compounding personnel and other personnel responsible for cleaning shall be visually observed during the process of performing cleaning and disinfecting procedures, during initial personnel training on cleaning procedures, during changes in cleaning staff, and at the completion of any media-fill test procedure (see *Cleaning and Disinfecting of Compounding Areas*).

The visual observation shall be documented using a form such as the *Sample Form for Assessing Cleaning and Disinfection Procedures* (see *Appendix V*) and maintained to provide a permanent record and long-term assessment of personnel competency.

Surface Collection Methods—To sample surfaces using a contact plate, gently touch the sample area with the agar surface and roll the plate across the surface to be sampled. The contact plate will leave a growth media residue behind; therefore, immediately after sampling with the contact plate, the sampled area shall be thoroughly wiped with a nonshedding wipe soaked in sterile 70% IPA.

If an area is sampled via the swab method, collection of the sample is processed by using appropriate procedures that will result in the surface location equivalent to that of a contact plate. After swabbing the surface to be sampled, swabs are placed in an appropriate diluent; an aliquot is planted on or in the specified nutrient agar. Results should be reported as cfu per unit of surface area.

Action Levels, Documentation, and Data Evaluation

The value of viable microbial monitoring of gloved fingertips and surfaces of components and the compounding environment are realized when the data are used to identify and correct an unacceptable work practice. Sampling data shall be collected and reviewed on a routine basis as a means of evaluating the overall control of the compounding environment. If an activity consistently shows elevated levels of microbial growth, competent microbiology personnel shall be consulted.

Any cfu count that exceeds its respective action level (see *Table 4*) should prompt a re-evaluation of the adequacy of personnel work practices, cleaning procedures, operational procedures, and air filtration efficiency within the aseptic compounding location. An investigation into the source of the contamination shall be conducted. Sources could include HVAC systems, damaged HEPA filters, and changes in personnel garbing or working practices. The source of the problem shall be eliminated, the affected area cleaned, and resampling performed.

When gloved fingertip sample results exceed action levels after proper incubation, a review of hand hygiene and garbing procedures as well as glove and surface disinfection procedures and work practices shall be performed and documented. Employee training may be required to correct the source of the problem.

Counts of cfu are to be used as an approximate measure of the environmental microbial bioburden. Action levels are determined on the basis of cfu data gathered at each sampling location and trended over time. The numbers in *Table 4* should be used only as guidelines. Regardless of the number of cfu identified in the compounding facility, further corrective actions will be dictated by the identification of microorganisms recovered (at least the genus level) by an appropriate credentialed laboratory of any microbial bioburden captured as a cfu using an impaction air sampler. Highly pathogenic microorganisms (e.g., Gram-negative rods, coagulase positive staphylococcus, molds and yeasts) can be potentially fatal to patients receiving CSPs and shall be immediately remedied, regardless of cfu count, with the assistance of a competent microbiologist, infection control professional, or industrial hygienist.

Copyright (c) 2013 The United States Pharmacopeial Convention. All rights reserved.

Table 4. Recommended Action Levels for Microbial Contamination*

Classification	Fingertip Sample	Surface Sample (Contact Plate) (cfu per plate)
ISO Class 5	> 3	> 3
ISO Class 7	N/A	> 5
ISO Class 8 or worse	N/A	> 100

* Pharmaceutical Inspection Co-operation Scheme (PIC/S) Guide to Good Manufacturing Practice for Medicinal Products Annexes PE 009-6, 5 April 2007.

SUGGESTED STANDARD OPERATING PROCEDURES (SOPs)

The compounding facility shall have written, properly approved SOPs designed to ensure the quality of the environment in which a CSP is prepared. The following procedures are recommended:

1. Access to the buffer area is restricted to qualified personnel with specific responsibilities or assigned tasks in the compounding area.
2. All cartoned supplies are decontaminated in the area by removing them from shipping cartons and wiping or spraying them with a nonresidue-generating disinfecting agent while they are being transferred to a clean and properly disinfected cart or other conveyance for introduction into the buffer area. Manufacturers' directions or published data for minimum contact time will be followed. Individual pouched sterile supplies need not be wiped because the pouches can be removed as these sterile supplies are introduced into the buffer area.
3. Supplies that are required frequently or otherwise needed close at hand but not necessarily needed for the scheduled operations of the shift are decontaminated and stored on shelving in the ante-area.
4. Carts used to bring supplies from the storeroom cannot be rolled beyond the demarcation line in the ante-area, and carts used in the buffer area cannot be rolled outward beyond the demarcation line unless cleaned and disinfected before returning.
5. Generally, supplies required for the scheduled operations of the shift are wiped down with an appropriate disinfecting agent and brought into the buffer area, preferably on one or more movable carts. Supplies that are required for back-up or general support of operations may be stored on the designated shelving in the buffer area, but excessive amounts of supplies are to be avoided.
6. Nonessential objects that shed particles shall not be brought into the buffer area, including pencils, cardboard cartons, paper towels, and cotton items (e.g., gauze pads).
7. Essential paper-related products (e.g., paper syringe overwraps, work records contained in a protective sleeve) shall be wiped down with an appropriate disinfecting agent prior to being brought into the buffer area.
8. Traffic flow in and out of the buffer area shall be minimized.
9. Personnel preparing to enter the buffer area shall remove all personal outer garments, cosmetics (because they shed flakes and particles), and all hand, wrist, and other visible jewelry or piercings that can interfere with the effectiveness of PPE.
10. Personnel entering the ante-area shall don attire as described in *Personnel Cleansing and Garbing* and *Personnel Training and Competency Evaluation of Garbing, Aseptic Work Practices and Cleaning/Disinfection Procedures*.
11. Personnel shall then thoroughly wash hands and forearms to the elbow with soap and water for at least 30 seconds. An air dryer or disposable nonshedding towels are used to dry hands and forearms after washing.
12. Personnel entering the buffer area shall perform antiseptic hand cleansing prior to donning sterile gloves using a waterless alcohol-based surgical hand scrub with persistent activity.
13. Chewing gum, drinks, candy, or food items shall not be brought into the buffer area or ante-area. Materials exposed in patient care and treatment areas shall never be introduced into areas where components and ingredients for CSPs are present.
14. At the beginning of each compounding activity session, and whenever liquids are spilled, the surfaces of the direct compounding environment are first cleaned with USP Purified Water to remove water-soluble residues. Immediately thereafter, the same surfaces are disinfected with a nonresidue-generating agent using a nonlinting wipe.
15. Primary engineering controls shall be operated continuously during compounding activity. When the blower is turned off and before other personnel enter to perform compounding activities, only one person shall enter the buffer area for the purposes of turning on the blower (for at least 30 minutes) and disinfecting the work surfaces.
16. Traffic in the area of the DCA is minimized and controlled.
17. Supplies used in the DCA for the planned procedures are accumulated and then decontaminated by wiping or spraying the outer surface with sterile 70% IPA or removing the outer wrap at the edge of the DCA as the item is introduced into the aseptic work area.
18. All supply items are arranged in the DCA so as to reduce clutter and provide maximum efficiency and order for the flow of work.
19. After proper introduction into the DCA of supply items required for and limited to the assigned operations, they are so arranged that a clear, uninterrupted path of HEPA-filtered air will bathe all critical sites at all times during the planned procedures. That is, no objects may be placed between the first air from HEPA filters and an exposed critical site.
20. All procedures are performed in a manner designed to minimize the risk of touch contamination. Gloves are disinfected with adequate frequency with an approved disinfectant such as sterile 70% IPA.
21. All rubber stoppers of vials and bottles and the necks of ampuls are disinfected by wiping with sterile 70% IPA and waiting for at least 10 seconds before they are used to prepare CSPs.
22. After the preparation of every CSP, the contents of the container are thoroughly mixed and then inspected for the presence of particulate matter, evidence of incompatibility, or other defects.

Accessed from 167.78.4.19 by James Cumbie (ocean22) on Mon Sep 09 15:04:23 EDT 2013

23. After procedures are completed, used syringes, bottles, vials, and other supplies are removed, but with a minimum of exit and re-entry into the DCA so as to minimize the risk of introducing contamination into the aseptic workspace.

ELEMENTS OF QUALITY CONTROL

A written description of specific training and performance evaluation program for individuals involved in the use of aseptic techniques for the preparation of sterile products shall be developed for each site. This program equips personnel with the appropriate knowledge and trains them in the required skills necessary to perform the assigned tasks. Each person assigned to the aseptic area in the preparation of sterile products shall successfully complete specialized training in aseptic techniques and aseptic area practices prior to preparing CSPs (see *Personnel Training and Evaluation in Aseptic Manipulation Skills* and *Personnel Training and Competency Evaluation of Garbing, Aseptic Work Practices and Cleaning/Disinfection Procedures*).

Ingredients and Devices

Compounding personnel ascertain that ingredients for CSPs are of the correct identity and appropriate quality using the following information: vendor labels, labeling, certificates of analysis, direct chemical analysis, and knowledge of compounding facility storage conditions.

STERILE INGREDIENTS AND DEVICES

Commercially available sterile drug products, sterile ready-to-use containers, and devices are examples of sterile components. A written procedure for unit-by-unit physical inspection preparatory to use is followed to ensure that these components are sterile, free from defects, and otherwise suitable for their intended use.

NONSTERILE INGREDIENTS AND DEVICES

If any nonsterile components, including containers and ingredients, are used to make a CSP, such CSPs must be high risk. Nonsterile active ingredients and added substances or excipients for CSPs should preferably be official *USP* or *NF* articles. When nonofficial ingredients are used, they shall be accompanied by certificates of analysis from their suppliers to aid compounding personnel in judging the identity, quality, and purity in relation to the intended use in a particular CSP. Physical inspection of a package of ingredients is necessary in order to detect breaks in the container, looseness in the cap or closure, and deviation from the expected appearance, aroma, and texture of the contents.

Bulk or unformulated drug substances and added substances or excipients shall be stored in tightly closed containers under temperature, humidity, and lighting conditions that are either indicated in official monographs or approved by suppliers. The date of receipt by the compounding facility shall be clearly and indelibly marked on each package of ingredient. After receipt by the compounding facility, packages of ingredients that lack a supplier's expiration date cannot be used after 1 year unless either appropriate inspection or testing indicates that the ingredient has retained its purity and quality for use in CSPs.

Careful consideration and evaluation of nonsterile ingredient sources is especially warranted when the CSP will be administered into the vascular system, central nervous system, or eyes.

Upon receipt of each lot of the bulk drug substance or excipient used for CSPs, the individual compounding the preparation performs a visual inspection of the lot for evidence of deterioration, other types of unacceptable quality, and wrong identification. For bulk drug substances or excipients, visual inspection is performed on a routine basis as described in the written protocol.

Equipment

It is necessary that equipment, apparatus, and devices used to compound a CSP be consistently capable of operating properly and within acceptable tolerance limits. Written procedures outlining required equipment calibration, annual maintenance, monitoring for proper function, and controlled procedures for use of the equipment and specified time frames for these activities are established and followed. Routine maintenance and frequencies shall be outlined in these SOPs. Results from the equipment calibration, annual maintenance reports, and routine maintenance are kept on file for the lifetime of the equipment. Personnel are prepared through an appropriate combination of specific training and experience to operate or manipulate any piece of equipment, apparatus, or device they may use when preparing CSPs. Training includes gaining the ability to determine whether any item of equipment is operating properly or is malfunctioning.

VERIFICATION OF AUTOMATED COMPOUNDING DEVICES (ACDs) FOR PARENTERAL NUTRITION COMPOUNDING

ACDs for the preparation of parenteral nutrition admixtures are widely used by pharmacists in hospitals and other healthcare settings. They are designed to streamline the labor-intensive processes involved in the compounding of these multiple-component formulations by automatically delivering the individual nutritional components in a predetermined sequence under computerized control. Parenteral nutrition admixtures often contain 20 or more individual additives representing as many as 50 or more individual components (e.g., 15 to 20 crystalline amino acids, dextrose monohydrate, and lipids; 10 to 12 electrolyte salts; 5 to 7 trace

Copyright (c) 2013 The United States Pharmacopeial Convention. All rights reserved.

minerals; and 12 vitamins). Thus, ACDs can provide improved accuracy and precision of the compounding process over the traditional manual compounding methods.

Accuracy

The accuracy of an ACD can be determined in various ways to ensure that the correct quantities of nutrients, electrolytes, or other nutritional components are delivered to the final infusion container. Initially, the ACD is tested for its volume and weight accuracy. For volume accuracy, a suitable volume of Sterile Water for Injection, USP, which represents a typical additive volume (e.g., 40 mL for small-volume range of 1 to 100 mL, 300 mL for large-volume range of 100 to 1000 mL), is programmed into the ACD and delivered to the appropriate volumetric container. The compounding personnel should then consult *Volumetric Apparatus* ⟨31⟩ for appropriate parameters to assess the volumetric performance of the ACD. For gravimetric accuracy, the balance used in conjunction with the ACD is tested using various weight sizes that represent the amounts typically used to deliver the various additives. Compounding personnel should consult *Weights and Balances* ⟨41⟩ for acceptable tolerances of the weights used. In addition, the same volume of *Sterile Water for Injection* used to assess volumetric accuracy is then weighed on the balance used in conjunction with the ACD. For example, if 40 mL of water was used in the volumetric assessment, its corresponding weight should be about 40 g (assuming the relative density of water is 1.0). In addition, during the use of the ACD, certain additives, such as potassium chloride (corrected for density differences), can also be tested in the same manner as with an in-process test.

Finally, additional tests of accuracy may be employed that determine the content of certain ingredients in the final volume of the parenteral nutrition admixture. Generally, pharmacy departments do not have the capability to routinely perform chemical analyses such as analyses of dextrose or electrolyte concentrations. Consequently, hospital or institutional laboratories may be called upon to perform these quality assurance tests. However, the methods in such laboratories are often designed for biological, not pharmaceutical, systems. Thus, their testing procedures shall be verified to meet the *USP* requirements stated in the individual monograph for the component being tested. For example, under *Dextrose Injection*, the following is stated: It contains not less than 95.0% and not more than 105.0% of the labeled amount of $C_6H_{12}O_6 \cdot H_2O$. The hospital or institutional chemistry laboratories must validate their methods to apply to this range and correct for their typical measurement of anhydrous dextrose versus dextrose monohydrate. Similar ranges and issues exist, for example, for injections of calcium gluconate, magnesium sulfate, and potassium chloride. The critical point is the use of *USP* references and possible laboratory procedural differences.

Precision

The intermediate precision of the ACD can be determined on the basis of the day-to-day variations in performance of the accuracy measures. Thus, compounding personnel shall keep a daily record of the above-described accuracy assessments and review the results over time. This review shall occur at least at weekly intervals to avoid potentially clinically significant cumulative errors over time. This is especially true for additives with a narrow therapeutic index, such as potassium chloride.

FINISHED PREPARATION RELEASE CHECKS AND TESTS

The following quality metrics shall be performed for all CSPs before they are dispensed or administered.

Inspection of Solution Dosage Forms and Review of Compounding Procedures

All CSPs that are intended to be solutions shall be visually examined for the presence of particulate matter and not administered or dispensed when such matter is observed. The prescription orders, written compounding procedure, preparation records, and expended materials used to make CSPs at all contamination risk levels are inspected for accuracy of correct identities and amounts of ingredients, aseptic mixing and sterilization, packaging, labeling, and expected physical appearance before they are administered or dispensed.

PHYSICAL INSPECTION

Finished CSPs are individually inspected in accordance with written procedures after compounding. If not distributed promptly, these CSPs are individually inspected just prior to leaving the storage area. Those CSPs that are not immediately distributed are stored in an appropriate location as described in the written procedures. Immediately after compounding, and as a condition of release, each CSP unit, where possible, should be inspected against lighted white or black background or both for evidence of visible particulates or other foreign matter. Prerelease inspection also includes container–closure integrity and any other apparent visual defect. CSPs with observed defects should be immediately discarded or marked and segregated from acceptable products in a manner that prevents their administration. When CSPs are not distributed promptly after preparation, a predistribution inspection is conducted to ensure that a CSP with defects, such as precipitation, cloudiness, and leakage, which may develop between the time of release and the time of distribution, is not released.

Compounding Accuracy Checks

Written procedures for double-checking compounding accuracy shall be followed for every CSP during preparation and immediately prior to release. The double-check system should meet state regulations and include label accuracy and accuracy of the addition of all drug products or ingredients used to prepare the finished product and their volumes or quantities. The used additive

Accessed from 167.78.4.19 by James Cumbie (ocean22) on Mon Sep 09 15:04:23 EDT 2013

containers and, for those additives for which the entire container was not expended, the syringes used to measure the additive should be quarantined with the final products until the final product check is completed. Compounding personnel shall visually confirm that ingredients measured in syringes match the written order being compounded. Preferably, a person other than the compounder can verify that correct volumes of correct ingredients were measured to make each CSP. For example, compounding personnel would pull the syringe plunger back to the volume measured.

When practical, the accuracy of measurements is confirmed by weighing a volume of the measured fluid, then calculating that volume by dividing the weight by the accurate value of the density, or specific gravity, of the measured fluid. Correct density or specific gravity values programmed in ACDs, which measure by weight using the quotient of the programmed volume divided by the density or specific gravity, shall be confirmed to be accurate before and after delivering volumes of the liquids assigned to each channel or port. These volume accuracy checks and the following additional safety and accuracy checks in this section shall be included in the SOP manual of the CSP facility.

Sterility Testing

All high-risk level CSPs that are prepared in groups of more than 25 identical individual single-dose packages (e.g., ampuls, bags, syringes, vials) or in multiple-dose vials (MDVs) for administration to multiple patients or that are exposed longer than 12 hours at 2° to 8° and longer than 6 hours at warmer than 8° before they are sterilized shall meet the sterility test (see *Sterility Tests* ⟨71⟩) before they are dispensed or administered. The *Membrane Filtration* method is the method of choice where feasible (e.g., components are compatible with the membrane). A method not described in the *USP* may be used if verification results demonstrate that the alternative is at least as effective and reliable as the *USP Membrane Filtration* method or the *USP Direct Inoculation of the Culture Medium* method where the *Membrane Filtration* method is not feasible.

When high-risk level CSPs are dispensed before receiving the results of their sterility tests, there shall be a written procedure requiring daily observation of the incubating test specimens and immediate recall of the dispensed CSPs when there is any evidence of microbial growth in the test specimens. In addition, the patient and the physician of the patient to whom a potentially contaminated CSP was administered are notified of the potential risk. Positive sterility test results should prompt a rapid and systematic investigation of aseptic technique, environmental control, and other sterility assurance controls to identify sources of contamination and correct problems in the methods or processes.

Bacterial Endotoxin (Pyrogen) Testing

All high-risk level CSPs, except those for inhalation and ophthalmic administration, that are prepared in groups of more than 25 identical individual single-dose packages (e.g., ampuls, bags, syringes, vials) or in MDVs for administration to multiple patients or that are exposed longer than 12 hours at 2° to 8° and longer than 6 hours at warmer than 8° before they are sterilized shall be tested to ensure that they do not contain excessive bacterial endotoxins (see *Bacterial Endotoxins Test* ⟨85⟩ and *Pyrogen Test* ⟨151⟩). In the absence of a bacterial endotoxins limit in the official monograph or other CSP formula source, the CSP shall not exceed the amount of USP Endotoxin Units (per hour per kilogram of body weight or square meters of body surface area) specified in *Bacterial Endotoxins Test* ⟨85⟩ referenced above for the appropriate route of administration.

Identity and Strength Verification of Ingredients

Compounding facilities shall have at least the following written procedures for verifying the correct identity and quality of CSPs before they are dispensed and administered:

1. That labels of CSPs bear correct names and amounts or concentrations of ingredients, the total volume, the BUD, the appropriate route(s) of administration, the storage conditions, and other information for safe use.
2. That there are correct identities, purities, and amounts of ingredients by comparing the original written order with the written compounding record for the CSP.
3. That correct fill volumes in CSPs and correct quantities of filled units of the CSPs were obtained. When the strength of finished CSPs cannot be confirmed to be accurate, based on the above three inspections, the CSPs shall be assayed by methods that are specific for the active ingredients.

STORAGE AND BEYOND-USE DATING

BUDs for compounded preparations are usually assigned on the basis of professional experience, which should include careful interpretation of appropriate information sources for the same or similar formulations (see *Stability Criteria and Beyond-Use Dating* under *Pharmaceutical Compounding—Nonsterile Preparations* ⟨795⟩). BUDs for CSPs are rarely based on preparation-specific chemical assay results, which are used with the Arrhenius equation to determine expiration dates (see *General Notices and Requirements*) for manufactured products. The majority of CSPs are aqueous solutions in which hydrolysis of dissolved ingredients is the most common chemical degradation reaction. The extent of hydrolysis and other heat-catalyzed degradation reactions at any particular time point in the life of a CSP represents the thermodynamic sum of exposure temperatures and durations. Such lifetime stability exposure is represented in the mean kinetic temperature calculation (see *Pharmaceutical Calculations in Prescription Compounding* ⟨1160⟩). Drug hydrolysis rates increase exponentially with arithmetic temperature increase; thus, exposure of a beta-lactam antibiotic solution for 1 day at controlled room temperature (see *General Notices and Requirements*) will have an equivalent effect on the extent of hydrolysis of approximately 3 to 5 days in cold temperatures (see *General Notices and Requirements*).

Personnel who prepare, dispense, and administer CSPs shall store them strictly in accordance with the conditions stated on the label of ingredient products and finished CSPs. When CSPs are known to have been exposed to temperatures warmer than the

Copyright (c) 2013 The United States Pharmacopeial Convention. All rights reserved.

warmest labeled limit or to temperatures exceeding 40° (see *General Notices and Requirements*) for more than 4 hours, such CSPs should be discarded unless direct assay data or appropriate documentation confirms their continued stability.

Determining Beyond-Use Dates

BUDs and expiration dates are not the same (see *General Notices and Requirements*). Expiration dates for the chemical and physical stability of manufactured sterile products are determined from results of rigorous analytical and performance testing, and they are specific for a particular formulation in its container and at stated exposure conditions of illumination and temperature. When CSPs deviate from conditions in the approved labeling of manufactured products contained in CSPs, compounding personnel may consult the manufacturer of particular products for advice on assigning BUDs based on chemical and physical stability parameters. BUDs for CSPs that are prepared strictly in accordance with manufacturers' product labeling shall be those specified in that labeling or from appropriate literature sources or direct testing. BUDs for CSPs that lack justification from either appropriate literature sources or by direct testing evidence shall be assigned as described in *Stability Criteria and Beyond-Use Dating* under *Pharmaceutical Compounding—Nonsterile Preparations ⟨795⟩*.

In addition, compounding personnel may refer to applicable publications to obtain relevant stability, compatibility, and degradation information regarding the drug or its congeners. When assigning a beyond-use date, compounding personnel should consult and apply drug-specific and general stability documentation and literature where available, and they should consider the nature of the drug and its degradation mechanism, the container in which it is packaged, the expected storage conditions, and the intended duration of therapy (see *Expiration Date and Beyond-Use Date* under *Labeling* in the *General Notices and Requirements*). Stability information must be carefully interpreted in relation to the actual compounded formulation and conditions for storage and use. Predictions based on other evidence, such as publications, charts, and tables, would result in theoretical BUDs. Theoretically predicted beyond-use dating introduces varying degrees of assumptions and, hence, a likelihood of error or at least inaccuracy. The degree of error or inaccuracy would be dependent on the extent of differences between the CSPs' characteristics (e.g., composition, concentration of ingredients, fill volume, container type and material) and the characteristics of the products from which stability data or information is to be extrapolated. The greater the doubt of the accuracy of theoretically predicted beyond-use dating, the greater the need to determine dating periods experimentally. Theoretically predicted beyond-use dating periods should be carefully considered for CSPs prepared from nonsterile bulk active ingredients having therapeutic activity, especially where these CSPs are expected to be compounded routinely. When CSPs will be distributed to and administered in residential locations other than healthcare facilities, the effect of potentially uncontrolled and unmonitored temperature conditions shall be considered when assigning BUDs. It must be ascertained that CSPs will not be exposed to warm temperatures (see *General Notices and Requirements*) unless the compounding facility has evidence to justify stability of CSPs during such exposure.

It should be recognized that the truly valid evidence of stability for predicting beyond-use dating can be obtained only through product-specific experimental studies. Semiquantitative procedures such as thin-layer chromatography (TLC) may be acceptable for many CSPs. However, quantitative stability-indicating assays such as high-performance liquid chromatographic (HPLC) assays would be more appropriate for certain CSPs. Examples include CSPs with a narrow therapeutic index, where close monitoring or dose titration is required to ensure therapeutic effectiveness and to avoid toxicity; where a theoretically established beyond-use dating period is supported by only marginal evidence; or where a significant margin of safety cannot be verified for the proposed beyond-use dating period. In short, because beyond-use dating periods established from product-specific data acquired from the appropriate instrumental analyses are clearly more reliable than those predicted theoretically, the former approach is strongly urged to support dating periods exceeding 30 days.

To ensure consistent practices in determining and assigning BUDs, the compounding facility should have written policies and procedures governing the determination of the BUDs for all compounded products. When attempting to predict a theoretical BUD, a compounded or an admixed preparation should be considered as a unique system that has physical and chemical properties and stability characteristics that differ from its components. For example, antioxidant, buffering, or antimicrobial properties of a sterile vial for injection (SVI) might be lost upon its dilution, with the potential of seriously compromising the chemical stability of the SVI's active ingredient or the physical or microbiological stability of the SVI formulation in general. Thus, the properties stabilized in the SVI formulation usually cannot be expected to be carried over to the compounded or admixed preparation. Preparation-specific, experimentally determined stability data evaluation protocols are preferable to published stability information.

Compounding personnel who assign BUDs to CSPs when lacking direct chemical assay results must critically interpret and evaluate the most appropriate available information sources to determine a conservative and safe BUD. The SOP manual of the compounding facility and each specific CSP formula record shall describe the general basis used to assign the BUD and storage conditions.

When manufactured MDVs (see *Multiple-Dose Container* under *Preservation, Packaging, Storage,* and *Labeling* in the *General Notices and Requirements*) of sterile ingredients are used in CSPs, the stoppers of the MDVs are inspected for physical integrity and disinfected by wiping with a sterile 70% IPA swab before each penetration with a sterile withdrawal device. When contaminants or abnormal properties are suspected or observed in MDVs, such MDVs shall be discarded. The BUD after initially entering or opening (e.g., needle puncturing) multiple-dose containers is 28 days (see *Antimicrobial Effectiveness Testing ⟨51⟩*) unless otherwise specified by the manufacturer.

Proprietary Bag and Vial Systems

The sterility storage and stability beyond-use times for attached and activated (where activated is defined as allowing contact of the previously separate diluent and drug contents) container pairs of drug products for intravascular administration (e.g., ADD-Vantage®, Mini Bag Plus®) shall be applied as indicated by the manufacturer. In other words, follow manufacturers' instructions for handling and storing ADD-Vantage®, Mini Bag Plus®, Add A Vial®, Add-Ease® products, and any others.

Accessed from 167.78.4.19 by James Cumbie (ocean22) on Mon Sep 09 15:04:23 EDT 2013

Monitoring Controlled Storage Areas

To ensure that product potency is retained through the manufacturer's labeled expiration date, compounding personnel shall monitor the drug storage areas within the compounding facility. Controlled temperature areas in compounding facilities include controlled room temperature, 20° to 25° with mean kinetic temperature 25°; controlled cold temperature, 2° to 8° with mean kinetic temperature 8°; cold temperature, 2° to 8°; freezing temperature, –25° and –10° (see *General Notices and Requirements*) if needed to achieve freezing, and the media-specific temperature range for microbial culture media. A controlled temperature area shall be monitored at least once daily and the results documented on a temperature log. Additionally, compounding personnel shall note the storage temperature when placing the product into or removing the product from the storage unit in order to monitor any temperature aberrations. Suitable temperature recording devices may include a calibrated continuous recording device or a National Institute of Standards and Technology (NIST) calibrated thermometer that has adequate accuracy and sensitivity for the intended purpose, and it shall be properly calibrated at suitable intervals. If the compounding facility uses a continuous temperature recording device, compounding personnel shall verify at least once daily that the recording device itself is functioning properly.

The temperature-sensing mechanisms shall be suitably placed in the controlled temperature storage space to reflect accurately its true temperature. In addition, the compounding facility shall adhere to appropriate procedures of all controlled storage spaces to ensure that such spaces are not subject to significantly prolonged temperature fluctuations as may occur, for example, by leaving a refrigerator door open too long.

MAINTAINING STERILITY, PURITY, AND STABILITY OF DISPENSED AND DISTRIBUTED CSPs

This section summarizes the responsibilities of compounding facilities for maintaining quality and control of CSPs that are dispensed and administered within their parent healthcare organizations.

Compounding personnel shall ensure proper storage and security of CSPs prepared by or dispensed from the compounding facility until either their BUDs are reached or they are administered to patients. In fulfilling this general responsibility, the compounding facility is responsible for the proper packaging, handling, transport, and storage of CSPs prepared by or dispensed from it, including the appropriate education, training, and supervision of compounding personnel assigned to these functions. The compounding facility should assist in the education and training of noncompounding personnel responsible for carrying out any aspect of these functions.

Establishing, maintaining, and ensuring compliance with comprehensive written policies and procedures encompassing these responsibilities is a further responsibility of the compounding facility. Where noncompounding personnel are assigned tasks involving any of these responsibilities, the policies and procedures encompassing those tasks should be developed by compounding supervisors. The quality and control activities related to distribution of CSPs are summarized in the following five subsections. Activities or concerns that should be addressed as the compounding facility fulfills these responsibilities are as follows.

Packaging, Handling, and Transport

Inappropriate processes or techniques involved with packaging, handling, and transport can adversely affect quality and package integrity of CSPs. Although compounding personnel routinely perform many of the tasks associated with these functions, some tasks, such as transport, handling, and placement into storage, may be fulfilled by noncompounding personnel who are not under the direct administrative control of the compounding facility. Under these circumstances, appropriate SOPs shall be established by the compounding facility with the involvement of other departments or services whose personnel are responsible for carrying out those CSP-related functions for which the compounding facility has a direct interest. The performance of the noncompounding personnel is monitored for compliance to established policies and procedures.

The critical requirements that are unique to CSPs and that are necessary to ensure CSP quality and packaging integrity shall be addressed in SOPs. For example, techniques should be specified to prevent the depression of syringe plungers or dislodging of syringe tips during handling and transport. Additionally, disconnection of system components (e.g., where CSPs are dispensed with administration sets attached to them) shall be prevented through the BUD of the CSP. Foam padding or inserts are particularly useful where CSPs are transported by pneumatic tube systems. Regardless of the methods used, the compounding facility must evaluate their effectiveness and the reliability of the intended protection. Evaluation should be continuous—for example, through a surveillance system, including a system of problem reporting to the compounding facility.

Inappropriate transport and handling can adversely affect the quality of certain CSPs having unique stability concerns. For example, the physical shaking that might occur during pneumatic tube transport or undue exposure to heat or light must be addressed on a preparation-specific basis. Alternative transport modes or special packaging measures might be needed for the proper assurance of quality of these CSPs. The use of tamper-evident closures and seals on CSP ports can add an additional measure of security to ensure product integrity regardless of the transport method used.

Chemotoxic and other hazardous CSPs require safeguards to maintain the integrity of the CSP and to minimize the exposure potential of these products to the environment and to personnel who may come in contact with them. Transportation by pneumatic tube should be discouraged because of potential breakage and contamination. Special requirements associated with the packaging, transport, and handling of these agents include the prevention of accidental exposures or spills and the training of personnel in the event of an exposure or spill. Examples of special requirements of these agents also include exposure-reducing strategies such as the use of Luer lock syringes and connections, syringe caps, the capping of container ports, sealed plastic bags, impact-resistant containers, and cautionary labeling.

Copyright (c) 2013 The United States Pharmacopeial Convention. All rights reserved.

Use and Storage

The compounding facility is responsible for ensuring that CSPs in the patient-care setting maintain their quality until administered. The immediate labeling of the CSP container will display prominently and understandably the requirements for proper storage and expiration dating. Delivery and patient-care-setting personnel shall be properly trained to deliver the CSP to the appropriate storage location. Outdated and unused CSPs shall be returned to the compounding facility for disposition.

SOPs must exist to ensure that storage conditions in the patient-care setting are suitable for the CSP-specific storage requirements. Procedures include daily monitoring and documentation of drug storage refrigerators to ensure temperatures between 2° and 8° and the monthly inspection of all drug storage locations by compounding personnel. Inspections shall confirm compliance with appropriate storage conditions, separation of drugs and food, proper use of MDVs, and the avoidance of using single-dose products as MDVs. CSPs, as well as all other drug products, shall be stored in the patient-care area in such a way as to secure them from unauthorized personnel, visitors, and patients.

Readying for Administration

Procedures essential for generally ensuring quality, especially sterility assurance, when readying a CSP for its subsequent administration include proper hand washing, aseptic technique, site care, and change of administration sets. Additional procedures may also be essential for certain CSPs, devices, or techniques. Examples where such special procedures are needed include in-line filtration, the operation of automated infusion control devices, and the replenishment of CSPs into the reservoirs of implantable or portable infusion pumps. When CSPs are likely to be exposed to warmer than 30° for more than 1 hour during their administration to patients, the maintenance of their sterility and stability should be confirmed from either relevant and reliable sources or direct testing.

Redispensed CSPs

The compounding facility shall have the sole authority to determine when unopened, returned CSPs may be redispensed. Returned CSPs may be redispensed only when personnel responsible for sterile compounding can ensure that such CSPs are sterile, pure, and stable (contain labeled strength of ingredients). The following may provide such assurance: the CSPs were maintained under continuous refrigeration and protected from light, if required, and no evidence of tampering or any readying for use outside the compounding facility exists. Assignment of new storage times and BUDs that exceed the original dates for returned CSPs is permitted only when there is supporting evidence from sterility testing and quantitative assay of ingredients. Thus, initial preparation and thaw times should be documented and reliable measures should have been taken to prevent and detect tampering. Compliance with all procedures associated with maintaining product quality is essential. The CSPs shall not be redispensed if there is not adequate assurance that preparation quality and packaging integrity (including the connections of devices, where applicable) were continuously maintained between the time the CSPs left and the time they were returned. Additionally, CSPs shall not be redispensed if redispensing cannot be supported by the originally assigned BUD.

Education and Training

The assurance of CSPs' quality and packaging integrity is highly dependent on the proper adherence of all personnel to the pertinent SOPs. Compounding personnel shall design, implement, and maintain a formal education, training, and competency assessment program that encompasses all the functions and tasks addressed in the foregoing sections and all personnel to whom such functions and tasks are assigned. This program includes the assessment and documentation of procedural breaches, administration mishaps, side effects, allergic reactions, and complications associated with dosage or administration, such as extravasation. This program should be coordinated with the institution's adverse-events and incident reporting programs.

Packing and Transporting CSPs

The following sections describe how to maintain sterility and stability of CSPs until they are delivered to patient care locations for administration.

PACKING CSPs FOR TRANSIT

When CSPs are distributed to locations outside the premises in which they are compounded, compounding personnel select packing containers and materials that are expected to maintain physical integrity, sterility, and stability of CSPs during transit. Packing is selected that simultaneously protects CSPs from damage, leakage, contamination, and degradation, and protects personnel who transport packed CSPs from harm. The SOP manual of the compounding facility specifically describes appropriate packing containers and insulating and stuffing materials, based on information from product specifications, vendors, and experience of compounding personnel. Written instructions that clearly explain how to safely open containers of packed CSPs are provided to patients and other recipients.

Accessed from 167.78.4.19 by James Cumbie (ocean22) on Mon Sep 09 15:04:23 EDT 2013

TRANSIT OF CSPs

Compounding facilities that ship CSPs to locations outside their own premises shall select modes of transport that are expected to deliver properly packed CSPs in undamaged, sterile, and stable condition to recipients.

Compounding personnel should ascertain that temperatures of CSPs during transit by the selected mode will not exceed the warmest temperature specified on the storage temperature range on CSP labels. It is recommended that compounding personnel communicate directly with the couriers to learn shipping durations and exposure conditions that CSPs may encounter.

Compounding personnel shall include specific handling and exposure instructions on the exteriors of containers packed with CSPs to be transported and obtain reasonable assurance of compliance therewith from transporters. Compounding personnel shall periodically review the delivery performance of couriers to ascertain that CSPs are being efficiently and properly transported.

Storage in Locations Outside Compounding Facilities

Compounding facilities that ship CSPs to patients and other recipients outside their own premises shall ascertain or provide, whichever is appropriate, the following assurances:

1. Labels and accessory labeling for CSPs include clearly readable BUDs, storage instructions, and disposal instructions for out-of-date units.
2. Each patient or other recipient is able to store the CSPs properly, including the use of a properly functioning refrigerator and freezer if CSPs are labeled for such storage.

PATIENT OR CAREGIVER TRAINING

A formal training program is provided as a means to ensure understanding and compliance with the many special and complex responsibilities placed on the patient or caregiver for the storage, handling, and administration of CSPs. The instructional objectives for the training program include all home care responsibilities expected of the patient or caregiver and is specified in terms of patient or caregiver competencies.

Upon the conclusion of the training program, the patient or caregiver should, correctly and consistently, be able to do the following:

1. Describe the therapy involved, including the disease or condition for which the CSPs are prescribed, goals of therapy, expected therapeutic outcome, and potential side effects of the CSPs.
2. Inspect all drug products, CSPs, devices, equipment, and supplies on receipt to ensure that proper temperatures were maintained during transport and that goods received show no evidence of deterioration or defects.
3. Handle, store, and monitor all drug products, CSPs, and related supplies and equipment in the home, including all special requirements related to same.
4. Visually inspect all drug products, CSPs, devices, and other items the patient or caregiver is required to use immediately prior to administration in a manner to ensure that all items are acceptable for use. For example, CSPs must be free from leakage, container cracks, particulates, precipitate, haziness, discoloration, or other deviations from the normal expected appearance, and the immediate packages of sterile devices must be completely sealed, with no evidence of loss of package integrity.
5. Check labels immediately prior to administration to ensure the right drug, dose, patient, and time of administration.
6. Clean the in-home preparation area, scrub hands, use proper aseptic technique, and manipulate all containers, equipment, apparatus, devices, and supplies used in conjunction with administration.
7. Employ all techniques and precautions associated with CSP administration; for example, preparing supplies and equipment, handling of devices, priming the tubing, and discontinuing an infusion.
8. Care for catheters, change dressings, and maintain site patency as indicated.
9. Monitor for and detect occurrences of therapeutic complications such as infection, phlebitis, electrolyte imbalance, and catheter misplacement.
10. Respond immediately to emergency or critical situations such as catheter breakage or displacement, tubing disconnection, clot formation, flow blockage, and equipment malfunction.
11. Know when to seek and how to obtain professional emergency services or professional advice.
12. Handle, contain, and dispose of wastes, such as needles, syringes, devices, biohazardous spills or residuals, and infectious substances.

Training programs include a hands-on demonstration and practice with actual items that the patient or caregiver is expected to use, such as CSP containers, devices, and equipment. The patient or caregiver practices aseptic and injection technique under the direct observation of a health professional.

The compounding facility, in conjunction with nursing or medical personnel, is responsible for ensuring initially and on an ongoing basis that the patient or caregiver understands, has mastered, and is capable of and willing to comply with all of these home care responsibilities. This is achieved through a formal, written assessment program. All specified competencies in the patient or caregiver training program are formally assessed. The patient or caregiver is expected to demonstrate to appropriate healthcare personnel mastery of assigned activities before being allowed to administer CSPs unsupervised by a health professional.

Printed material such as checklists or instructions provided during training may serve as continuing post-training reinforcement of learning or as reminders of specific patient or caregiver responsibilities. Post-training verbal counseling can also be used periodically, as appropriate, to reinforce training and to ensure continuing correct and complete fulfillment of responsibilities.

Copyright (c) 2013 The United States Pharmacopeial Convention. All rights reserved.

PATIENT MONITORING AND ADVERSE EVENTS REPORTING

Compounding facilities shall clinically monitor patients treated with CSPs according to the regulations and guidelines of their respective state healthcare practitioner licensure boards or of accepted standards of practice. Compounding facilities shall provide patients and other recipients of CSPs with a way to address their questions and report any concerns that they may have with CSPs and their administration devices.

The SOP manuals of compounding facilities shall describe specific instructions for receiving, acknowledging, and dating receipts, and for recording, or filing, and evaluating reports of adverse events and of the quality of preparation claimed to be associated with CSPs. Reports of adverse events with CSPs shall be reviewed promptly and thoroughly by compounding supervisors to correct and prevent future occurrences. Compounding personnel are encouraged to participate in adverse event reporting and product defects programs of the FDA and USP.

QUALITY ASSURANCE (QA) PROGRAM

A provider of CSPs shall have in place a formal QA program intended to provide a mechanism for monitoring, evaluating, correcting, and improving the activities and processes described in this chapter. Emphasis in the QA program is placed on maintaining and improving the quality of systems and the provision of patient care. In addition, the QA program ensures that any plan aimed at correcting identified problems also includes appropriate follow-up to make certain that effective corrective actions were performed.[13]

Characteristics of a QA program include the following:

1. Formalization in writing;
2. Consideration of all aspects of the preparations and dispensing of products as described in this chapter, including environmental testing and verification results;
3. Description of specific monitoring and evaluation activities;
4. Specification of how results are to be reported and evaluated;
5. Identification of appropriate follow-up mechanisms when action limits or thresholds are exceeded; and
6. Delineation of the individuals responsible for each aspect of the QA program.

In developing a specific plan, focus is on establishing objective, measurable indicators for monitoring activities and processes that are deemed high risk, high volume, or problem prone. In general, the selection of indicators and the effectiveness of the overall QA program is reassessed on an annual basis.

ABBREVIATIONS AND ACRONYMS

ACD	automated compounding device
ACPH	air changes per hour
ALARA	as low as reasonably achievable
ASHRAE	American Society of Heating, Refrigerating and Air-Conditioning Engineers
BI	biological indicator
BSC	biological safety cabinet
BUD	beyond-use date
CACI	compounding aseptic containment isolator
CAI	compounding aseptic isolator
CDC	Centers for Disease Control and Prevention
CETA	Controlled Environment Testing Association
cfu	colony-forming unit(s)
CSP	compounded sterile preparation
CSTD	closed-system vial-transfer device
DCA	direct compounding area
ECV	endotoxin challenge vial
EU	Endotoxin Unit
FDA	Food and Drug Administration
HEPA	high efficiency particulate air
HICPAC	Healthcare Infection Control Practices Advisory Committee
HVAC	heating, ventilation, and air conditioning
IPA	isopropyl alcohol
ISO	International Organization for Standardization
LAFW	laminar airflow workbench
MDVs	multiple-dose vials
MMWR	Morbidity and Mortality Weekly Report
NIOSH	National Institute for Occupational Safety and Health

[13] The use of additional resources, such as the Accreditation Manual for Home Care from the Joint Commission on Accreditation of Healthcare Organizations, may prove helpful in the development of a QA plan.

Accessed from 167.78.4.19 by James Cumbie (ocean22) on Mon Sep 09 15:04:23 EDT 2013

NIST	National Institute of Standards and Technology
PEC	primary engineering control
PET	positron emission tomography
PPE	personnel protective equipment
psi	pounds per square inch
QA	quality assurance
SOP	standard operating procedure
SVI	sterile vial for injection
TSA	trypticase soy agar
USP	United States Pharmacopeia

APPENDICES

Appendix I. Principal Competencies, Conditions, Practices, and Quality Assurances That Are Required († "shall") and Recommended (‡ "should") in USP Chapter ⟨797⟩

NOTE—This tabular appendix selectively abstracts and condenses the full text of ⟨797⟩ for rapid reference only. Compounding personnel are responsible for reading, understanding and complying with the full text and all official USP terminology, content, and conditions therein.

INTRODUCTION

‡ Chapter purpose is to prevent harm and death to patients treated with CSPs.

† Chapter pertains to preparation, storage, and transportation, but not administration, of CSPs.

† Personnel and facilities to which ⟨797⟩ applies; therefore, for whom and which it may be enforced by regulatory and accreditation authorities.

† Types of preparations designated to be CSPs according to their physical forms, and their sites and routes of administration to patients.

† Compounding personnel must be meticulously conscientious to preclude contact contamination of CSPs both within and outside ISO Class 5 areas.

ORGANIZATION

† All compounding personnel shall be responsible for understanding fundamental practices and precautions within USP ⟨797⟩, for developing and implementing appropriate procedures, and for continually evaluating these procedures and the quality of final CSPs to prevent harm.

DEFINITIONS

† Twenty-eight terms are defined and integral to complying with USP ⟨797⟩.

RESPONSIBILITY OF COMPOUNDING PERSONNEL

† Practices and quality assurances required to prepare, store, and transport CSPs that are sterile, and acceptably accurate, pure, and stable.

CSP MICROBIAL CONTAMINATION RISK LEVELS

† Proper training and evaluation of personnel, proper cleansing and garbing of personnel, proper cleaning and disinfecting of compounding work environments, and proper maintenance and monitoring of controlled environmental locations (all of which are detailed in their respective sections).

Low-Risk Level CSPs

† Aseptic manipulations within an ISO Class 5 environment using three or fewer sterile products and entries into any container.

† In absence of passing sterility test, store not more than 48 hours at controlled room temperature, 14 days at cold temperature, and 45 days in solid frozen state at –25° to –10° or colder.

† Media-fill test at least annually by compounding personnel.

Low-Risk Level CSPs with 12-Hour or Less BUD

† Fully comply with all four specific criteria.

‡ Sinks should not be located adjacent to the ISO Class 5 primary engineering control.

‡ Sinks should be separated from the immediate area of the ISO Class 5 primary engineering control device.

Medium-Risk Level CSPs

† Aseptic manipulations within an ISO Class 5 environment using prolonged and complex mixing and transfer, more than three sterile products and entries into any container, and pooling ingredients from multiple sterile products to prepare multiple CSPs.

† In absence of passing sterility test, store not more than 30 hours at controlled room temperature, 9 days at cold temperature, and 45 days in solid frozen state at –25° to –10° or colder.

†Media-fill test at least annually by compounding personnel.

High-Risk Level CSPs

† Confirmed presence of nonsterile ingredients and devices, or confirmed or suspected exposure of sterile ingredients for more than one hour to air quality inferior to ISO Class 5 before final sterilization.

† Sterilization method verified to achieve sterility for the quantity and type of containers.

† Meet allowable limits for bacterial endotoxins.

† Maintain acceptable strength and purity of ingredients and integrity of containers after sterilization.

Copyright (c) 2013 The United States Pharmacopeial Convention. All rights reserved.

APPENDICES

Appendix I. Principal Competencies, Conditions, Practices, and Quality Assurances That Are Required († "shall") and Recommended (‡ "should") in USP Chapter ⟨797⟩ *(Continued)*

† In absence of passing sterility test, store not more than 24 hours at controlled room temperature, 3 days at cold temperature, and 45 days in solid frozen state at −25° to −10° or colder.

† Media-fill test at least semiannually by compounding personnel.

PERSONNEL TRAINING AND EVALUATION IN ASEPTIC MANIPULATIONS SKILLS

† Pass didactic, practical skill assessment and media-fill testing initially, followed by an annual assessment for a low- and medium-risk level compounding and semi-annual assessment for high-risk level compounding.

† Compounding personnel who fail written tests, or whose media-fill test vials result in gross microbial colonization, shall be immediately reinstructed and re-evaluated by expert compounding personnel to ensure correction of all aseptic practice deficiencies.

IMMEDIATE-USE CSPs

† Fully comply with all six specified criteria.

SINGLE-DOSE AND MULTIPLE-DOSE CONTAINERS

† Beyond-use date 28 days, unless specified otherwise by the manufacturer, for closure sealed multiple-dose containers after initial opening or entry.

† Beyond-use time of 6 hours, unless specified otherwise by the manufacturer, for closure sealed single-dose containers in ISO Class 5 or cleaner air after initial opening or entry.

† Beyond-use time of 1 hour for closure sealed single-dose containers after being opened or entered in worse than ISO Class 5 air.

† Storage of opened single-dose ampuls is not permitted.

HAZARDOUS DRUGS AS CSPs

† Appropriate personnel protective equipment.

† Appropriate primary engineering controls (BSCs and CACIs) are used for concurrent personnel protection and exposure of critical sites.

† Hazardous drugs shall be stored separately from other inventory in a manner to prevent contamination and personnel exposure.

† At least 0.01 inch water column negative pressure and 12 air changes per hour in non-cleanrooms in which CACIs are located.

† Hazardous drugs shall be handled with caution at all times using appropriate chemotherapy gloves during receiving, distribution, stocking, inventorying, preparing for administration, and disposal.

† Hazardous drugs shall be prepared in an ISO Class 5 environment with protective engineering controls in place, and following aseptic practices specified for the appropriate contamination risk levels.

† Access to drug preparation areas shall be limited to authorized personnel.

† A pressure indicator shall be installed that can readily monitor room pressurization, which is documented daily.

† Annual documentation of full training of personnel regarding storage, handling, and disposal of hazardous drugs.

† When used, a CSTD shall be used in an ISO Class 5 primary engineering control device.

† At least 0.01 inch water column negative pressure is required for compounding of hazardous drugs.

‡ Negative-pressure buffer area is not required for low-volume compounding operations when CSTD is used in BSC or CACI.

† Compounding personnel of reproductive capability shall confirm in writing that they understand the risks of handling hazardous drugs.

† Disposal of all hazardous drug wastes shall comply with all applicable federal and state regulations.

‡ Total external exhaust of primary engineering controls.

‡ Assay of surface wipe samples every 6 months.

RADIOPHARMACEUTICALS AS CSPs

† Positron Emission Tomography is according to USP chapter ⟨823⟩.

† Appropriate primary engineering controls and radioactivity containment and shielding.

† Radiopharmaceuticals compounded from sterile components, in closed sterile containers, with volume of 100 mL or less for a single-dose injection or not more than 30 mL taken from a multiple-dose container shall be designated as and conform to the standards for low-risk level CSPs.

† Radiopharmaceutical vials, designed for multi-use, compounded with technetium-99m, exposed to ISO Class 5 environment and punctured by needles with no direct contact contamination may be used up to the time indicated by manufacturers' recommendations.

† Location of primary engineering controls permitted in ISO Class 8 controlled environment.

† Technetium-99m/Molybdenum-99 generators used according to manufacturer, state, and federal requirements.

† Radiopharmaceuticals prepared as low-risk level CSPs with 12-hour or less BUD shall be prepared in a segregated compounding area.

† Materials and garb exposed in patient-care and treatment area shall not cross a line of demarcation into the segregated compounding area.

† Technetium-99m/Molybdenum-99 generators must be eluted in ISO Class 8 conditions.

† Segregated compounding area will be designated with a line of demarcation.

‡ Storage and transport of properly shielded vials of radiopharmaceutical CSPs may occur in a limited access ambient environment without a specific ISO class designation.

ALLERGEN EXTRACTS AS CSPs

† Allergen extracts as CSPs are not subject to the personnel, environmental, and storage requirements for all CSP Microbial Contamination Risk Levels when certain criteria are met.

Accessed from 167.78.4.19 by James Cumbie (ocean22) on Mon Sep 09 15:04:23 EDT 2013

APPENDICES

Appendix I. Principal Competencies, Conditions, Practices, and Quality Assurances That Are Required († "shall") and Recommended (‡ "should") in USP Chapter ⟨797⟩ *(Continued)*

VERIFICATION OF COMPOUNDING ACCURACY AND STERILITY

† Review labels and document correct measurements, aseptic manipulations, and sterilization procedures to confirm correct identity, purity, and strength of ingredients in, and sterility of, CSPs.

‡ Assay finished CSPs to confirm correct identity and, or, strength of ingredients.

‡ Sterility test finished CSPs.

Sterilization Methods

† Verify that methods achieve sterility while maintaining appropriate strength, purity, quality, and packaging integrity.

‡ Prove effectiveness by USP chapter ⟨71⟩, equivalent, or superior sterility testing.

Sterilization of High-Risk Level CSPs by Filtration

† Nominal 0.2-µm pore size sterile membranes that are chemically and physically compatible with the CSP.

† Complete rapidly without filter replacement.

† Subject filter to manufacturer's recommended integrity test (e.g., bubble point test) after filtering CSPs.

Sterilization of High-Risk Level CSPs by Steam

† Test to verify the mass of containers to be sterilized will be sterile after the selected exposure duration in the particular autoclave.

† Ensure live steam contacts all ingredients and surfaces to be sterilized.

† Pass solutions through a 1.2-µm or smaller nominal pore size filter into final containers to remove particulates before sterilization.

† Heated filtered air shall be evenly distributed throughout the chamber by a blower device.

† Dry heat shall only be used for those materials that cannot be sterilized by steam, when the moisture would either damage or be impermeable to the materials.

† Sufficient space shall be left between materials to allow for good circulation of the hot air.

† The description of dry heat sterilization conditions and duration for specific CSPs shall be included in written documentation in the compounding facility. The effectiveness of dry heat sterilization shall be verified using appropriate biological indicators and other confirmation.

‡ The oven should be equipped with a system for controlling temperature and exposure period.

Depyrogenation by Dry Heat

† Dry heat depyrogenation shall be used to render glassware or containers, such as vials free from pyrogens as well as viable microbes.

† The description of the dry heat depyrogenation cycle and duration for specific load items shall be included in written documentation in the compounding facility.

† The effectiveness of the dry heat depyrogenation cycle shall be verified using endotoxin challenge vials (ECVs).

‡ The bacterial endotoxin test should be performed on the ECVs to verify the cycle is capable of achieving a 3 log reduction in endotoxin.

ENVIRONMENTAL QUALITY AND CONTROL

Exposure of Critical Sites

† ISO Class 5 or better air.

† Preclude direct contact (e.g., touch and secretions) contamination.

ISO Class 5 Air Sources, Buffer Areas, and Ante-Areas

† A buffer area is an area that provides at least ISO Class 7 air quality.

† New representations of facility layouts.

† Each compounding facility shall ensure that each source of ISO Class 5 environment for exposure of critical sites and sterilization by filtration is properly located, operated, maintained, monitored, and verified.

† Devices (e.g., computers and printers) and objects (e.g., carts and cabinets) can be placed in buffer areas and shall be verified by testing or monitoring.

Viable and Nonviable Environmental Sampling (ES) Testing

† Environmental sampling shall occur as part a comprehensive quality management program and shall occur minimally when several conditions exist.

‡ The ES program should provide information to staff and leadership to demonstrate that the engineering controls are maintaining an environment within the compounding area that consistently maintains acceptably low viable and nonviable particle levels.

Environmental Nonviable Particle Testing Program

† Certification and testing of primary (LAFWs, BSCs, CAIs and CACIs) and secondary engineering controls (buffer and ante areas) shall be performed by a qualified individual no less than every six months and whenever the device or room is relocated, altered, or major service to the facility is performed. Certification procedures such as those outlined in the CETA Certification Guide for Sterile Compounding Facilities (CAG-003-2006) shall be used.

Total Particle Counts

† Certification that each ISO classified area (e.g., ISO Class 5, 7 and 8) is within established guidelines shall be performed no less than every 6 months and whenever the LAFW, BSC, CAI, or CACI is relocated or the physical structure of the buffer room or ante-area has been altered.

† Testing shall be performed by qualified operators using current, state-of-the-art electronic equipment with results meeting ISO Class 5, 7, or 8 depending on the requirements of the area.

† All certification records shall be maintained and reviewed by supervising personnel or other designated employee to ensure that the controlled environments comply with the proper air cleanliness, room pressures, and air changes per hour.

Pressure Differential Monitoring

† A pressure gauge or velocity meter shall be installed to monitor the pressure differential or airflow between the buffer area and ante-area, and the ante-area and the general environment outside the compounding area.

† The results shall be reviewed and documented on a log at least every work shift (minimum frequency shall be at least daily) or by a continuous recording device.

Copyright (c) 2013 The United States Pharmacopeial Convention. All rights reserved.

APPENDICES

Appendix I. Principal Competencies, Conditions, Practices, and Quality Assurances That Are Required († "shall") and Recommended (‡ "should") in USP Chapter ⟨797⟩ *(Continued)*

† The pressure between the ISO Class 7 and general pharmacy area shall not be less than 5 Pa (0.02 inch water column (w.c.)).

† In facilities where low- and medium-risk level CSPs are prepared, differential airflow shall maintain a minimum velocity of 0.2 meter/second (40 fpm) between buffer area and ante-area.

Environmental Viable Airborne Particle Testing Program—Sampling Plan

† An appropriate environmental sampling plan shall be developed for airborne viable particles based on a risk assessment of compounding activities performed.

† Selected sampling sites shall include locations within each ISO Class 5 environment and in the ISO Class 7 and 8 areas, and the segregated compounding areas at greatest risk of contamination (e.g., work areas near the ISO Class 5 environment, counters near doors, pass-through boxes).

† The plan shall include sample location, method of collection, frequency of sampling, volume of air sampled, and time of day as related to activity in the compounding area and action levels.

‡ It is recommended that compounding personnel refer to USP Chapter *Microbiological Control and Monitoring of Aseptic Processing Environments* ⟨1116⟩ and the CDC Guidelines for Environmental Infection Control in Healthcare Facilities-2003 for more information.

Growth Media

† A general microbiological growth medium such as Soybean–Casein Digest Medium (also known as trypticase soy broth (TSB) or agar (TSA)) shall be used to support the growth of bacteria.

† Malt extract agar (MEA) or some other media that supports the growth of fungi shall be used in high-risk level compounding environments.

† Media used for surface sampling shall be supplemented with additives to neutralize the effects of disinfecting agents (e.g., TSA with lecithin and polysorbate 80).

Viable Air Sampling

† Evaluation of airborne microorganisms using volumetric collection methods in the controlled air environments shall be performed by properly trained individuals for all compounding risk levels.

† Impaction shall be the preferred method of volumetric air sampling.

† For low-, medium-, and high-risk level compounding, air sampling shall be performed at locations that are prone to contamination during compounding activities and during other activities like staging, labeling, gowning, and cleaning.

† Locations shall include zones of air backwash turbulence within laminar airflow workbench and other areas where air backwash turbulence may enter the compounding area.

† For low-risk level CSPs with 12-hour or less BUD, air sampling shall be performed at locations inside the ISO Class 5 environment and other areas that are in close proximity to the ISO class 5 environment, during the certification of the primary engineering control.

‡ Consideration should be given to the overall effect the chosen sampling method will have on the unidirectional airflow within a compounding environment.

Air Sampling Devices

† The instructions in the manufacturer's user manual for verification and use of electric air samplers that actively collect volumes of air for evaluation shall be followed.

† A sufficient volume of air (400–1000 liters) shall be tested at each location in order to maximize sensitivity.

‡ It is recommended that compounding personnel also refer to USP Chapter ⟨1116⟩, which can provide more information on the use of volumetric air samplers and volume of air that should be sampled to detect environmental bioburden excursions.

Air Sampling Frequency and Process

† Air sampling shall be performed at least semiannually (i.e. every 6 months), as part of the re-certification of facilities and equipment for area where primary engineering controls are located.

† A sufficient volume of air shall be sampled and the manufacturer's guidelines for use of the electronic air sampling equipment followed.

‡ Any facility construction or equipment servicing may require the need to perform air sampling during these events.

Incubation Period

† The microbial growth media plates used to collect environmental sampling are recovered, covers secured (e.g., taped), inverted, and incubated at a temperature and for a time period conducive to multiplication of microorganisms.

† The number of discrete colonies of microorganisms shall be counted and reported as colony-forming units (cfu) and documented on an environmental monitoring form. Counts from air monitoring need to be transformed into cfu/cubic meter of air and evaluated for adverse trends.

‡ TSA should be incubated at 35° ± 2 ° for 2–3 days.

‡ MEA or other suitable fungal media should be incubated at 28° ± 2 ° for 5–7 days.

Action Levels, Documentation and Data Evaluation

† Sampling data shall be collected and reviewed on a periodic basis as a means of evaluating the overall control of the compounding environment.

† Competent microbiology personnel shall be consulted if an environmental sampling consistently shows elevated levels of microbial growth.

† An investigation into the source of the environmental contamination shall be conducted.

‡ Any cfu count that exceeds its respective action level should prompt a re-evaluation of the adequacy of personnel work practices, cleaning procedures, operational procedures, and air filtration efficiency within the aseptic compounding location.

‡ Table titled, Recommended Action Levels for Microbial Contamination should only be used as a guideline

Facility Design and Environmental Controls

† Compounding facilities are physically designed and environmentally controlled to minimize airborne contamination from contacting critical sites.

† Compounding facilities shall provide a comfortable and well-lighted working environment, which typically includes a temperature of 20° or cooler to maintain comfortable conditions for compounding personnel when attired in the required aseptic compounding garb.

† Primary engineering controls provide unidirectional (i.e., laminar) HEPA air at a velocity sufficient to prevent airborne particles from contacting critical sites.

† In situ air pattern analysis via smoke studies shall be conducted at the critical area to demonstrate unidirectional airflow and sweeping action over and away from the product under dynamic conditions.

Accessed from 167.78.4.19 by James Cumbie (ocean22) on Mon Sep 09 15:04:23 EDT 2013

APPENDICES

Appendix I. Principal Competencies, Conditions, Practices, and Quality Assurances That Are Required († "shall") and Recommended (‡ "should") in USP Chapter ⟨797⟩ *(Continued)*

† Policies and procedures for maintaining and working within the primary engineering control area shall be written and followed. The policies and procedures will be determined by the scope and risk levels of the aseptic compounding activities used during the preparation of the CSPs.

† The principles of HEPA-filtered unidirectional airflow in the work environment shall be understood and practiced in the compounding process in order to achieve the desired environmental conditions.

† Clean rooms for nonhazardous and nonradioactive CSPs are supplied with HEPA that enters from ceilings with return vents low on walls, and that provides not less than 30 air changes per hour.

† Buffer areas maintain 0.02- to 0.05-inch water column positive pressure, and do not contain sinks or drains.

† Air velocity from buffer rooms or zones to ante-areas is at least 40 feet/minute.

† The primary engineering controls shall be placed within a buffer area in such a manner as to avoid conditions that could adversely affect their operation.

† The primary engineering controls shall be placed out of the traffic flow and in a manner to avoid disruption from the HVAC system and room cross-drafts.

† HEPA-filtered supply air shall be introduced at the ceiling.

† All HEPA filters shall be efficiency tested using the most penetrating particle size and shall be leak tested at the factory and then leak tested again in situ after installation.

† Activities and tasks carried out within the buffer area shall be limited to only those necessary when working within a controlled environment.

† Only the furniture, equipment, supplies, and other material required for the compounding activities to be performed shall be brought into the room.

† Surfaces and essential furniture in buffer rooms or zones and clean rooms shall be nonporous, smooth, nonshedding, impermeable, cleanable, and resistant to disinfectants.

† The surfaces of ceilings, walls, floors, fixtures, shelving, counters, and cabinets in the buffer area shall be smooth, impervious, free from cracks and crevices, and nonshedding, thereby promoting cleanability, and minimizing spaces in which microorganisms and other contaminants may accumulate.

† The surfaces shall be resistant to damage by disinfectant agents.

† Junctures of ceilings to walls shall be coved or caulked to avoid cracks and crevices where dirt can accumulate.

† Ceiling tiles shall be caulked around each perimeter to seal them to the support frame.

† The exterior lens surface of ceiling lighting fixtures shall be smooth, mounted flush, and sealed.

† Any other penetrations through the ceiling or walls shall be sealed.

† The buffer area shall not contain sources of water (sinks) or floor drains. Work surfaces shall be constructed of smooth, impervious materials, such as stainless steel or molded plastic, so that they are easily cleaned and disinfected.

† Carts shall be of stainless steel wire, nonporous plastic, or sheet metal construction with good quality, cleanable casters to promote mobility.

† Storage shelving, counters, and cabinets shall be smooth, impervious, free from cracks and crevices, nonshedding, cleanable, and disinfectable.

† Their number, design, and manner of installation the itmes above shall promote effective cleaning and disinfection.

‡ If ceilings consist of inlaid panels, the panels should be impregnated with a polymer to render them impervious and hydrophobic.

‡ Dust-collecting overhangs, such as ceiling utility pipes, or ledges, such as windowsills, should be avoided.

‡ Air returns should be mounted low on the wall creating a general top-down dilution of room air with HEPA-filtered make-up air.

Placement of Primary Engineering Controls Within ISO Class 7 Buffer Areas

† Primary engineering controls for nonhazardous and nonradioactive CSPs are located in buffer areas, except for CAIs that are proven to maintain ISO Class 5 air when particle counts are sampled 6 to 12 inches upstream of critical site exposure areas during performance of normal inward and outward transfer of materials, and compounding manipulations when such CAIs are located in air quality worse than ISO Class 7.

† Presterilization procedures for high-risk level CSPs, such as weighing and mixing, shall be completed in no worse than an ISO Class 8 environment.

† Primary engineering controls shall be located out of traffic patterns and away from room air currents that could disrupt the intended airflow patterns.

† When isolators are used for sterile compounding, the recovery time to achieve ISO Class 5 air quality shall be documented and internal procedures developed to ensure that adequate recovery time is allowed after material transfer before and during compounding operations.

† When compounding activities require the manipulation of a patient's blood-derived or other biological material (e.g., radiolabeling a patient's or a donor's white blood cells), the manipulations shall be clearly separated from routine material-handling procedures and equipment used in CSP preparation activities, and they shall be controlled by specific standard operating procedures in order to avoid any cross-contamination.

† Food, drinks, and items exposed in patient care areas, and unpacking of bulk supplies and personnel cleansing and garbing are prohibited from buffer areas or rooms.

† Demarcation designation between buffer areas or rooms and ante-areas.

† Antiseptic hand cleansing and sterile gloves in buffer areas or rooms.

‡ Packaged compounding supplies and components, such as needles, syringes, tubing sets, and small- and large-volume parenterals, should be uncartoned and wiped down with a disinfectant that does not leave a residue (e.g., sterile 70% IPA) when possible in an ante-area, of ISO Class 8 air quality, before being passed into the buffer areas.

Cleaning and Disinfecting the Sterile Compounding Areas

† Trained personnel write detailed procedures including cleansers, disinfectants, and non-shedding wipe and mop materials.

† Cleaning and disinfecting surfaces in the LAFWs, BSCs, CAIs, and CACIs shall be cleaned and disinfected frequently, including at the beginning of each work shift, before each batch preparation is started, every 30 minutes during continuous compounding periods of individual CSPs, when there are spills, and when surface contamination is known or suspected from procedural breaches.

† Trained compounding personnel are responsible for developing, implementing, and practicing the procedures for cleaning and disinfecting the DCAs written in the SOPs.

Copyright (c) 2013 The United States Pharmacopeial Convention. All rights reserved.

APPENDICES

Appendix I. Principal Competencies, Conditions, Practices, and Quality Assurances That Are Required († "shall") and Recommended (‡ "should") in USP Chapter ⟨797⟩ *(Continued)*

† Cleaning and disinfecting shall occur before compounding is performed. Items shall be removed from all areas to be cleaned, and surfaces shall be cleaned by removing loose material and residue from spills, e.g., water-soluble solid residues are removed with Sterile Water (for Injection or Irrigation) and low-shedding wipes. This shall be followed by wiping with a residue-free disinfecting agent, such as sterile 70% IPA, which is allowed to dry before compounding begins.

† Work surfaces in ISO Class 7 and 8 areas and segregated compounding areas are cleaned at least daily.

† Dust and debris shall be removed when necessary from storage sites for compounding ingredients and supplies, using a method that does not degrade the ISO Class 7 or 8 air quality.

† Floors in ISO Class 7 and 8 areas are cleaned daily when no compounding occurs.

† IPA (70% isopropyl alcohol) remains on surfaces to be disinfected for at least 30 seconds before such surfaces are used to prepare CSPs.

† Emptied shelving, walls, and ceilings in ante-areas are cleaned and disinfected at least monthly.

† Mopping shall be performed by trained personnel using approved agents and procedures described in the written SOPs.

† Cleaning and disinfecting agents, their schedules of use and methods of application shall be in accordance with written SOPs and followed by custodial and/or compounding personnel.

† All cleaning materials, such as wipers, sponges, and mops, shall be nonshedding, preferably composed of synthetic micro fibers, and dedicated to use in the buffer area, or ante-area, and segregated compounding areas and shall not be removed from these areas except for disposal.

† If cleaning materials are reused (e.g., mops), procedures shall be developed (based on manufacturer recommendations) that ensure that the effectiveness of the cleaning device is maintained and repeated use does not add to the bioburden of the area being cleaned.

† Supplies and equipment removed from shipping cartons shall be wiped with a suitable disinfecting agent (e.g., sterile 70% IPA) delivered from a spray bottle or other suitable delivery method.

† After the disinfectant is sprayed or wiped on a surface to be disinfected, the disinfectant shall be allowed to dry, and during this time the item shall not be used for compounding purposes.

† Sterile 70% IPA wetted gauze pads or other particle-generating material shall not be used to disinfect the sterile entry points of packages and devices.

Personnel Cleansing and Garbing

† Personnel shall also be thoroughly competent and highly motivated to perform flawless aseptic manipulations with ingredients, devices, and components of CSPs.

† Personnel with rashes, sunburn, weeping sores, conjunctivitis, active respiratory infection, and cosmetics are prohibited from preparing CSPs.

† Compounding personnel shall remove personal outer garments; cosmetics; artificial nails; hand, wrist, and body jewelry that can interfere with the fit of gowns and gloves; and visible body piercing above the neck.

† Order of compounding garb and cleansing in ante-area: shoes or shoe covers, head and facial hair covers, face mask, fingernail cleansing, hand and forearm washing and drying; non-shedding gown.

† Order of cleansing and gloving in buffer room or area: hand cleansing with a persistently active alcohol-based product with persistent activity; allow hands to dry; don sterile gloves.

† Routinely disinfect gloves with sterile 70% IPA after contacting nonsterile objects.

† Inspect gloves for holes and replace when breaches are detected.

† Personnel repeat proper procedures after they are exposed to direct contact contamination or worse than ISO Class 8 air.

† These requirements are exempted only for immediate-use CSPs and CAIs for which manufacturers provide written documentation based on validated testing that such personnel practices are not required to maintain sterility in CSPs.

Personnel Training and Competency Evaluation of Garbing, Aseptic Work Practices and Cleaning/Disinfection Procedures

† Personnel who prepare CSPs shall be trained conscientiously and skillfully by expert personnel, multi-media instructional sources, and professional publications in the theoretical principles and practical skills of garbing procedures, aseptic work practices, achieving and maintaining ISO Class 5 environmental conditions, and cleaning and disinfection procedures.

† This training shall be completed and documented before any compounding personnel begin to prepare CSPs.

† Compounding personnel shall complete didactic training, pass written competence assessments, undergo skill assessment using observational audit tools, and media-fill testing.

† Media-fill testing of aseptic work skills shall be performed initially before beginning to prepare CSPs and at least annually thereafter for low- and medium-risk level compounding; and semiannually for high-risk level compounding.

† Compounding personnel who fail written tests, observational audits, or whose media-fill test vials have one or more units showing visible microbial contamination, shall be reinstructed and re-evaluated by expert compounding personnel to ensure correction of all aseptic work practice deficiencies.

† Compounding personnel shall pass all evaluations prior to resuming compounding of sterile preparations.

† Compounding personnel must demonstrate proficiency of proper hand hygiene, garbing, and consistent cleaning procedures in addition to didactic evaluation and aseptic media fill.

† Cleaning and disinfecting procedures performed by other support personnel shall be thoroughly trained in proper hand hygiene, and garbing, cleaning, and disinfection procedures by a qualified aseptic compounding expert.

† Support personnel shall routinely undergo performance evaluation of proper hand hygiene, garbing, and all applicable cleaning and disinfecting procedures conducted by a qualified aseptic compounding expert.

Competency Evaluation of Garbing and Aseptic Work Practices

† Compounding personnel shall be evaluated initially prior to beginning compounding CSPs and whenever an aseptic media fill is performed using a Sample Form for Assessing Hand Hygiene and Garbing Related Practices of Compounding Personnel and the personnel glove fingertip sampling procedures.

Accessed from 167.78.4.19 by James Cumbie (ocean22) on Mon Sep 09 15:04:23 EDT 2013

APPENDICES

Appendix I. Principal Competencies, Conditions, Practices, and Quality Assurances That Are Required († "shall") and Recommended (‡ "should") in USP Chapter ⟨797⟩ *(Continued)*

Aseptic Work Practice Assessment and Evaluation via Personnel Glove Fingertip Sampling

† Monitoring of compounding personnel glove fingertips shall be performed for all CSP risk level compounding.

† Glove fingertip sampling shall be used to evaluate the competency of personnel in performing hand hygiene and garbing procedures in addition to educating compounding personnel on proper work practices.

† All personnel shall demonstrate competency in proper hand hygiene and garbing procedures in addition to aseptic work practices.

† Sterile contact agar plates shall be used to sample the gloved fingertips of compounding personnel after garbing to assess garbing competency and after completing the media-fill preparation.

† Gloves shall not be disinfected with sterile 70% IPA immediately prior to sampling.

Garbing and Gloving Competency Evaluation

† Compounding personnel shall be visually observed during the process of performing hand hygiene and garbing procedures.

† The visual observation shall be documented on a Sample Form for Assessing Hand Hygiene and Garbing Related Practices of Compounding Personnel and maintained to provide a permanent record of and long-term assessment of personnel competency.

Gloved Fingertip Sampling

† Immediately after the compounder completes the hand hygiene and garbing procedure, the evaluator shall collect a gloved fingertip and thumb sample from both hands of the compounder onto appropriate agar plates by lightly pressing each finger tip into the agar.

† The plates shall be incubated for the appropriate incubation period and at the appropriate temperature.

† All employees shall successfully complete an initial competency evaluation and gloved fingertip/thumb sampling procedure (0 cfu) no less than three times before initially being allowed to compound CSPs for human use.

† After completing the initial gowning and gloving competency evaluation, re-evaluation of all compounding personnel shall occur at least annually for low- and medium-risk level CSPs and semiannually for high-risk level CSPs before being allowed to continue compounding CSPs.

† Gloves shall not be disinfected with sterile 70% IPA prior to testing.

† The sampled gloves shall be immediately discarded and proper hand hygiene performed after sampling. The nutrient agar plates shall be incubated as stated below.

† The cfu action level for gloved hands shall be based on the total number of cfu on both gloves and not per hand.

‡ Results should be reported separately as number of cfu per employee per hand (left hand, right hand).

Incubation Period

† At the end of the designated sampling period, the agar plates are recovered, covers secured, inverted and incubated at a temperature and for a time period conducive to multiplication of microorganisms. Trypticase soy agar (TSA) with lecithin and polysorbate 80 shall be incubated at 35°± 2° for 2–3 days.

Aseptic Manipulation Competency Evaluation

† All compounding personnel shall have their aseptic technique and related practice competency evaluated initially during the media-fill test procedure and subsequent annual or semiannual media-fill test procedures on the Sample Form for Assessing Aseptic Technique and Related Practices of Compounding Personnel.

Media-Fill Test Procedure

† The skill of personnel to aseptically prepare CSPs shall be evaluated using sterile fluid bacterial culture media-fill verification.

† Media-filled vials shall be incubated within a range of 35° ± 2° for 14 days.

Surface Cleaning and Disinfection Sampling and Assessment

† Surface sampling shall be performed in all ISO classified areas on a periodic basis and can be accomplished using contact plates and/or swabs and shall be done at the conclusion of compounding.

† Locations to be sampled shall be defined in a sample plan or on a form.

Cleaning and Disinfecting Competency Evaluation

† Compounding personnel and other personnel responsible for cleaning shall be visually observed during the process of performing cleaning and disinfecting procedures during initial personnel training on cleaning procedures, changes in cleaning staff and at the completion of any Media-Fill Test Procedure.

† Visual observation shall be documented on a Sample Form for Assessing Cleaning and Disinfection Procedures and maintained to provide a permanent record of, and long-term assessment of, personnel competency.

Surface Collection Methods

† Immediately after sampling a surface with the contact plate, the sampled area shall be thoroughly wiped with a non-shedding wipe soaked in sterile 70% IPA.

‡ Results should be reported as cfu per unit of surface area.

Action Levels, Documentation, and Data Evaluation

† Environmental sampling data shall be collected and reviewed on a routine basis as a means of evaluating the overall control of the compounding environment.

† If an activity consistently shows elevated levels of microbial growth, competent microbiology personnel shall be consulted.

† An investigation into the source of the contamination shall be conducted.

† When gloved fingertip sample results exceeds action levels after proper incubation, a review of hand hygiene and garbing procedures as well as glove and surface disinfection procedures and work practices shall be performed and documented.

‡ Any cfu count that exceeds its respective action level should prompt a re-evaluation of the adequacy of personnel work practices, cleaning procedures, operational procedures, and air filtration efficiency within the aseptic compounding location.

Copyright (c) 2013 The United States Pharmacopeial Convention. All rights reserved.

APPENDICES

Appendix I. Principal Competencies, Conditions, Practices, and Quality Assurances That Are Required († "shall") and Recommended (‡ "should") in USP Chapter ⟨797⟩ *(Continued)*

SUGGESTED STANDARD OPERATING PROCEDURES

† All facilities are required to have these, and they must include at least the items enumerated in this section.

FINISHED PREPARATION RELEASE CHECKS AND TESTS

Inspection of Solution Dosage Forms and Review of Compounding Procedures

† Review procedures and documents to ensure sterility, purity, correct identities and amounts of ingredients, and stability.

† Visually inspect for abnormal particulate matter and color, and intact containers and seals.

Sterility Testing

† High-risk level CSPs prepared in batches of more than 25 identical containers, or exposed longer than 12 hours at 2° to 8°, and 6 hours at warmer than 8° before being sterilized.

Bacterial Endotoxin (Pyrogen) Testing

† High-risk level CSPs, excluding those for inhalation and ophthalmic administration, prepared in batches of more than 25 identical containers, or exposed longer than 12 hours at 2° to 8°, and 6 hours at warmer than 8°, before being sterilized.

Identity and Strength Verification of Ingredients

† Written procedures to verify correct identity, quality, amounts, and purities of ingredients used in CSPs.

† Written procedures to ensure labels of CSPs contain correct names and amounts or concentrations of ingredients, total volumes, beyond-use dates, storage conditions, and route(s) of administration.

STORAGE AND BEYOND-USE DATING

Determining Beyond-Use Dates

† Use the general criteria in USP ⟨795⟩ in the absence of direct stability-indicating assays or authoritative literature that supports longer durations.

MAINTAINING STERILITY, PURITY, AND STABILITY OF DISPENSED AND DISTRIBUTED CSPs

† Written procedures for proper packaging, storage, and transportation conditions to maintain sterility, quality, purity, and strength of CSPs.

Redispensed CSPs

† When sterility, and acceptable purity, strength, and quality can be ensured.

† Assignment of sterility storage times and stability beyond-use dates that occur later than those of originally dispensed CSPs must be based on results of sterility testing and quantitative assay of ingredients.

Packaging and Transporting CSPs

† Packaging maintains physical integrity, sterility, stability, and purity of CSPs.

† Modes of transport that maintain appropriate temperatures and prevent damage to CSPs.

PATIENT OR CAREGIVER TRAINING

† Multiple component formal training program to ensure patients and caregivers understand the proper storage, handling, use, and disposal of CSPs.

PATIENT MONITORING AND ADVERSE EVENTS REPORTING

† Written standard procedures describe means for patients to ask questions and report concerns and adverse events with CSPs, and for compounding supervisors to correct and prevent future problems.

‡ Adverse events and defects with CSPs reported to FDA's MedWatch and USP's MEDMARX programs.

Accessed from 167.78.4.19 by James Cumbie (ocean22) on Mon Sep 09 15:04:23 EDT 2013

Appendix II. Common Disinfectants Used in Health Care for Inanimate Surfaces and Noncritical Devices, and Their Microbial Activity and Properties[1]

		Chemical Category of Disinfectant					
		Isopropyl alcohol	**Accelerated hydrogen peroxide**	**Quaternary Ammonium (e.g., dodecyl dimethyl ammonium chloride)**	**Phenolics**	**Chlorine (e.g., sodium hypochlorite)**	**Iodophors (e.g., povidone-iodine)**
Concentration Used		**60–95%**	**0.5%[3]**	**0.4–1.6% aq**	**0.4–1.6% aq**	**100–5000 ppm**	**30–50 ppm**
Microbial Inactivation[2]	Bacteria	+	+	+	+	+	+
	Lipophilic viruses	+	+	+	+	+	+
	Hydrophilic viruses	±	+	±	±	+	±
	M.tuberculosis	+	+	±	+	+	±
	Mycotic agents (fungi)	+	+	+	+	+	±
	Bacterial Spores	–	–	–	–	+	–
Important Chemical & Physical Properties	Shelf life >1 week	+	+	+	+	+	+
	Corrosive or deleterious effects	±	–	–	–	±	±
	Non-evaporable residue	–	–	+	+	–	+
	Inactivated by organic matter	+	±	+	±	+	+
	Skin irritant	±	–	+	+	+	±
	Eye irritant	+	–	+	+	+	+
	Respiratory irritant	–	–	–	–	+	–
	Systemic toxicity	+	–	+	+	+	+

Key to abbreviation and symbols: aq = diluted with water; ppm = parts per million; + = yes; – = no; ± = variable results.

[1] Modified from World Health Organization, Laboratory Bio Safety Manual 1983 and Rutala WA, "Antisepsis, disinfection and sterilization in the hospital and related institutions," *Manual of Clinical Microbiology,* American Society for Microbiology, Washington, DC, 1995, pages 227-245.

[2] Inactivation of the most common microorganisms (i.e., bacteria) occurs with a contact time of ≤1 minute; inactivation of spores requires longer contact times (e.g., 5-10 minutes for 5,000 ppm chlorine solution against *C. difficile spores). Reference: Perez J, Springthorpe VS, Sattar SA, "Activity of selected oxidizing microbicides against the spores of Clostridium difficile: Relevance to environmental control," American Journal of Infection Control, August 2005, pages 320-325.*

[3] *Accelerated* hydrogen peroxide is a new generation of hydrogen peroxide-based germicides in which the potency and performance of the active ingredient have been enhanced and accelerated through the use of appropriate acids and detergents.

Appendix III. Sample Form for Assessing Hand Hygiene and Garbing Related Practices of Compounding Personnel

Printed name and position/title of person assessed: _____

Name of facility or location: _____

Hand Hygiene and Garbing Practices: The qualified evaluator will check each space for which the person being assessed has acceptably completed the described activity, prints N/A if the activity is not applicable to the assessment session or N/O if the activity was not observed.*

_____ Presents in a clean appropriate attire and manner.

_____ Wears no cosmetics or jewelry (watches, rings, earrings, etc. piercing jewelry included) upon entry into ante-areas.

_____ Brings no food or drinks into or stored in the ante-areas or buffer areas.

_____ Is aware of the line of demarcation separating clean and dirty sides and observes required activities.

_____ Dons shoe covers or designated clean-area shoes one at a time, placing the covered or designated shoe on clean side of the line of demarcation, as appropriate.

_____ Dons beard cover if necessary.

_____ Dons head cover assuring that all hair is covered.

_____ Dons face mask to cover bridge of nose down to include chin.

_____ Performs hand hygiene procedure by wetting hands and forearms and washing using soap and warm water for at least 30 seconds.

_____ Dries hands and forearms using lint-free towel or hand dryer.

_____ Selects the appropriate sized gown examining for any holes, tears, or other defects.

_____ Dons gown and ensures full closure.

_____ Disinfects hands again using a waterless alcohol-based surgical hand scrub with persistent activity and allows hands to dry thoroughly before donning sterile gloves.

Copyright (c) 2013 The United States Pharmacopeial Convention. All rights reserved.

Appendix III. Sample Form for Assessing Hand Hygiene and Garbing Related Practices of Compounding Personnel *(Continued)*

_____ Dons appropriate sized sterile gloves ensuring that there is a tight fit with no excess glove material at the fingertips.
_____ Examines gloves ensuring that there are no defects, holes, or tears.
_____ While engaging in sterile compounding activities, routinely disinfects gloves with sterile 70% IPA prior to work in the direct compounding area (DCA) and after touching items or surfaces that may contaminate gloves.
_____ Removes PPE on the clean side of the ante-area.
_____ Removes gloves and performs hand hygiene.
_____ Removes gown and discards it, or hangs it on hook if it is to be reused within the same work day.
_____ Removes and discards mask, head cover, and beard cover (if used).
_____ Removes shoe covers or shoes one at a time, ensuring that uncovered foot is placed on the dirty side of the line of demarcation and performs hand hygiene again. (Removes and discards shoe covers every time the compounding area is exited).

***The person assessed is immediately informed of all unacceptable activities (i.e., spaces lacking check marks, N/A, or N/O) and shown and informed of specific corrections.**

Signature of Person Assessed	Printed Name	Date
Signature of Qualified Evaluator	Printed Name	Date

Appendix IV. Sample Form for Assessing Aseptic Technique and Related Practices of Compounding Personnel

Printed name and position/title of person assessed: _____
Name of facility or location: _____

Aseptic Technique, Safety, and Quality Assurance Practices: The qualified evaluator checks each space for which the person being assessed has acceptably completed the described activity, prints N/A if the activity is not applicable to the assessment session or N/O if the activity was not observed.*

_____ Completes the Hand Hygiene and Garbing Competency Assessment Form.
_____ Performs proper hand hygiene, garbing, and gloving procedures according to SOPs.
_____ Disinfects ISO Class 5 device surfaces with an appropriate agent.
_____ Disinfects components/vials with an appropriate agent prior to placing into ISO Class 5 work area.
_____ Introduces only essential materials in a proper arrangement in the ISO Class 5 work area.
_____ Does not interrupt, impede, or divert flow of first-air to critical sites.
_____ Ensures syringes, needles, and tubing remain in their individual packaging and are only opened in ISO Class 5 work area.
_____ Performs manipulations only in the appropriate DCA of the ISO Class 5 device.
_____ Does not expose critical sites to contact contamination or worse than ISO Class 5 air.
_____ Disinfects stoppers, injection ports, and ampul necks by wiping with sterile 70% IPA and allows sufficient time to dry.
_____ Affixes needles to syringes without contact contamination.
_____ Punctures vial stoppers and spikes infusion ports without contact contamination.
_____ Labels preparation(s) correctly.
_____ Disinfects sterile gloves routinely by wiping with sterile 70% IPA during prolonged compounding manipulations.
_____ Cleans, sets up, and calibrates automated compounding device (e.g., "TPN compounder") according to manufacturer's instructions.
_____ Disposes of sharps and waste according to institutional policy or recognized guidelines.

***The person assessed is immediately informed of all unacceptable activities (i.e., spaces lacking check marks, N/A, or N/O) and shown and informed of specific corrections.**

Signature of Person Assessed	Printed Name	Date
Signature of Qualified Evaluator	Printed Name	Date

Accessed from 167.78.4.19 by James Cumbie (ocean22) on Mon Sep 09 15:04:23 EDT 2013

Appendix V. Sample Form for Assessing Cleaning and Disinfection Procedures

Printed name and position/title of person assessed: _____

Name of facility or location: _____

Cleaning and Disinfection Practices: The qualified evaluator will check each space for which the person being assessed has acceptably completed the described activity, prints N/A if the activity is not applicable to the assessment session or N/O if the activity was not observed.*

Daily Tasks:

_____ Prepares correct concentration of disinfectant solution according to manufacturer's instructions.
_____ Uses appropriately labeled container for the type of surface to be cleaned (floor, wall, production bins, etc.).
_____ Documents disinfectant solution preparation.
_____ Follows garbing procedures when performing any cleaning activities.
_____ At the beginning of each shift, cleans all ISO Class 5 devices prior to compounding in the following order: walls, IV bar, automated compounders, and work surface.
_____ Uses a lint free wipe soaked with sterile 70% IPA or other approved disinfectant solution and allows to dry completely.
_____ Removes all compounder components and cleans all ISO Class 5 areas as stated above at the end of each shift.
_____ Cleans all counters and easily cleanable work surfaces.
_____ Mops floors, using the mop labeled "floors," starting at the wall opposite the room entry door; mops floor surface in even strokes toward the operator. Moves carts as needed to clean entire floor surface. Use of a microfiber cleaning system is an acceptable alternative to mops.
_____ In the ante-area, cleans sink and all contact surfaces; cleans floor with a disinfectant solution or uses microfiber cleaning system.

Monthly Tasks:

_____ Performs monthly cleaning on a designated day. Prepares a disinfectant solution as stated in daily tasks that is appropriate for the surfaces to be cleaned.
_____ Cleans buffer area and ante-area ceiling, walls, and storage shelving with a disinfectant solution and a mop or uses a microfiber cleaning system.
_____ Once ISO Class 5 area is clean, cleans compounding room ceiling, followed by walls and ending with the floor. Uses appropriate labeled mops or microfiber cleaning system.
_____ Cleans all buffer area totes and storage shelves by removing contents and using a germicidal detergent soaked lint free wipe, cleans the inside surfaces of the tote and then the entire exterior surfaces of the tote. Allows totes to dry. Prior to replacing contents into tote, wipes tote with sterile 70% IPA to remove disinfectant residue. Uses new wipe as needed.
_____ Cleans all buffer area carts by removing contents and using germicidal detergent soaked lint free wipe, cleans all carts starting with the top shelf and top of post, working down to wheels. Cleans the under side of shelves in a similar manner. Uses a new wipe for each cart. Allows to dry. Wipes carts with sterile 70% IPA wetted lint-free wipe to remove any disinfectant residue. Uses new wipe as needed.
_____ Cleans buffer area chairs, the interior and exterior of trash bins, and storage bins using disinfectant solution soaked lint free wipe.
_____ Documents all cleaning activities as to who performed such activities with date and time noted.

***The person assessed is immediately informed of all unacceptable activities (i.e., spaces lacking check marks, N/A, or N/O) and shown and informed of specific corrections.**

Signature of Person Assessed	Printed Name	Date
Signature of Qualified Evaluator	Printed Name	Date

⟨1160⟩ PHARMACEUTICAL CALCULATIONS IN PRESCRIPTION COMPOUNDING

INTRODUCTION

The purpose of this chapter is to provide general information to guide and assist pharmacists in performing the necessary calculations when preparing or compounding any pharmaceutical article (see *Pharmaceutical Compounding—Nonsterile Preparations* ⟨795⟩, *Pharmaceutical Compounding—Sterile Preparations* ⟨797⟩, and *Good Compounding Practices* ⟨1075⟩) or when simply dispensing prescriptions (see *Stability Considerations in Dispensing Practice* ⟨1191⟩).

Correct pharmaceutical calculations can be accomplished by using, for example, proper conversions from one measurement system to another and properly placed decimal points, by understanding the arithmetical concepts, and by paying close attention to

Copyright (c) 2013 The United States Pharmacopeial Convention. All rights reserved.

the details of the calculations. Before proceeding with any calculation, pharmacists should do the following: (a) read the entire formula or prescription carefully; (b) determine which materials are needed; and then (c) select the appropriate methods of preparation and the appropriate calculation.

There are often several ways to solve a given problem. Logical methods that require as few steps as possible should be selected in order to ensure that calculations are done correctly. The best approach is the one that yields results that are accurate and free of error. The pharmacist must double-check each calculation before proceeding with the preparation of the article or prescription order. One way of double-checking is by estimation. This involves rounding off the quantities involved in the calculation, and comparing the estimated result with the calculated value.

Finally, the following steps should be taken: the dosage of each active ingredient in the prescription should be checked; all calculations should be doubly checked, preferably by another pharmacist; and where instruments are used in compounding, they should be carefully checked to ascertain that they will function properly. See *USP* general chapters *Aerosols, Nasal Sprays, Metered-Dose Inhalers, and Dry Powder Inhalers* ⟨601⟩, *Deliverable Volume* ⟨698⟩, *Density of Solids* ⟨699⟩, *Osmolality and Osmolarity* ⟨785⟩, *pH* ⟨791⟩, *Pharmaceutical Compounding—Nonsterile Preparations* ⟨795⟩, *Pharmaceutical Compounding—Sterile Preparations* ⟨797⟩, *Viscosity* ⟨911⟩, *Specific Gravity* ⟨841⟩, *Cleaning Glass Apparatus* ⟨1051⟩, *Medicine Dropper* ⟨1101⟩, *Prescription Balances and Volumetric Apparatus* ⟨1176⟩, *Teaspoon* ⟨1221⟩, *Weighing on an Analytical Balance* ⟨1251⟩, and *Good Compounding Practices* ⟨1075⟩ for information on specific instruments.

BASIC MATHEMATICAL CONCEPTS

SIGNIFICANT FIGURES

Expressed values are considered significant to the last digit shown (see *Significant Figures and Tolerances* in the *General Notices*). Significant figures are digits with practical meaning. The accuracy of the determination is implied by the number of figures used in its expression. In some calculations zeros may not be significant. For example, for a measured weight of 0.0298 g, the zeros are not significant; they are used merely to locate the decimal point. In the example, 2980 g, the zero may also be used to indicate the decimal point, in which case the zero is not significant. Alternately, however, the zero may indicate that the weight is closer to 2981 g or 2979 g, in which case the zero is significant. In such a case, knowledge of the method of measurement would be required in order to indicate whether the zero is or is not significant. In the case of a volume measurement of 298 mL, all of the digits are significant. In a given result, the last significant figure written is approximate but all preceding figures are accurate. For example, a volume of 29.8 mL implies that 8 is approximate. The true volume falls between 29.75 and 29.85. Thus, 29.8 mL is accurate to the nearest 0.1 mL, which means that the measurement has been made within ±0.05 mL. Likewise, a value of 298 mL is accurate to the nearest 1 mL and implies a measurement falling between 297.5 and 298.5, which means that the measurement has been made within ±0.5 mL and is subject to a maximum error calculated as follows:

$$(0.5\ \text{mL}/298\ \text{mL}) \times 100\% = 0.17\%$$

A zero in a quantity such as 298.0 mL is a significant figure and implies that the measurement has been made within the limits of 297.95 and 298.05 with a possible error calculated as follows:

$$(0.05\ \text{mL}/298.0\ \text{mL}) \times 100\% = 0.017\%$$

EXAMPLES—

1. 29.8 mL = 29.8 ± 0.05 mL (accurate to the nearest 0.1 mL)
2. 29.80 mL = 29.80 ± 0.005 mL (accurate to the nearest 0.01 mL)
3. 29.800 mL = 29.800 ± 0.0005 mL (accurate to the nearest 0.001 mL)

The degree of accuracy in the last example is greatest. Thus, the number of significant figures provides an estimate both of true value and of accuracy.

EXAMPLES OF SIGNIFICANT FIGURES—

Measurement	Number of Significant Figures
2.98	3
2.980	4
0.0298	3
0.0029	2

Calculations—All figures should be retained until the calculations have been completed. Only the appropriate number of significant figures, however, should be retained in the final result.

Determining the number of significant figures—

Sums and *Differences*—When adding or subtracting, the number of decimal places in the result shall be the same as the number of decimal places in the component with the fewest decimal places.

Accessed from 167.78.4.19 by James Cumbie (ocean22) on Mon Sep 09 15:04:23 EDT 2013

EXAMPLE—

$$11.5 + 11.65 + 9.90 = 33.1$$

Products and *Quotients*—When multiplying or dividing, the result shall have no more significant figures than the measurement with the smallest number of significant figures entering into the calculation.

EXAMPLE—

$$4.266 \times 21 = 90$$

Rounding Off—For rules on rounding off measurements or calculated results, see *Interpretation of Requirements* under *Significant Figures and Tolerances* in the *General Notices*. Note, however, that in the example above, if 21 is an absolute number (e.g., the number of doses), then the answer, 89.586, is rounded off to 89.59 which has 4 significant figures.

LOGARITHMS

The logarithm of a number is the exponent or the power to which a given base must be raised in order to equal that number.

Definitions—

$$pH = -\log [H^+], \text{ and}$$

$$pKa = -\log Ka$$

$pH = -\log [H^+]$, and $pKa = -\log Ka$, where $[H^+]$ is the hydrogen ion concentration in an aqueous solution and Ka is the ionization constant of the acid in an aqueous solution. The $[H^+]$ = the antilogarithm of (–pH), and the Ka = the antilogarithm of (–pKa).

The pH of an aqueous solution containing a weak acid may be calculated using the Henderson-Hasselbalch equation:

$$pH = pKa + \log [salt]/[acid]$$

EXAMPLE—

A solution contains 0.020 moles per L of sodium acetate and 0.010 mole per L of acetic acid, which has a pKa value of 4.76. Calculate the pH and the $[H^+]$ of the solution. Substituting into the above equation, pH = 4.76 + log (0.020/0.010) = 5.06, and the $[H^+]$ = antilogarithm of (–5.06) = 8.69×10^{-6}.

BASIC PHARMACEUTICAL CALCULATIONS

The remainder of this chapter will focus on basic pharmaceutical calculations. It is important to recognize the rules involved when adding, subtracting, dividing, and multiplying values. The interrelationships between various units within the different weighing and measuring systems are also important and have to be understood.

CALCULATIONS IN COMPOUNDING

The pharmacist must be able to calculate the amount or concentration of drug substances in each unit or dosage portion of a compounded preparation at the time it is dispensed. Pharmacists must perform calculations and measurements to obtain, theoretically, 100% of the amount of each ingredient in compounded formulations. Calculations must account for the active ingredient, or active moiety, and water content of drug substances, which includes that in the chemical formulas of hydrates. Official drug substances and added substances must meet the requirements under *Loss on Drying* ⟨731⟩, which must be included in the calculations of amounts and concentrations of ingredients. The pharmacist should consider the effect of ambient humidity on the gain or loss of water from drugs and added substances in containers subjected to intermittent opening over prolonged storage. Each container should be opened for the shortest duration necessary and then closed tightly immediately after use.

The nature of the drug substance that is to be weighed and used in compounding a prescription must be known exactly. If the substance is a hydrate, its anhydrous equivalent weight may need to be calculated. On the other hand, if there is adsorbed moisture present that is either specified on a certificate of analysis or that is determined in the pharmacy immediately before the drug substance is used by the procedure under *Loss on Drying* ⟨731⟩, this information must be used when calculating the amount of drug substance that is to be weighed in order to determine the exact amount of anhydrous drug substance required.

There are cases in which the required amount of a dose is specified in terms of a cation [e.g., Li^+, netilmicin (n+)], an anion [e.g., F^-], or a molecule (e.g., theophylline in aminophylline). In these instances, the drug substance weighed is a salt or complex, a portion of which represents the pharmacologically active moiety. Thus, the exact amount of such substances weighed must be calculated on the basis of the required quantity of the pharmacological moiety.

Copyright (c) 2013 The United States Pharmacopeial Convention. All rights reserved.

The following formula may be used to calculate the exact theoretical weight of an ingredient in a compounded preparation:

$$W = ab/de$$

in which W is the actual weighed amount; a is the prescribed or pharmacist-determined weight of the active or functional moiety of drug or added substance; b is the chemical formula weight of the ingredient, including waters of hydration for hydrous ingredients; d is the fraction of dry weight when the percent by weight of adsorbed moisture content is known from the loss on drying procedure (see *Loss on Drying* ⟨731⟩); and e is the formula weight of the active or functional moiety of a drug or added substance that is provided in the formula weight of the weighed ingredient.

Example 1: Triturate Morphine Sulfate USP and Lactose NF to obtain 10 g in which there are 30 mg of Morphine Sulfate USP for each 200 mg of the morphine-lactose mixture. [NOTE—Clinical dosages of morphine mean Morphine Sulfate USP, which is the pentahydrate.]

Equation Factor	Numerical Value
W	weight, in g, of Morphine Sulfate USP
a	1.5 g of morphine sulfate pentahydrate in the prescription
b	759 g/mole
d	1.0
e	759 g/mole

$$W = (1.5\ g \times 759\ g/mole)/(1.0 \times 759\ g/mole) = 1.5\ g$$

Example 2: Accurately weigh an amount of Aminophylline USP to obtain 250 mg of anhydrous theophylline. [NOTE—The powdered aminophylline dihydrate weighed contains 0.4% w/w adsorbed moisture as stated in the Certificate of Analysis.]

Equation Factor	Numerical Value
W	weight, in mg, of Aminophylline USP (dihydrate)
a	250 mg of theophylline
b	456 g/mole
d	0.996
e	360 g/mole

$$W = (250\ mg \times 456\ g/mole)/(0.996 \times 360\ g/mole) = 318\ mg$$

Example 3: Accurately weigh an amount of Lithium Citrate USP (containing 2.5% moisture as stated in the Certificate of Analysis) to obtain 200 mEq of lithium (Li^+). [NOTE—One mEq of Li^+ is equivalent to 0.00694 g of Li^+.]

Equation Factor	Numerical Value
W	weight, in g, of Lithium Citrate USP (tetrahydrate)
a	200 mEq of Li^+ or 1.39 g of Li^+
b	282 g/mole
d	0.975
e	3 × 6.94 g/mole or 20.8 g/mole

$$W = (1.39\ g \times 282\ g/mole)/(0.975 \times 20.8\ g/mole) = 19.3\ g$$

Example 4: Accurately weigh an amount of Netilmicin Sulfate USP, equivalent to 2.5 g of netilmicin. [NOTE—Using the procedure under *Loss on Drying* ⟨731⟩, the Netilmicin Sulfate USP that was weighed lost 12% of its weight.]

Equation Factor	Numerical Value
W	weight, in g, of Netilmicin Sulfate USP
a	2.5 g
b	1442 g/mole
d	0.88
e	951 g/mole

$$W = (2.5\ g \times 1442\ g/mole)/(0.88 \times 951\ g/mole) = 4.31\ g$$

Accessed from 167.78.4.19 by James Cumbie (ocean22) on Mon Sep 09 15:04:23 EDT 2013

BUFFER SOLUTIONS

Definition—A buffer solution is an aqueous solution that resists a change in pH when small quantities of acid or base are added, when diluted with the solvent, or when the temperature changes. Most buffer solutions are mixtures of a weak acid and one of its salts or mixtures of a weak base and one of its salts. Water and solutions of a neutral salt such as sodium chloride have very little ability to resist the change of pH and are not capable of effective buffer action.

Preparation, Use, and Storage of Buffer Solutions—Buffer solutions for Pharmacopeial tests should be prepared using freshly boiled and cooled water (see *Standard Buffer Solutions* under *Buffer Solutions* in *Reagents, Indicators, and Solutions*). They should be stored in containers such as Type I glass bottles and used within 3 months of preparation.

Buffers used in physiological systems are carefully chosen so as not to interfere with the pharmacological activity of the medicament or the normal function of the organism. Commonly used buffers in parenteral products, for example, are acetic, citric, glutamic, and phosphoric acids and their salts. Buffer solutions should be freshly prepared.

The Henderson-Hasselbalch equation, noted above, allows the pH of a buffer solution of a weak acid and its salt to be calculated. Appropriately modified, this equation may be applied to buffer solutions composed of a weak base and its salt.

Buffer Capacity—The buffer capacity of a solution is the measurement of the ability of that solution to resist a change in pH upon addition of small quantities of a strong acid or base. An aqueous solution has a buffer capacity of 1 when 1 L of the buffer solution requires 1 gram equivalent of strong acid or base to change the pH by 1 unit. Therefore, the smaller the pH change upon the addition of a specified amount of acid or base, the greater the buffer capacity of the buffer solution. Usually, in analysis, much smaller volumes of buffer are used in order to determine the buffer capacity. An approximate formula for calculating the buffer capacity is gram equivalents of strong acid or base added per L of buffer solution per unit of pH change, i.e., (Eq/L)/(pH change).

EXAMPLE—

The addition of 0.01 g equivalents of sodium hydroxide to 0.25 L of a buffer solution produced a pH change of 0.50. The buffer capacity of the buffer solution is calculated as follows:

$$(0.01/0.25)/0.50 = 0.08(\text{Eq/L})/(\text{pH change})$$

DOSAGE CALCULATIONS

Special Dosage Regimens—Geriatric and pediatric patients require special consideration when designing dosage regimens. In geriatric patients, the organs are often not functioning efficiently as a result of age-related pharmacokinetic changes or disease. For these patients, modifications in dosing regimens are available in references such as *USP Drug Information*.

For pediatric patients, where organs are often not fully developed and functioning, careful consideration must be applied during dosing. Modifications in dosing regimens for pediatric patients are also available in references such as *USP Drug Information*. General rules for calculating doses for infants and children are available in pharmacy calculation textbooks. These rules are not drug-specific and should be used only in the absence of more complete information.

The usual method for calculating a dose for children is to use the information provided for children for the specific drug. The dose is frequently expressed as mg of drug per kg of body weight for a 24-hour period, and is then usually given in divided portions.

The calculation may be made using the following equation:

$$(\text{mg of drug per kg of body weight}) \times (\text{kg of body weight}) = \text{dose for an individual for a 24-hour period}$$

A less frequently used method of calculating the dose is based on the surface area of the individual's body. The dose is expressed as amount of drug per body surface area in m^2, as shown in the equation below:

$$(\text{amount of drug per } m^2 \text{ of body surface area}) \times (\text{body surface area in } m^2) = \text{dose for an individual for a 24-hour period}$$

The body surface area (BSA) may be determined from nomograms relating height and weight in dosage handbooks. The BSA for adult and pediatric patients may also be determined using the following equations:

$$\text{BSA } (m^2) = \text{square root of } \{[\text{Height (in)} \times \text{Weight (lb)}]/3131\}$$

or

$$\text{BSA } (m^2) = \text{square root of } \{[\text{Height (cm)} \times \text{Weight (kg)}]/ 3600\}$$

EXAMPLE—

Rx for Spironolactone Suspension 25 mg/tsp. Sig: 9 mg BID for an 18 month-old child who weighs 22 lbs.

The *USP DI 2002,* 22nd ed., states that the normal pediatric dosing regimen for Spironolactone is 1 to 3 mg per kg per day. In this case, the weight of the child is 22 lbs, which equals 22 lbs/(2.2 lbs/kg) = 10 kg. Therefore the normal dose for this child is 10 to 30 mg per day and the dose ordered is 18 mg per day as a single dose or divided into 2 to 4 doses. The dose is acceptable based on published dosing guidelines.

Copyright (c) 2013 The United States Pharmacopeial Convention. All rights reserved.

PERCENTAGE CONCENTRATIONS

Percentage concentrations of solutions are usually expressed in one of three common forms:

$$\text{Volume percent (v/v)} = \text{Volume of solute/Volume of solution} \times 100\%$$

$$\text{Weight percent (w/w)} = (\text{Weight of solute} \times 100\%)/\text{Weight of solution}$$

$$\text{Weight in volume percent (w/v)} = (\text{Weight of solute (in g)/Volume of solution (in mL)}) \times 100\%$$

See also *Percentage Measurements* under *Concentrations* in the *General Notices*. The above three equations may be used to calculate any one of the three values (i.e., weights, volumes, or percentages) in a given equation if the other two values are known.

Note that weights are always additive, i.e., 50 g plus 25 g = 75 g. Volumes of two different solvents or volumes of solvent plus a solid solute are not strictly additive. Thus 50 mL of water + 50 mL of pure alcohol do not produce a volume of 100 mL. Nevertheless, it is assumed that in some pharmaceutical calculations, volumes are additive, as discussed below under *Reconstitution of Drugs Using Volumes Other than Those on the Label*.

EXAMPLES—

1. Calculate the percentage concentrations (w/w) of the constituents of the solution prepared by dissolving 2.50 g of phenol in 10.00 g of glycerin. Using the weight percent equation above, the calculation is as follows.

$$\text{Total weight of the solution} = 10.00\text{ g} + 2.50\text{ g} = 12.50\text{ g}$$

$$\text{Weight percent of phenol} = (2.50\text{ g} \times 100\%)/12.50\text{ g} = 20.0\%\text{ of phenol}$$

$$\text{Weight percent of glycerin} = (10\text{ g} \times 100\%)/12.50\text{ g} = 80.0\%\text{ of glycerin}$$

2. A prescription order reads as follows:
   Eucalyptus Oil 3% (v/v) in Mineral Oil.
   Dispense 30.0 mL.
   What quantities should be used for this prescription? Using the volume percent equation above, the calculation is as follows.
   Amount of Eucalyptus Oil:

$$3\% = (\text{Volume of oil in mL}/30.0\text{ mL}) \times 100\%$$

   Solving the equation, the volume of oil = 0.90 mL.
   Amount of Mineral Oil: To 0.90 mL of Eucalyptus Oil add sufficient Mineral Oil to prepare 30.0 mL.
3. A prescription order reads as follows:

Zinc oxide	7.5 g
Calamine	7.5 g
Starch	15 g
White petrolatum	30 g

   Calculate the percentage concentration for each of the four components. Using the weight percent equation above, the calculation is as follows.

$$\text{Total weight} = 7.5\text{ g} + 7.5\text{ g} + 15\text{ g} + 30\text{ g} = 60.0\text{ g}$$

$$\text{Weight percent of zinc oxide} = (7.5\text{ g zinc oxide}/60\text{ g ointment}) \times 100\% = 12.5\%$$

$$\text{Weight percent of calamine} = (7.5\text{ g calamine}/60\text{ g ointment}) \times 100\% = 12.5\%$$

$$\text{Weight percent of starch} = (15\text{ g starch}/60\text{ g ointment}) \times 100\% = 25\%$$

$$\text{Weight percent of white petrolatum} = (30\text{ g white petrolatum}/60\text{ g ointment}) \times 100\% = 50\%$$

Accessed from 167.78.4.19 by James Cumbie (ocean22) on Mon Sep 09 15:04:23 EDT 2013

SPECIFIC GRAVITY

The definition of specific gravity is usually based on the ratio of weight of a substance in air at 25° to that of the weight of an equal volume of water at the same temperature. The weight of 1 mL of water at 25° is approximately 1 g. The following equation may be used for calculations.

Specific Gravity = (Weight of the substance)/(Weight of an equal volume of water)

EXAMPLES—

1. A liquid weighs 125 g and has a volume of 110 mL. What is the specific gravity?
   The weight of an equal volume of water is 110 g.
   Using the above equation,

   specific gravity = 125 g/110 g = 1.14

2. Hydrochloric Acid NF is approximately a 37% (w/w) solution of hydrochloric acid (HCl) in water. How many grams of HCl are contained in 75.0 mL of HCl NF? (Specific gravity of Hydrochloric Acid NF is 1.18.)
   Calculate the weight of HCl NF using the above equation.
   The weight of an equal volume of water is 75 g.

   Specific Gravity 1.18 = weight of the HCl NF g/75.0 g

   Solving the equation, the weight of HCl NF is 88.5 g.
   Now calculate the weight of HCl using the weight percent equation.

   37.0 % (w/w) = (weight of solute g/88.5 g) × 100

   Solving the equation, the weight of the HCl is 32.7 g.

DILUTION AND CONCENTRATION

A concentrated solution can be diluted. Powders and other solid mixtures can be triturated or diluted to yield less concentrated forms. Because the amount of solute in the diluted solution or mixture is the same as the amount in the concentrated solution or mixture, the following relationship applies to dilution problems.

The quantity of *Solution 1* (Q_1) × concentration of *Solution 1* (C_1) = the quantity of *Solution 2* (Q_2) × concentration of *Solution 2* (C_2), or

$$(Q_1)(C_1) = (Q_2)(C_2)$$

Almost any quantity and concentration terms may be used. However, the units of the terms must be the same on both sides of the equation.

EXAMPLES—

1. Calculate the quantity (Q_2), in g, of diluent that must be added to 60 g of a 10% (w/w) ointment to make a 5% (w/w) ointment. Let

   $$(Q_1) = 60 \text{ g}, (C_1) = 10\%, \text{ and } (C_2) = 5\%$$

   Using the above equation,

   $$60 \text{ g} \times 10\% = (Q_2) \times 5\% \text{ (w/w)}$$

   Solving the above equation, the quantity of product needed, Q_2, is 120 g. The initial quantity of product added was 60 g, and therefore an additional 60 g of diluent must be added to the initial quantity to give a total of 120 g.
2. How much diluent should be added to 10 g of a trituration (1 in 100) to make a mixture that contains 1 mg of drug in each 10 g of final mixture?
   Determine the final concentration by first converting mg to g. One mg of drug in 10 g of mixture is the same as 0.001g in 10 g. Let

   $$(Q_1) = 10 \text{ g}, (C_1) = (1 \text{ in } 100),$$

   and

   $$(C_2) = (0.001 \text{ in } 10)$$

Copyright (c) 2013 The United States Pharmacopeial Convention. All rights reserved.

Using the equation for dilution,

$$10\ g \times (1/100) = (Q_2)\ g \times (0.001/10)$$

Solving the above equation,

$$(Q_2) = 1000\ g$$

Because 10 g of the final mixture contains all of the drug and some diluent, (1000 g – 10 g) or 990 g of diluent is required to prepare the mixture at a concentration of 0.001 g of drug in 10 g of final mixture.

3. Calculate the percentage strength of a solution obtained by diluting 400 mL of a 5.0% solution to 800 mL. Let

$$(Q_1) = 400\ mL,\ (C_1) = 5\%,\ \text{and}\ (Q_2) = 800\ mL$$

Using the equation for dilution,

$$400\ mL \times 5\% = 800\ mL \times (C_2)\%$$

Solving the above equation,

$$(C_2) = 2.5\%\ (w/v)$$

USE OF POTENCY UNITS

See *Units of Potency* in the *General Notices*.

Because some substances may not be able to be defined by chemical and physical means, it may be necessary to express quantities of activity in biological units of potency.

EXAMPLES—

1. One mg of Pancreatin contains not less than 25 USP Units of amylase activity, 2.0 USP Units of lipase activity, and 25 USP Units of protease activity. If the patient takes 0.1 g (100 mg) per day, what is the daily amylase activity ingested?
   1 mg of Pancreatin corresponds to 25 USP Units of amylase activity.
   100 mg of Pancreatin corresponds to

$$100 \times (25\ \text{USP Units of amylase activity}) = 2500\ \text{Units}$$

2. A dose of penicillin G benzathine for streptococcal infection is 1.2 million units intramuscularly. If a specific product contains 1180 units per mg, how many milligrams would be in the dose?
   1180 units of penicillin G benzathine are contained in 1 mg.
   1 unit is contained in 1/1180 mg.
   1,200,000 units are contained in

$$(1{,}200{,}000 \times 1)/1180\ \text{units} = 1017\ mg$$

BASE VS SALT OR ESTER FORMS OF DRUGS

Frequently, for stability or other reasons such as taste or solubility, the base form of a drug is administered in an altered form such as an ester or salt. This altered form of the drug usually has a different molecular weight (MW), and at times it may be useful to determine the amount of the base form of the drug in the altered form.

EXAMPLES—

1. Four hundred milligrams of erythromycin ethylsuccinate (molecular weight, 862.1) is administered. Determine the amount of erythromycin (molecular weight, 733.9) in this dose.
   862.1 g of erythromycin ethylsuccinate corresponds to 733.9 g of erythromycin.
   1 g of erythromycin ethylsuccinate corresponds to (733.9/862.1) g of erythromycin.
   0.400 g of erythromycin ethylsuccinate corresponds to (733.9/862.1) × 0.400 g or 0.3405 g of erythromycin.
2. The molecular weight of testosterone cypionate is 412.6 and that of testosterone is 288.4. What is the dose of testosterone cypionate that would be equivalent to 60.0 mg of testosterone?
   288.4 g of testosterone corresponds to 412.6 g of testosterone cypionate.
   1 g of testosterone corresponds to 412.6/288.4 g of testosterone cypionate.
   60.0 mg or 0.0600 g of testosterone corresponds to (412.6/288.4) × 0.0600 = 0.0858 g or 85.8 mg of testosterone cypionate.

Accessed from 167.78.4.19 by James Cumbie (ocean22) on Mon Sep 09 15:04:23 EDT 2013

RECONSTITUTION OF DRUGS USING VOLUMES OTHER THAN THOSE ON THE LABEL

Occasionally it may be necessary to reconstitute a powder in order to provide a suitable drug concentration in the final product. This may be accomplished by estimating the volume of the powder and liquid medium required.

EXAMPLES—

1. If the volume of 250 mg of ceftriaxone sodium is 0.1 mL, how much diluent should be added to 500 mg of ceftriaxone sodium powder to make a suspension having a concentration of 250 mg per mL?

$$500 \text{ mg} \times (1 \text{ mL}/250 \text{ mg}) = 2 \text{ mL}$$

$$\text{Volume of 500 mg of ceftriaxone sodium} = 500 \text{ mg} \times (0.1 \text{ mL}/250 \text{ mg}) = 0.2 \text{ mL}$$

$$\text{Volume of the diluent required} = (2 \text{ mL of suspension}) - (0.2 \text{ mL of Ceftriaxone Sodium}) = 1.8 \text{ mL}$$

2. What is the volume of dry powder cefonicid, if 2.50 mL of diluent is added to 1 g of powder to make a solution having a concentration of 325 mg per mL?

$$\text{Volume of solution containing 1 g of the powder} = 1 \text{ g of cefonicid} \times (1000 \text{ mg}/1 \text{ g}) \times (1 \text{ mL of solution}/325 \text{ mg of cefonicid}) = 3.08 \text{ mL}$$

$$\text{Volume of dry powder cefonicid} = 3.08 \text{ mL of solution} - 2.50 \text{ mL of diluent} = 0.58 \text{ mL.}$$

ALLIGATION ALTERNATE AND ALGEBRA

Alligation—Alligation is a rapid method of determining the proportions in which substances of different strengths are mixed to yield a desired strength or concentration. Once the proportion is found, the calculation may be performed to find the exact amounts of substances required. Set up the problem as follows.

1. Place the desired percentage or concentration in the center.
2. Place the percentage of the substance with the lower strength on the lower left-hand side.
3. Place the percentage of the substance with the higher strength on the upper left-hand side.
4. Subtract the desired percentage from the lower percentage, and place the obtained difference on the upper right-hand side.
5. Subtract the higher percentage from the desired percentage, and place the obtained difference on the lower right-hand side.

The results obtained will determine how many parts of the two different percentage strengths should be mixed to produce the desired percentage strength of a drug mixture.

EXAMPLES—

1. How much ointment having a 12% drug concentration and how much ointment having a 16% drug concentration must be used to make 1 kg of a preparation containing a 12.5% drug concentration?

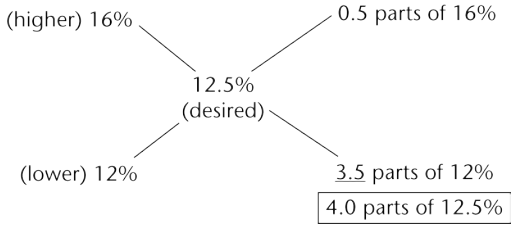

In a total of 4.0 parts of 12.5% product, 3.5 parts of 12% ointment and 0.5 parts of 16% ointment are needed.
4 parts correspond to 1 kg or 1000 g.
1 part corresponds to 250 g.
3.5 parts correspond to 3.5 × 250 g or 875 g.
0.5 parts correspond to 0.5 × 250 g or 125 g.

Copyright (c) 2013 The United States Pharmacopeial Convention. All rights reserved.

2. How many mL of 20% dextrose in water and 50% dextrose in water are needed to make 750 mL of 35% dextrose in water?

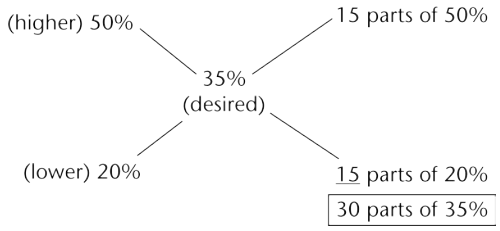

In a total of 30 parts of 35% dextrose in water, 15 parts of 50% dextrose in water and 15 parts of 20% dextrose in water are required.
30 parts correspond to 750 mL.
15 parts correspond to 375 mL.
Thus use 375 mL of the 20% solution and 375 mL of the 50% solution to prepare the product.

Algebra—Instead of using alligation to solve the above problems, algebra may be used, following the scheme outlined below.

In order to represent the total quantity (weights, parts, or volumes) of the final mixture or solution, 1 or a specified quantity is used.

Let x be the quantity of one portion and [1 (or the specified amount) – x] be the remaining portion. Set up the equation according to the statement below, and solve.

The amount of drug in one part plus the amount of drug in the other part equals the total amount in the final mixture or solution.

EXAMPLES—

1. How much ointment having a 12% drug concentration and how much ointment having a 16% drug concentration must be used to make 1 kg of a preparation containing a 12.5% drug concentration?
Let 1 kg be the total quantity of ointment to be prepared, let x be the quantity, in kg, of the 12% ointment, and let (1 – x) be the quantity in kg of the 16% ointment. The equation is as follows:

$$(12/100)\,x + (16/100)(1 - x) = (12.5/100)(1)$$

Solving the equation, x equals 0.875 kg of the 12% ointment and (1 – x) equals (1 – 0.875) or 0.125 kg of the 16% ointment.

2. How many mL of 20% dextrose in water and 50% dextrose in water are needed to make 750 mL of 35% dextrose in water?
Let x be the volume, in mL, of the 20% solution, and let (750 – x) be the volume in mL of the 50% solution. The equation is as follows:

$$(20/100)x + (50/100)(750 - x) = (35/100)(750)$$

Solving the equation, x equals 375 mL of the 20% solution and (750 – x) equals (750 – 375) or 375 mL of the 50% solution.

MOLAR, MOLAL, AND NORMAL CONCENTRATIONS

See *Concentrations* in the *General Notices*.

Molarity—The molar concentration, M, of the solution is the number of moles of the solute contained in one L of solution.

Molality—The molal concentration, m, is the number of moles of the solute contained in one kilogram of solvent.

Normality—The normal concentration, N, of a solution expresses the number of milliequivalents (mEq) of solute contained in 1 mL of solution or the number of equivalents (Eq, gram-equivalent weight) of solute contained in 1 L of solution. When using normality, the pharmacist must apply quantitative chemical analysis principles using molecular weight (MW). Normality depends on the reaction capacity of a chemical compound and therefore the reaction capacity must be known. For acids and bases, reaction capacity is the number of accessible protons available from, or the number of proton binding sites available on, each molecular aggregate. For electron transfer reactions, reaction capacity is the number of electrons gained or lost per molecular aggregate.

EXAMPLES—

1. How much sodium bicarbonate powder is needed to prepare 50.0 mL of a 0.07 N solution of sodium bicarbonate ($NaHCO_3$)? (MW of $NaHCO_3$ is 84.0 g per mol.)
In an acid or base reaction, because $NaHCO_3$ may act as an acid by giving up one proton, or as a base by accepting one proton, one Eq of $NaHCO_3$ is contained in each mole of $NaHCO_3$. Thus the equivalent weight of $NaHCO_3$ is 84 g. [NOTE—The volume, in L, × normality of a solution equals the number of equivalents in the solution.]
The number of equivalents of $NaHCO_3$ required = (0.07 Eq/L)(50.0 mL/1000 mL /L) = 0.0035 equivalents.
1 equivalent weight is 84.0 g.
0.0035 equivalents equals 84.0 g/Eq × 0.0035 Eq = 0.294 g.

2. A prescription calls for 250 mL of a 0.1 N hydrochloric acid (HCl) solution. How many mL of concentrated hydrochloric acid are needed to make this solution? [NOTE—The specific gravity of concentrated hydrochloric acid is 1.18, the molecular weight

Accessed from 167.78.4.19 by James Cumbie (ocean22) on Mon Sep 09 15:04:23 EDT 2013

is 36.46 and the concentration is 37.5% (w/w). Because hydrochloric acid functions as an acid and reacts by giving up one proton in a chemical reaction, 1 Eq is contained in each mole of the compound. Thus the equivalent weight is 36.46 g.]

The number of equivalents of HCl required is 0.250 L × 0.1 N = 0.025 equivalents.

1 equivalent is 36.46 g.

0.025 equivalents correspond to 0.025 Eq × 36.46 g/Eq = 0.9115 g.

37.5 g of pure HCl are contained in 100 g of concentrated HCl.

Thus 1 g of pure HCl is contained in (100/37.5) g = 2.666 g of concentrated acid, and 0.9115 g is contained in (0.9115 × 2.666) g or 2.43 g of concentrated acid.

In order to determine the volume of the supplied acid required, use the definition for specific gravity as shown below.

Specific gravity = (weight of the substance)/(weight of an equal volume of water).

1.18 = 2.43 g/(weight of an equal volume of water).

The weight of an equal volume of water is 2.056 g or 2.06 g, which measures 2.06 mL. Thus, 2.06 mL of concentrated acid is required.

MILLIEQUIVALENTS AND MILLIMOLES

NOTE—This section addresses milliequivalents (mEq) and millimoles (mmol) as they apply to electrolytes for dosage calculations.

The quantities of electrolytes administered to patients are usually expressed in terms of mEq. This term must not be confused with a similar term used in quantitative chemical analysis as discussed above. Weight units such as mg or g are not often used for electrolytes because the electrical properties of ions are best expressed as mEq. An equivalent is the weight of a substance (equivalent weight) that supplies one unit of charge. An equivalent weight is the weight, in g, of an atom or radical divided by the valence of the atom or radical. A milliequivalent is one-thousandth of an equivalent (Eq). Because the ionization of phosphate depends on several factors, the concentration is usually expressed in millimoles, moles, or milliosmoles, which are described below. [NOTE—Equivalent weight (Eq.wt) = wt. of an atom or radical (ion) in g/valence (or charge) of the atom or radical. Milliequivalent weight (mEq.wt) = Eq.wt. (g)/1000.]

EXAMPLES—

1. Potassium (K^+) has a gram-atomic weight of 39.10. The valence of K^+ is 1^+. Calculate its milliequivalent weight (mEq wt).

$$\text{Eq wt} = 39.10\ \text{g}/1 = 39.10\ \text{g}$$

$$\text{mEq wt} = 39.10\ \text{g}/1000 = 0.03910\ \text{g} = 39.10\ \text{mg}$$

2. Calcium (Ca^{2+}) has a gram-atomic weight of 40.08. Calculate its milliequivalent weight (mEq wt).

$$\text{Eq wt} = 40.08\ \text{g}/2 = 20.04\ \text{g}$$

$$\text{mEq wt.} = 20.04\ \text{g}/1000 = 0.02004\ \text{g} = 20.04\ \text{mg}$$

NOTE—The equivalent weight of a compound may be determined by dividing the molecular weight in g by the product of the valence of either relevant ion and the number of times this ion occurs in one molecule of the compound.

3. How many milliequivalents of potassium ion (K^+) are there in a 250-mg Penicillin V Potassium Tablet? [NOTE—Molecular weight of penicillin V potassium is 388.48 g per mol; there is one potassium atom in the molecule; and the valence of K^+ is 1.]

$$\text{Eq wt} = 388.48\ \text{g}/[1(\text{valence}) \times 1\ (\text{number of charges})] = 388.48\ \text{g}$$

$$\text{mEq wt} = 388.48\ \text{g}/1000 = 0.38848\ \text{g} = 388.48\ \text{mg}$$

$$(250\ \text{mg per Tablet})/(388.48\ \text{mg per mEq}) = 0.644\ \text{mEq of } K^+ \text{ per Tablet}$$

4. How many equivalents of magnesium ion and sulfate ion are contained in 2 mL of a 50% Magnesium Sulfate Injection? (Molecular weight of $MgSO_4 \cdot 7H_2O$ is 246.48 g per mol.)

Amount of magnesium sulfate in 2 mL of 50% Magnesium Sulfate Injection

$$2\ \text{mL of Injection} \times (50\ \text{g of magnesium sulfate}/100\ \text{mL of Injection}) = 1\ \text{g}$$

$$\text{Eq wt of } MgSO_4 \cdot 7H_2O = \text{MW (g)}/(\text{valence of specified ion} \times \text{number of specified ions in one mole of salt}).$$

Copyright (c) 2013 The United States Pharmacopeial Convention. All rights reserved.

For the magnesium ion:
The number of equivalents is calculated as follows:

$$246.48/[2(\text{valence}) \times 1 \text{ (number of ions in the compound)}] = 123.24 \text{ g/Eq of magnesium ion}$$

The number of equivalents in 1 g is 1g/123.24 g/Eq = 0.008114 Eq.
The number of mEq may be calculated as follows:

$$\text{The mEq wt} = \text{Eq wt (g)}/1000 = (123.24 \text{ g/Eq})/1000 = 0.12324 \text{ g}$$

The number of milliequivalents of magnesium ion in 1 g is

$$1\text{g}/0.12324 \text{ g/mEq} = 8.114 \text{ mEq}$$

For the sulfate ion:
The number of equivalents is calculated as follows:

$$246.48/[2(\text{valence}) \times 1 \text{ (number of ions in the compound)}] = 123.24 \text{ g/Eq of sulfate ion}$$

The number of equivalents in 1 g is

$$1\text{g}/123.24 \text{ g/Eq} = 0.008114 \text{ Eq}$$

The number of mEq may be calculated as follows:

$$\text{The mEq wt} = \text{Eq wt (g)}/1000 = (123.24 \text{ g/Eq})/1000 = 0.12324 \text{ g}$$

The number of milliequivalents of sulfate ion in 1 g is

$$1\text{g}/0.12324 \text{ g/mEq} = 8.114 \text{ mEq}$$

5. A vial of Sodium Chloride Injection contains 3 mEq of sodium chloride per mL. What is the percentage strength of this solution? (Molecular weight of sodium chloride is 58.44 g per mol.)

$$1 \text{ mEq} = 1 \text{ Eq}/1000 = 58.44 \text{ g}/1000 = 0.05844 \text{ g} = 58.44 \text{ mg}$$

Amount of sodium chloride in 3 mEq per mL = 58.44 mg per mEq × 3 mEq per mL = 175.32 mg per mL.

$$175.32 \text{ mg}/1 \text{ mL} = 17532 \text{ mg}/100 \text{ mL} = 17.532 \text{ g}/100 \text{ mL} = 17.5\%$$

Using mols and *mmols*—
A number of countries have adopted the International System of Units and no longer calculate doses using mEq as described above, but instead use the terms moles (mol) and millimoles (mmol). In *USP–NF* or in the *Pharmacists' Pharmacopeia* the International System of Units is used except for the labeling of electrolytes.

Definitions—
A mole equals one gram atomic weight or gram molecular weight of a substance.
A millimole equals 1/1000 of a mole.

EXAMPLES—

1. Potassium (K) has a gram-atomic weight of 39.10. Calculate its weight in millimoles (mmol).
The weight of one mole is 39.10 g and the weight in millimoles is

$$39.10 \text{ g}/1000 = 0.0391 \text{ g or } 39.1 \text{ mg}$$

2. How many millimoles of Penicillin V are in a tablet that contains 250 mg of Penicillin V Potassium? (Molecular weight of penicillin V potassium is 388.48 g per mol.)
The weight of one mole is 388.48 and the weight in millimoles is

$$388.48/1000 = 0.3848 \text{ g or } 388.48 \text{ mg}$$

Thus there are 250 mg/388.48 mg/mmol = 0.644 mmol of Penicillin V ion per tablet.

ISOOSMOTIC SOLUTIONS

The following discussion and calculations have therapeutic implications in preparations of dosage forms intended for ophthalmic, subcutaneous, intravenous, intrathecal, and neonatal use.

Accessed from 167.78.4.19 by James Cumbie (ocean22) on Mon Sep 09 15:04:23 EDT 2013

Cells of the body, such as erythrocytes, will neither swell nor shrink when placed in a solution that is isotonic with the body fluids. However, the measurement of tonicity, a physiological property, is somewhat difficult. It is found that a 0.9% (w/v) solution of sodium chloride, which has a freezing point of – 0.52°, is isotonic with body fluids and is said to be isoosmotic with body fluids. In contrast to isotonicity, the freezing point depression is a physical property. Thus many solutions that are isoosmotic with body fluids are not necessarily isotonic with body fluids, e.g., a solution of urea. Nevertheless many pharmaceutical products are prepared using freezing point data or related sodium chloride data to prepare solutions that are isoosmotic with the body fluids. A closely related topic is osmolarity (see *Osmolality and Osmolarity* ⟨785⟩).

Freezing point data or sodium chloride equivalents of pharmaceuticals and excipients (see *Table 1* below) may be used to prepare isoosmotic solutions, as shown in the examples below.

Table 1. Sodium Chloride Equivalents (E) and Freezing Point (FP) Depressions for a 1% Solution of the Drug or Excipient

Drug or Excipient	E	FP Depression
Atropine sulfate	0.13	0.075
Sodium chloride	1.00	0.576

EXAMPLE—

Determine the amount of sodium chloride required to prepare 60 mL of an isoosmotic solution of atropine sulfate 0.5% using the sodium chloride equivalent values and also the freezing point depression values.

Using the sodium chloride equivalent values—

The total amount of substances equivalent to sodium chloride (for a 0.9% solution) = (0.9 g/100 mL) × 60 mL = 0.54 g.

The amount of atropine sulfate required = (0.5 g/100 mL) × 60 mL = 0.3 g.

1 g of atropine sulfate is equivalent to 0.13 g of sodium chloride.

0.3 g atropine sulfate is equivalent to 0.3 × 0.13 g = 0.039 g of sodium chloride.

Thus the required amount of sodium chloride is 0.54 – 0.039 = 0.501 g or 0.50 g.

Using freezing point depression values—

The freezing point depression required is 0.52°.

A 1% solution of atropine sulfate causes a freezing point depression of 0.075°.

A 0.5% solution of atropine sulfate causes a freezing point depression of

$$0.075° \times 0.5 = 0.0375°$$

The additional freezing point depression required is

$$0.52° - 0.0375° = 0.482°$$

A 1% solution of sodium chloride causes a freezing point depression of 0.576°.

A (1%/ 0.576) solution of sodium chloride causes a freezing point depression of 1°.

A (1%/ 0.576) × 0.482 = 0.836% solution of sodium chloride causes a freezing point depression of 0.482°.

The required amount of sodium chloride is

$$(0.836 \text{ g}/100 \text{ mL}) \times 60 \text{ mL} = 0.502 \text{ g or } 0.50 \text{ g}$$

FLOW RATES IN INTRAVENOUS SETS

Some calculations concerning flow rates in intravenous sets are provided below. [NOTE—Examples below are *not* to be used for treatment purposes.]

EXAMPLES—

1. Sodium Heparin 8,000 units in 250 mL Sodium Chloride Injection 0.9% solution are to be infused over 4 hours. The administration set delivers 20 drops per mL.
   What is the flow rate in mL per hour?
   In 4 hours, 250 mL are to be delivered.
   In 1 hour, 250 mL/4 = 62.5 mL are delivered.
   What is the flow rate in drops per minute?
   In 60 minutes, 62.5 mL are delivered.
   In 1 minute, 62.5 mL/60 = 1.04 mL are delivered.
   1 mL = 20 drops.
   1.04 mL = 1.04 × 20 drops = 20.8 drops.
   Thus in 1 minute, 20.8 or 21 drops are administered.
2. A 14.5 kg patient is to receive 50 mg of Sodium Nitroprusside in 250 mL of dextrose 5% in water (D5W) at the rate of 1.3 µg per kg per minute. The set delivers 50 drops per mL.
   Calculate the flow rate in mL per hour.
   The dose for 1 kg is 1.3 µg per minute.

Copyright (c) 2013 The United States Pharmacopeial Convention. All rights reserved.

The 14.5 kg patient should receive 14.5 × 1.3 µg = 18.85 µg per minute.
50 mg or 50,000 µg of drug are contained in 250 mL of D5W.
18.85 µg are contained in 250 mL × 18.85/50,000 = 0.09425 mL D5W, which is administered every minute.
In 1 minute, 0.09425 mL are administered.
In 1 hour or 60 minutes, 60 × 0.09425 mL = 5.655 or 5.7 mL are administered.
Calculate the flow rate in drops per minute.
1 mL corresponds to 50 drops per minute.
0.09425 mL corresponds to 0.09425 × 50 = 4.712 or 4.7 drops per minute.

TEMPERATURE

The relationship between Celsius degrees (°C) and Fahrenheit degrees (°F) is expressed by the following equation:

$$9\ (°C) = 5\ (°F) - 160$$

in which °C and °F are the numbers of Celsius degrees and Fahrenheit degrees, respectively.

EXAMPLES—

1. Convert 77 °F to Celsius degrees.

$$9(°C) = 5(°F) - 160$$

$$°C = [5(°F) - 160]/9 = [(5 \times 77) - 160]/9 = 25\ °C$$

2. Convert 30 °C to Fahrenheit degrees.

$$9(°C) = 5(°F) - 160$$

$$°F = [9(°C) + 160]/5 = [(9 \times 30) + 160]/5 = 86\ °F$$

The relationship between the Kelvin and the Celsius scales is expressed by the equation:

$$K = °C + 273.1$$

in which K and °C are the numbers of Kelvin degrees and Celsius degrees, respectively.

APPLICATION OF MEAN KINETIC TEMPERATURE

See *Good Storage and Distribution Practices for Drug Products* ⟨1079⟩ for the definition of mean kinetic temperature (MKT). MKT is usually higher than the arithmetic mean temperature and is derived from the Arrhenius equation. MKT addresses temperature fluctuations during the storage period of the product. The mean kinetic temperature, T_K, is calculated by the following equation:

$$T_K = \frac{\frac{-\Delta H}{R}}{\ln\left(\frac{e^{-\Delta H/RT_1} + e^{-\Delta H/RT_2} + \ldots + e^{-\Delta H/RT_n}}{n}\right)}$$

in which ΔH is the heat of activation, which equals
83.144 kJ per mol (unless more accurate information is available from experimental studies); *R* is the universal gas constant, which equals 8.3144×10^{-3} kJ per degree per mol; T_1 is the average temperature, in degrees Kelvin, during the first time period, e.g., the first week; T_2 is the average temperature, in degrees Kelvin, during the second time period, e.g., second week; and T_n is the average temperature, in degrees Kelvin during the nth time period, e.g., nth week, n being the total number of temperatures recorded. The mean kinetic temperature is calculated from average storage temperatures recorded over a one-year period, with a minimum of twelve equally spaced average storage temperature observations being recorded (see *Good Storage and Distribution Practices for Drug Products* ⟨1079⟩). This calculation can be performed manually with a pocket calculator or electronically with computer software.

Accessed from 167.78.4.19 by James Cumbie (ocean22) on Mon Sep 09 15:04:23 EDT 2013

EXAMPLES—

1. The means of the highest and lowest temperatures for 52 weeks are 25 °C each. Calculate the MKT.

$$n = 52$$

$$\Delta H/R = 10{,}000\ K$$

$$T_1, T_2, \ldots, T_n = 25\ °C = 273.1 + 25 = 298.1\ K$$

$$R = 0.0083144\ kJ\ K^{-1}mol^{-1}$$

$$\Delta H = 83.144\ kJ\ per\ mol$$

$$T_K = \frac{\frac{-\Delta H}{R}}{\ln\left(\frac{e^{-\Delta H/RT_1} + e^{-\Delta H/RT_2} + \ldots + e^{-\Delta H/RT_n}}{n}\right)}$$

$$= -10{,}000K/(\ln[(52 \times e^{-\Delta H/R \times 298.1})/52)]$$

$$= -10{,}000K/(\ln[(52 \times e^{-33.5458})/52)]$$

$$-10{,}000K/-33.5458 = 298.1K = 25.0°C$$

The calculated MKT is 25.0 °C. Therefore the controlled room temperature requirement is met by this pharmacy. [NOTE—If the averages of the highest and lowest weekly temperatures differed from each other and were in the allowed range of 15 °C to 30 °C (see ⟨659⟩ *Packaging and Storage Requirements*), then each average would be substituted individually into the equation. The remaining two examples illustrate such calculations, except that the monthly averages are used.]

2. A pharmacy recorded a yearly MKT on a monthly basis, starting in January and ending in December. Each month, the pharmacy recorded the monthly highest temperature and the monthly lowest temperature, and the average of the two was calculated and recorded for the MKT calculation at the end of the year (see *Table 2*). From these data the MKT may be estimated or it may be calculated. If more than half of the observed temperatures are lower than 25 °C and a mean lower than 23 °C is obtained, the MKT may be estimated without performing the actual calculation.
   a. To estimate the MKT, the recorded temperatures are evaluated and the average is calculated. In this case, the calculated arithmetic mean is 22.9 °C. Therefore, the above requirements are met and it can be concluded that the mean kinetic temperature is lower than 25 °C. Therefore, the controlled room temperature requirement is met.

Table 2. Data for Calculation of MKT

n	Month	Lowest Temperature (in °C)	Highest Temperature (in °C)	Average Temperature (in °C)	Average Temperature (in K)	ΔH/RT	$e^{-\Delta H/RT}$
1	Jan.	15	27	21	294.1	34.002	1.710×10^{-15}
2	Feb.	20	25	22.5	295.6	33.830	2.033×10^{-15}
3	Mar.	17	25	21	294.1	34.002	1.710×10^{-15}
4	Apr.	20	25	22.5	295.6	33.830	2.033×10^{-15}
5	May	22	27	24.5	297.6	33.602	2.551×10^{-15}
6	June	15	25	20	293.1	34.118	1.523×10^{-15}
7	July	20	26	23	296.1	33.772	2.152×10^{-15}
8	Aug.	22	26	24	297.1	33.659	2.411×10^{-15}
9	Sept.	23	27	25	298.1	33.546	2.699×10^{-15}
10	Oct.	20	28	24	297.1	33.659	2.411×10^{-15}
11	Nov.	20	24	22	295.1	33.887	1.919×10^{-15}
12	Dec.	22	28	25	298.1	33.546	2.699×10^{-15}

Copyright (c) 2013 The United States Pharmacopeial Convention. All rights reserved.

b. The second approach is to perform the actual calculation.

$$n = 12$$

$$T_K = \frac{\frac{-\Delta H}{R}}{\ln\left(\frac{e^{-\Delta H/RT_1} + e^{-\Delta H/RT_2} + \ldots + e^{-\Delta H/RT_n}}{n}\right)}$$

$$= \frac{-10{,}000K}{\ln\left(\frac{1.710 \times 10^{-15} + 2.033 \times 10^{-15} + 1.710 \times 10^{-15} + \ldots + 2.699 \times 10^{-15}}{12}\right)}$$

$$= -10{,}000K/\ln[(2.585 \times 10^{-14})/12]$$

$$-10{,}000K/-33.771 = 296.11K = 23.0°C$$

The calculated MKT is 23.0 °C, so the controlled room temperature requirement is met. [NOTE—These data and calculations are used only as an example.]

3. An article was stored for one year in a pharmacy where the observed monthly average of the highest and lowest temperatures was 25 °C (298.1 K), except for one month with an average of 28 °C (301.1 K). Calculate the MKT of the pharmacy.

$$n = 12$$

$$T_K = \frac{\frac{-\Delta H}{R}}{\ln\left(\frac{e^{-\Delta H/RT_1} + e^{-\Delta H/RT_2} + \ldots + e^{-\Delta H/RT_n}}{n}\right)}$$

$$= \frac{\frac{-\Delta H}{R}}{\ln\left(\frac{11 \times e^{\Delta H/(R \times 298.1)} + 1 \times e^{\Delta H/(R \times 301.1)}}{12}\right)}$$

$$= -10{,}000K/(\ln[(11 \times e^{-33.546} + 1 \times e^{-33.212})/12])$$

$$= -10{,}000K/(\ln[(2.9692 \times 10^{-14} + 3.7705 \times 10^{-15})/12])$$

$$= -10{,}000K/(\ln[(3.3463 \times 10^{-14})/12])$$

$$= -10{,}000K/[\ln(2.7886 \times 10^{-15})]$$

$$= -10{,}000K/-33.513 = 298.39K = 25.29°C$$

The controlled room temperature requirement is not met because the calculated MKT exceeds 25 °C. (See *Note* in Example 2 above.)

4. Using the same calculation technique for controlled room temperature, the MKT for controlled cold temperatures can also be calculated.

Accessed from 167.78.4.19 by James Cumbie (ocean22) on Mon Sep 09 15:04:23 EDT 2013

a. For example, if the mean of the highest and lowest temperatures for each week over a period of 52 weeks was 8 °C (i.e., the same mean for each week), then the MKT can be calculated as follows:

$$T_K = -10{,}000/[\ln(52e^{-\Delta H/(R \times 281.1)})/52]$$

$$T_K = -10{,}000/[\ln(e^{-\Delta H/(R \times 281.1)})]$$

$$T_K = -10{,}000/[\ln(e^{-35.575})]$$

$$= -10{,}000/[\ln(3.548 \times 10^{-16})]$$

$$= -10{,}000/-35.575$$

$$T_k = 281.1K$$

$$C = 281.1 - 273.1$$

$$C = 8°$$

b. In another example, where a variety of average temperatures are used, as would be the case in reality, if the average of the highest and lowest temperatures ranges from 0° to 15 °C, then these averages would be individually substituted into the equation. For simplification of the mathematical process, 10 intervals are shown in *Table 3* below. This illustration is intended for calculation of MKT at storage or in transit; i.e., during shipping or distribution of the critical drug product. These calculations can be performed manually or with a computer.

Table 3. Sample Data for MKT Calculations

Intervals	Low Temperature (in °C)	High Temperature (in °C)	Average Temperature (in °C)	Average Temperature (in K)	$\Delta H/RT$	$e^{-\Delta H/RT} \times 10^{16}$
1	0	5	2.5	275.6	36.284	1.746
2	2	8	5	278.1	35.958	2.419
3	3	9	6	279.1	35.829	2.752
4	3	14	8.5	281.6	35.511	3.782
5	7	15	11	284.0	35.211	5.106
6	1	6	3.5	276.6	36.153	1.990
7	5	15	10	283.1	35.323	4.565
8	2	14	8	281.1	35.575	3.548
9	2	6	4	277.1	36.088	2.124
10	3	10	6.5	279.6	35.765	2.934

Copyright (c) 2013 The United States Pharmacopeial Convention. All rights reserved.

⟨1163⟩ QUALITY ASSURANCE IN PHARMACEUTICAL COMPOUNDING

INTRODUCTION

The need for a quality assurance system is well documented in *United States Pharmacopeia (USP)* chapters for compounded preparations (see *Quality Control* under *Pharmaceutical Compounding—Nonsterile Preparations* ⟨795⟩ and *Quality Assurance (QA) Program* under *Pharmaceutical Compounding—Sterile Preparations* ⟨797⟩). A quality assurance program is guided by written procedures that define responsibilities and practices that ensure compounded preparations are produced with quality attributes appropriate to meet the needs of patients and health care professionals. The authority and responsibility for the Quality Assurance program should be clearly defined and implemented and should include at least the following nine separate but integrated components: (1) training; (2) standard operating procedures (SOPs); (3) documentation; (4) verification; (5) testing; (6) cleaning, disinfecting, and safety; (7) containers, packaging, repackaging, labeling, and storage; (8) outsourcing, if used; and (9) responsible personnel.

The definition of compounding for the purpose of this chapter is defined in general test chapter ⟨795⟩.

The safety, quality, and efficacy and/or benefit of compounded preparations depend on correct ingredients and calculations; accurate and precise measurements; appropriate formulation, facilities, equipment, and procedures; and prudent pharmaceutical judgment. As a final check, the compounder shall review each procedure in the compounding process. To ensure accuracy and completeness, the compounder shall observe the finished preparation to ensure that it appears as expected and shall investigate any discrepancies and take appropriate corrective action before the prescription is dispensed to the patient.

The water used in all aspects of compounding should meet the requirements of *Waters for Pharmaceutical Purposes* ⟨1231⟩.

Radiopharmaceuticals and radiolabeled materials have unique characteristics requiring additional quality assurances described in *Positron Emission Tomography Drugs for Compounding, Investigational, and Research Uses* ⟨823⟩ and the *Radiopharmaceuticals as CSPs* section under ⟨797⟩.

The responsibilities of the compounder and compounding personnel can be found in chapters ⟨795⟩ and ⟨797⟩.

TRAINING

Personnel involved in nonsterile or sterile compounding require additional, specific training and periodic retraining beyond the training needed for routine dispensing duties. A thorough quality assurance program for compounded preparations requires documentation of both training and skill competency. In addition, the authority and responsibility for the QA program should be clearly defined as implemented. Training for nonsterile compounders should meet or exceed the standards set forth in ⟨795⟩, and personnel training for sterile preparation compounders should meet or exceed the standards set forth in ⟨797⟩.

STANDARD OPERATING PROCEDURES

SOPs for pharmaceutical compounding are documents that describe how to perform routine and expected tasks in the compounding environment, including but not limited to procedures involving:

- Beyond-Use dating
- Chemical and physical stability
- Cleaning and disinfecting
- Component quality evaluation
- Compounding methods
- Dispensing
- Documentation
- Environmental quality and maintenance
- Equipment maintenance, calibration, and operation
- Formulation development
- Labeling
- Materials and final compounded preparation handling and storage
- Measuring and weighing
- Packaging and repackaging
- Patient monitoring, complaints, and adverse event reporting
- Patient or caregiver education and training
- Personnel cleanliness and garb
- Purchasing
- Quality Assurance and Continuous Quality Monitoring
- Safety
- Shipping
- Testing
- Training and retraining

Accessed from 167.78.4.19 by James Cumbie (ocean22) on Mon Sep 09 15:04:23 EDT 2013

SOPs are itemized instructions that describe when a task will be performed, how a task will be performed, who will perform the task, why the task is necessary, any limitations in performing the task, and what action to take when unacceptable deviations or discrepancies occur.

SOPs must be reviewed regularly and updated as necessary. Auditing and verifying compliance with established SOPs should be performed periodically. The SOP should be specific to each device and process used in compounding. Properly maintained and implemented SOPs are vital to preparation quality.

DOCUMENTATION

The purpose of documentation is to provide a record of all aspects of compounding operations and procedures that are described in this chapter, in ⟨795⟩, and in ⟨797⟩. Information on the compounding record should ideally be entered as the tasks are performed or as testing data is received. Compounding records should be reviewed for accuracy, completeness (as appropriate) and approved by QA personnel, prior to dispensing. Additionally, beyond-use dating and sterility studies, where appropriate, should be documented by reference to at least one of the following:

- Stability studies published in peer-reviewed literature,
- In-house or laboratory conducted stability and/or sterility studies,
- National compendia, or
- An extrapolation of above based on professional judgment.

VERIFICATION

Verification involves authoritatively signed assurance and documentation that a process, procedure, or piece of equipment is functioning properly and producing the expected results. The act of verification of a compounding procedure involves checking to ensure the calculations, weighing and measuring, order of mixing, and compounding techniques and equipment were appropriate and accurately performed. The quality of ingredients should be verified upon receipt (e.g., Certificate of Analysis, manufacturer's label on commmercial products, etc.). Verification may require outside laboratory testing when in-house capabilities are not adequate. Equipment verification methods are sometimes available from manufacturers of the specific equipment or can be developed in-house. The responsibility for assuring that equipment performance is verified, including work completed by contractors, resides with the compounder.

See *Component Selection, Handling, and Storage* under ⟨795⟩.

TESTING

A quality assurance program for compounded preparations should include testing during the compounding process and of the finished compounded preparation, when appropriate, as described in chapters ⟨795⟩ and ⟨797⟩. The compounder should have a basic understanding of pharmaceutical analysis to ensure that valid results are obtained when tests are being conducted, whether they are done in-house or outsourced. Acceptance criteria shall be determined prior to testing. Testing every compounded preparation is neither practical nor officially required, but compounders should conduct visual inspections and know: (1) the importance of testing in the overall quality program in the compounding facility, (2) when to test, (3) what to test, (4) what appropriate method(s) and equipment to use, (5) how to interpret the results, (6) the limits of the test, and (7) specific actions required when a preparation does not meet specifications. Investigative and corrective action should extend to other preparations that may have been associated with the specific failure or discrepancy. Testing may involve one or more quality attributes, and each test will have one or more acceptable procedures, usually with well-defined acceptance criteria.

The goal in testing is to determine accurately the adequacy of the compounding process and the quality of the preparation. Any testing procedure used should have accuracy, reproducibility, and specificity. No single testing procedure is suitable for all drugs or preparations because a number of factors determine the validity and reliability of results.

Compounding professionals have two options for the testing that is required for compounded preparations or their ingredients. Some testing methods can easily be performed at the compounding site, but some may need to be outsourced to a contract laboratory. Some testing methods can be conducted in-house by an individual who possesses a good understanding of pharmaceutical analysis and proper training. See *Table 1* for a list of compendial testing methods and *USP* chapters for reference.

If testing is done at the compounding site, appropriate equipment shall be obtained and qualified either by the manufacturer upon sale or by the compounding professional upon receipt and shall be maintained, calibrated, and used properly. If testing is outsourced, the compounding professional should determine what to outsource, how to select a laboratory, and should develop an ongoing relationship with the laboratories chosen. Contract laboratories shall follow standards set forth in *USP* general chapters, as appropriate, and preferably should be registered with the U.S. Food and Drug Administration (FDA).

Selection of a Testing Method—One general consideration in testing procedure selection is the type of information needed, such as quantitative (strength, concentration), semiquantitative (where a tolerance level is involved, as in endotoxin levels), or qualitative (presence/absence testing, including substance identification, sterility). Another consideration involves the physical and chemical characteristics of the analyte, including solubility, partition coefficient, dissociation constant (pKa), volatility, binding, and the quantity present. The testing method selected also depends upon factors such as sample handling/preparation/purification requirements; type of data needed; and accuracy, reproducibility, and specificity required.

The degree of quantitative measurement and specificity must be considered in the verification process. The typical analytical characteristics used in method verification include accuracy, precision, specificity, detection limit, quantitation limit, linearity, range, and ruggedness. Generally, the greater the level of accuracy, precision, or specificity required, the more sophisticated and expensive

Copyright (c) 2013 The United States Pharmacopeial Convention. All rights reserved.

the testing methods needed. The methods used are also governed by the types of instrumentation available and the standards available for comparison.

Pharmaceutical analysis decisions include procedure selection, obtaining a representative sample (the number of preparation units selected to adequately represent the entire formulation, e.g., 10 randomly selected capsules from a preparation of 100 capsules), storage/shipping of the sample, sample preparation for analysis, the actual analysis, data acquisition, data treatment, and interpretation.

The compounding professional is responsible for implementing a program using selected testing methods for the preparations compounded in the facility. *USP* chapters on spectroscopy and chromatography methods are referenced in *Table 1*. Examples of general and microbiological testing methods are discussed later in this chapter. Examples of selected testing methods for bulk substances and various dosage forms (see *Pharmaceutical Dosage Forms* ⟨1151⟩) are shown in *Table 2*.

Sampling Requirements—Before collecting samples for testing, compounding professionals should consider the following factors:

- Quantity of preparation being compounded, for a specific prescription versus in anticipation of prescriptions routinely received
- Number of samples needed
- Destructive or nondestructive testing
- Appropriate methods of obtaining representative samples
- Physical state of the samples (solid, liquid, or gas)
- Type of container required for collection and storage
- Any special handling and shipping requirements or restrictions (e.g., controlled drug substances, dangerous or hazardous chemicals, flammable or caustic substances, and refrigerated or frozen preparations)

Storage Requirements—Storage requirements for samples must be specified, including type of container, temperature, humidity, and light protection (see *General Notices and Requirements* and the *Containers, Packaging, Repackaging, Labeling, and Storage* section in this chapter).

Table 1. U.S. Pharmacopeia Chapters for Selected Quality Testing Methods and Procedures

	Chapter Title	Chapter
General Testing		
Boiling point	Distilling Range	⟨721⟩
Density	Density of Solids	⟨699⟩
Ion selective potentiometry	—	—
Loss on drying	Loss on Drying Pharmaceutical Calculations in Prescription Compounding	⟨731⟩ ⟨1160⟩
Melting point	Melting Range or Temperature	⟨741⟩
Osmolality and osmolarity	Pharmaceutical Calculations in Prescription Compounding Osmolality and Osmolarity	⟨1160⟩ ⟨785⟩
Particle size	Powder Fineness	⟨811⟩
Particulate matter in injections	Particulate Matter in Injections	⟨788⟩
pH	pH	⟨791⟩
Refractive index	Refractive Index	⟨831⟩
Viscosity change	Viscosity	⟨911⟩
Volumetric	Prescription Balances and Volumetric Apparatus	⟨1176⟩
Weight	Prescription Balances and Volumetric Apparatus	⟨1176⟩
Spectroscopy		
Flame emission and atomic absorption spectroscopy	Spectrophotometry and Light-Scattering	⟨851⟩
Fluorescence/phosphorescence spectroscopy	Spectrophotometry and Light-Scattering	⟨851⟩
Infrared spectroscopy	Spectrophotometry and Light-Scattering	⟨851⟩
Ultraviolet/visible spectroscopy	Spectrophotometry and Light-Scattering	⟨851⟩
Chromatography		
Column chromatography (CC)	Chromatography	⟨621⟩
Gas chromatography (GC)	Chromatography	⟨621⟩
High-performance liquid chromatography (HPLC)	Chromatography	⟨621⟩
Paper chromatography (PC)	Chromatography	⟨621⟩
Thin-layer chromatography (TLC)	Chromatography	⟨621⟩
Microbiology		
Endotoxin testing	Bacterial Endotoxins Test	⟨85⟩
Microbial limit testing	Microbiological Examination of Nonsterile Products: Microbial Enumeration Tests Microbiological Examination of Nonsterile Products: Tests for Specified Microorganisms	⟨61⟩ ⟨62⟩
Preservative effectiveness testing	Antimicrobial Effectiveness Testing	⟨51⟩
Sterility	Sterility Tests	⟨71⟩

Accessed from 167.78.4.19 by James Cumbie (ocean22) on Mon Sep 09 15:04:23 EDT 2013

The effect(s) that any substance has on the compounded preparation that may interfere or alter the results must be known beforehand. When sending a preparation to a contract laboratory, the compounder should provide the complete written formulation so that the laboratory can quickly determine if there may be any interfering substances present.

Data Interpretation Requirements—The collection of raw data from the testing process must be completed accurately. One must ensure that appropriate and valid descriptive statistics (e.g., mean, standard deviation) are used to analyze the data and that the operating parameters of the analytical instruments are well-established. Reference values, if available, should be provided with the analytical results. A description of the analytical controls used by the laboratory is important for documentation, as is the source of reference standards used to establish standard curves.

Personnel Requirements and Considerations—If testing is done in-house, personnel involved in this activity must be appropriately trained and evaluated with documentation of the training and evaluation. If testing is outsourced, the compounder must be assured of the credentials, proper training, and continuing competency activities of the personnel in the contract laboratory.

PHYSICAL TESTING OF DOSAGE UNITS

NOTE: In this section the terms "unit" and "dosage unit" are synonymous. To ensure the consistency of dosage units, each unit in a batch should have a uniform weight within a narrow range. Dosage units are defined as dosage forms containing a single dose or a part of a dose in each unit. If multiple dose units are compounded in a batch formulation, the total number of units should not deviate outside of ±10% of the theoretical number of units.

WEIGHT ASSESSMENT

First, zero or tare the balance. During the compounding process intermediate weighing may be necessary to ensure that all substances have been included and weighed accurately.

At the end of the compounding process, for the dosage form and quantity designated, take care to preserve the integrity of each dosage unit during the following assessment procedures. Assume the concentration (weight of drug substance per weight of dosage unit) is uniform. The following are examples of weight assessment.

Hard Capsules—

- Zero or tare balance with an empty capsule.

Table 2. Selected Compendial Testing Methods for Bulk Substances and Various Dosage Forms

Bulk Substances and Dosage Forms	Testing Method[a]													
	Wt	Vol	pH	Osm	RI	Sp Gr	MP	UV/Vis	HPLC	GC	IR	Sterile	Endotoxin	PM
Bulk substances	–	–	+	–	+	–	+	+	+	+	+	–	+[b]	–
Capsules	+	–	–	–	–	–	–	–	+	+	–	–	–	–
Emulsions	+	+	+	–	–	+	–	–	+	+	–	–	–	–
Gels	+	+	+	–	+	+	–	–	+	+	–	–	–	–
Inhalations	+	+	+	+	+	+	–	+	+	+	–	+	+	–
Injections	+	+	+	+	+	+	–	+	+	+	–	+	+	+
Inserts	+	–	–	–	–	+	+	–	+	+	–	–	–	–
Irrigations	+	+	+	+	+	+	–	+	+	+	–	+	+	–
Lozenges	+	–	–	–	–	–	–	–	+	+	–	–	–	–
Nasals	+	+	+	+	+	+	–	+	+	+	–	*[c]	–	–
Ophthalmics	+	+	+	+	+	+	–	+	+	+	–	+	–	+[d]
Otics	+	+	+	+	+	+	–	+	+	+	–	–	–	–
Powders	+	–	–	–	–	–	–	–	+	+	–	–	–	–
Semisolids	+	–	+	–	–	+	+	–	+	+	–	–	–	–
Solutions, nonsterile	+	+	+	+	+	+	–	+	+	+	–	–	–	–
Sterile implant gels	+	+	+	+	+	+	–	+	+	+	–	+	+	–
Sterile implant solids	+	+	–	–	–	–	+	+	+	+	–	+	+	–
Sticks	+	–	–	–	–	+	+	–	+	+	–	–	–	–
Suppositories	+	–	–	–	–	+	+	–	+	+	–	–	–	–
Suspensions, nonsterile	+	+	+	–	–	+	–	–	+	+	–	–	–	–
Tablets	+	–	–	–	–	–	–	–	+	+	–	–	–	–

[a] Wt, weight; Vol, volume; Osm, osmolality/osmolarity; RI, refractive index; Sp Gr, specific gravity; MP, melting point; UV/Vis, ultraviolet/visible spectroscopy; HPLC, high-performance liquid chromatography; GC, gas chromatography; IR, infrared spectroscopy; PM, particulate matter; +, test applicable; –, test not applicable.

[b] Endotoxin testing may be needed for bulk substances used in compounding some sterile preparations.

[c] *, microbial limits (see *Microbiological Examination of Nonsterile Products: Acceptance Criteria for Pharmaceutical Preparations and Substances for Pharmaceutical Use* ⟨1111⟩ and *Pharmaceutical Compounding—Sterile Preparations* ⟨797⟩).

[d] Solutions only, not suspensions or ointments.

Copyright (c) 2013 The United States Pharmacopeial Convention. All rights reserved.

- Accurately weigh each individual filled capsule from a representative sample of the finished batch (for example, a minimum of 5% of total capsules or 10 individual capsules, whichever is less) and record the weight of each finished capsule on the compounding record.
- Calculate the theoretical weight of a finished capsule's contents.
- Compare the actual content weight of each finished capsule in the representative sample with the theoretical weight of a finished capsule's contents.
- Determine if there is a deviation outside ±10% with any weight of a finished capsule's contents and the theoretical weight of a finished capsule, and if so,
  - — Review the compounding record to ensure no steps were omitted.
  - — Repeat with a larger representative sample of the finished batch (10% of total capsules or 20 individual capsules, whichever is less). Do not mix with the first batch tested.
- If a deviation outside of ±10% is discovered in the second representative sample, then destroy the batch.

Other Solids (Including Tablets, Suppositories, Inserts, and Lozenges)—

- Accurately weigh each individual dosage unit from a representative sample of the finished batch (for example, a minimum of 5% of total tablets or 10 individual tablets, whichever is less) and record the weight of each dosage unit on the compounding record.
- Calculate the theoretical weight of the dosage unit.
- Compare the actual weight of each dosage unit in the representative sample with the theoretical weight of a dosage unit.
- Determine if there is a deviation outside ±10% with any weight of a finished dosage unit and the theoretical weight of a finished dosage unit, and if so,
  - — Review the compounding record to ensure no steps were omitted.
  - — Repeat with a larger representative sample of the finished batch (10% of total tablets or 20 individual tablets, whichever is less). Do not mix with the first batch tested.
- If a deviation outside of ±10% is discovered in the second representative sample, then destroy the batch.

Semi-Solids (Including Creams, Gels, and Ointments)—

- Accurately weigh an empty container and record the weight on the compounding record.
- Fill an empty container with the final compounded preparation.
- Calculate the theoretical weight of the compounded preparation.
- Weigh the filled container.
- Determine if there is a deviation outside of ±10%, and if so, review the compounding record to ensure no steps were omitted. If the deviation cannot be explained, destroy the batch and prepare a new one.

Additional Quality Assurance Checks Before Packaging Semi-Solids—

- — Visually inspect the preparation for foreign materials and expected appearance.
- — Measure pH, when applicable.

MICROBIOLOGICAL TESTING

Microbiological testing for pharmacy compounding includes sterility, endotoxin, preservative effectiveness testing, and microbial limit testing (see ⟨797⟩).

Sterility Testing—Sterility tests may be conducted using commercial kits or by developing and verifying USP sterility testing protocols. Standards and procedures are explained in ⟨71⟩.

Endotoxin Testing—Endotoxin tests may be conducted using commercial kits or by purchasing the components separately. Endotoxin testing may be performed in-house with appropriate training and experience. See ⟨85⟩.

Preservative Effectiveness Testing—Preservative effectiveness testing may be conducted when preparing a frequently compounded formulation that contains a preservative. When such a test is performed, the results shall support the beyond-use-date (BUD) assigned to the compounded preparations. See ⟨51⟩.

Microbial Limit Testing—Microbial limit testing may be conducted to provide an estimate of the number of viable aerobic microorganisms (see ⟨61⟩) or to demonstrate freedom from designated microbial species (see ⟨62⟩).

CLEANING, DISINFECTING, AND SAFETY

This section applies to both equipment and facilities (see ⟨795⟩, ⟨797⟩, and *Disinfectants and Antiseptics* ⟨1072⟩).

CONTAINERS, PACKAGING, REPACKAGING, LABELING, AND STORAGE

For storage, packaging, repackaging, and labeling of compounded preparations and repackaging of manufactured products (when defined as compounding in *USP*), refer to *USP General Notices and Requirements* and the following general chapters:

- *Containers—Glass* ⟨660⟩
- *Containers—Plastic* ⟨661⟩
- *Elastomeric Closures for Injections* ⟨381⟩
- *Good Packaging Practices* ⟨1177⟩
- *Good Repackaging Practices* ⟨1178⟩
- *Good Storage and Shipping Practices* ⟨1079⟩
- *Injections* ⟨1⟩

Accessed from 167.78.4.19 by James Cumbie (ocean22) on Mon Sep 09 15:04:23 EDT 2013

- *Packaging and Repackaging—Single-Unit Containers* ⟨1136⟩
- *Pharmaceutical Dosage Forms* ⟨1151⟩

OUTSOURCING

NOTE: This section addresses only the purchasing or selling of compounded preparations from pharmacy to pharmacy, not the outsourcing of analytical testing of compounded preparations.

For pharmacies that prepare outsourced compounded preparations or repackaged commercial products, documentation of beyond-use dating, as defined previously in the *Documentation* section of this chapter, is required and shall be provided upon request. In addition, documentation of compliance with *USP* chapters ⟨795⟩ and ⟨797⟩ is required and shall be provided upon request.

For facilities that receive outsourced compounded preparations or repackaged commercial products, documentation shall be on file for all BUDs assigned to those preparations or products.

RESPONSIBLE PERSONNEL

The responsibility and authority for a quality assurance program should be clearly defined and implemented. Personnel responsible for the quality assurance program should have the education, training, and experience necessary to perform the assigned functions. Quality assurance personnel should assure that documentation, verification, and testing are performed in accordance with written policies and procedures. If deviations from approved policies and procedures occur, it is the responsibility of the quality assurance personnel to investigate and to implement appropriate corrective action. Documentation of any investigations and corrective actions is the responsibility of the quality assurance personnel. Responsible personnel in the quality assurance program are essential in assuring the safety, identity, strength, quality, and purity of compounded drug preparations.

SUMMARY

A quality assurance program is necessary to ensure the quality of compounded preparations. A sound quality assurance program includes detailed SOPs, documentation, verification, analytical and microbiological testing as appropriate to particular compounded preparations, and responsible quality assurance personnel. Compounding professionals must determine the types of testing and degree of testing that will be a part of their quality assurance program. They also must decide whether to perform testing in-house or outsource it to a contract laboratory.

⟨1176⟩ PRESCRIPTION BALANCES AND VOLUMETRIC APPARATUS

Prescription Balances

NOTE—Balances other than the type described herein may be used if these afford equivalent or better accuracy. This includes micro-, semimicro-, or electronic single-pan balances (see *Weights and Balances* ⟨41⟩). Some balances offer digital or direct-reading features. All balances should be calibrated and tested frequently using appropriate test weights, both singly and in combination.

Description—A prescription balance is a scale or balance adapted to weighing medicinal and other substances required in prescriptions or in other pharmaceutical compounding. It is constructed so as to support its full capacity without developing undue stresses, and its adjustment is not altered by repeated weighings of the capacity load. The removable pans or weighing vessels should be of equal weight. The balance should have leveling feet or screws. The balance may feature dial-in weights and also a precision spring and dial instead of a weighbeam. A balance that has a graduated weighbeam must have a stop that halts the rider or poise at the zero reading. The reading edge of the rider is parallel to the graduations on the weighbeam. The distance from the face of the index plate to the indicator pointer or pointers should be not more than 1.0 mm, the points should be sharp, and when there are two, their ends should be separated by not more than 1.0 mm when the scale is in balance. The indicating elements and the lever system should be protected against drafts, and the balance lid should permit free movement of the loaded weighing pans when the lid is closed. The balance must have a mechanical arresting device.

Definitions—

Capacity—Maximum weight, including the weight of tares, to be placed on one pan. The *N.B.S. Handbook 44*, 4th ed., states: "*In the absence of information to the contrary*, the nominal capacity of a Class A balance shall be assumed to be 15.5 g ($^1/_2$ apothecaries' ounce)." Most of the commercially available Class A balances have a capacity of 120 g and bear a statement to that effect.

Weighbeam or Beam—A graduated bar equipped with a movable poise or rider. Metric graduations are in 0.01-g increments up to a maximum of 1.0 g.

Tare Bar—An auxiliary ungraduated weighbeam bar with a movable poise. It can be used to correct for variations in weighing glasses or papers.

Copyright (c) 2013 The United States Pharmacopeial Convention. All rights reserved.

Balance Indicator—A combination of elements, one or both of which will oscillate with respect to the other, to indicate the equilibrium state of the balance during weighing.

Rest Point—The point on the index plate at which the indicator or pointer stops when the oscillations of the balance cease; or the index plate position of the indicator or pointer calculated from recorded consecutive oscillations in both directions past the zero of the index plate scale. If the balance has a two-pointer indicating mechanism, the position or the oscillations of only one of the pointers need be recorded or used to determine the rest point.

Sensitivity Requirements (*SR*)—The maximum change in load that will cause a specified change, one subdivision on the index plate, in the position of rest of the indicating element or elements of the balance.

Class A Prescription Balance—A balance that meets the tests for this type of balance has a sensitivity requirement of 6 mg or less with no load and with a load of 10 g on each pan. The Class A balance should be used for all the weighing operations required in prescription compounding.

In order to avoid errors of 5% or more that might be due to the limit of sensitivity of the Class A prescription balance, do not weigh less than 120 mg of any material. If a smaller weight of dry material is required, mix a larger known weight of the ingredient with a known weight of dry diluent, and weigh an aliquot portion of the mixture for use.

Testing the Prescription Balance—A Class A prescription balance meets the following four basic tests. Use a set of test weights, and keep the rider on the weighbeam at zero unless directed to change its position.

1. *Sensitivity Requirement*—Level the balance, determine the rest point, and place a 6-mg weight on one of the empty pans. Repeat the operation with a 10-g weight in the center of each pan. The rest point is shifted not less than one division on the index plate each time the 6-mg weight is added.

2. *Arm Ratio Test*—This test is designed to check the equality of length of both arms of the balance. Determine the rest point of the balance with no weight on the pans. Place in the center of each pan a 30-g test weight, and determine the rest point. If the second rest point is not the same as the first, place a 20-mg weight on the lighter side; the rest point should move back to the original place on the index plate scale or farther.

3. *Shift Tests*—These tests are designed to check the arm and lever components of the balance.

A. Determine the rest point of the indicator without any weights on the pans.

B. Place one of the 10-g weights in the center of the left pan, and place the other 10-g weight successively toward the right, left, front, and back of the right pan, noting the rest point in each case. If in any case the rest point differs from the rest point determined in Step A, add a 10-mg weight to the lighter side; this should cause the rest point to shift back to the rest point determined in Step A or farther.

C. Place a 10-g weight in the center of the right pan, and place a 10-g weight successively toward the right, left, front, and back of the left pan, noting the rest point in each case. If in any case the rest point is different from that obtained with no weights on the pans, this difference should be overcome by addition of the 10-mg weight to the lighter side.

D. Make a series of observations in which both weights are simultaneously shifted to off-center positions on their pans: both toward the outside, both toward the inside, one toward the outside and the other toward the inside, both toward the back, and so on until all combinations have been checked. If in any case the rest point differs from that obtained with no weights on the pan, the addition of the 10-mg weight to the lighter side should overcome this difference.

A balance that does not meet the requirements of these tests must be adjusted.

4. *Rider and Graduated Beam Tests*—Determine the rest point for the balance with no weight on the pans. Place on the left pan the 500-mg test weight, move the rider to the 500-mg point on the beam, and determine the rest point. If it is different from the zero rest point, add a 6-mg weight to the lighter side. This addition should bring the rest point back to its original position or farther. Repeat this test, using the 1-g test weight and moving the rider to the 1-g division on the beam. If the rest point is different, it should be brought back at least to the zero rest point position by the addition of 6 mg to the lighter pan. If the balance does not meet this test, the weighbeam graduations or the rider must be corrected.

Metric or apothecaries' weights for use with a prescription balance should be kept in a special rigid and compartmentalized box and handled with plastic or plastic-tipped forceps to prevent scratching or soiling. For prescription use, analytical weights (Class P or better) are recommended. However, Class Q weights have tolerances well within the limits of accuracy of the prescription balance, and they retain their accuracy for a long time with proper care. Coin-type (or disk-shaped) weights should not be used.

Test weights consisting of two 20-g or two 30-g, two 10-g, one 1-g, one 500-mg, one 20-mg, one 10-mg, and one 6-mg (or suitable combination totaling 6 mg) weights, adjusted to N.B.S. tolerances for analytical weights (Class P or better) should be used for testing the prescription balances. These weights should be kept in a tightly closed box and should be handled only with plastic or plastic-tipped forceps. The set of test weights should be used only for testing the balance or constantly used weights. If properly cared for, the set lasts indefinitely.

Volumetric Apparatus

Pharmaceutical devices for measuring volumes of liquids, including burets, pipets, and cylinders graduated either in metric or apothecary units meet the standard specifications for glass volumetric apparatus described in NTIS COM-73-10504 of the National Technical Information Service.[1] Conical graduates meet the standard specifications described in N.B.S. Handbook 44, 4th Edition, of the National Institute of Standards and Technology.[2] Graduated medicine droppers meet the specifications (see *Medicine Dropper*

[1] NTIS COM-73-10504 is for sale by the National Technical Information Service, Springfield, VA 22151.
[2] N.B.S. Handbook 44, 4th ed. (1971), is for sale by the Superintendent of Documents, U. S. Government Printing Office, Washington, DC 20402.

Accessed from 167.78.4.19 by James Cumbie (ocean22) on Mon Sep 09 15:04:23 EDT 2013

⟨1101⟩). An acceptable ungraduated medicine dropper has a delivery end 3 mm in external diameter and delivers 20 drops of water, weighing 1 g at a temperature of 15°. A tolerance of ±10% of the delivery specification is reasonable.

Selection and **Use of Graduates—**

Capacity—The capacity of a graduate is the designated volume, at the maximum graduation, that the graduate will contain, or deliver, as indicated, at the specified temperature.

Cylindrical and *Conical Graduates*—The error in a measured volume caused by a deviation of ±1 mm in reading the lower meniscus in a graduated cylinder remains constant along the height of the uniform column. The same deviation of ±1 mm causes a progressively larger error in a conical graduate, the extent of the error being further dependent upon the angle of the flared sides to the perpendicular of the upright graduate. A deviation of ±1 mm in the meniscus reading causes an error of approximately 0.5 mL in the measured volume at any mark on the uniform 100-mL cylinder graduate. The same deviation of ±1 mm can cause an error of 1.8 mL at the 100-mL mark on an acceptable conical graduate marked for 125 mL.

A general rule for selection of a graduate for use is to use the graduate with a capacity equal to or just exceeding the volume to be measured. Measurement of small volumes in large graduates tends to increase errors, because the larger diameter increases the volume error in a deviation of ±1 mm from the mark. The relation of the volume error to the internal diameters of graduated cylinders is based on the equation $V = \pi r^2 h$. An acceptable 10-mL cylinder having an internal diameter of 1.18 cm holds 109 µL in 1 mm of the column. Reading 4.5 mL in this graduate with a deviation of ±1 mm from the mark causes an error of about ±2.5%, and the same deviation in a volume of 2.2 mL in the same graduate causes an error of about ±5%. Minimum volumes that can be measured within certain limits of error in graduated cylinders of different capacities are incorporated in the design details of graduates in N.B.S. Handbook 44, 4th ed., of the National Institute of Standards and Technology. Conical graduates having a capacity of less than 25 mL should not be used in prescription compounding.

Copyright (c) 2013 The United States Pharmacopeial Convention. All rights reserved.

Accessed from 167.78.4.19 by James Cumbie (ocean22) on Mon Sep 09 15:04:23 EDT 2013

Section 3

⟨1⟩ INJECTIONS

INTRODUCTION

Parenteral articles are preparations intended for injection through the skin or other external boundary tissue, rather than through the alimentary canal, so that the active substances they contain are administered, using gravity or force, directly into a blood vessel, organ, tissue, or lesion. Parenteral articles are prepared scrupulously by methods designed to ensure that they meet Pharmacopeial requirements for sterility, pyrogens, particulate matter, and other contaminants, and, where appropriate, contain inhibitors of the growth of microorganisms. An Injection is a preparation intended for parenteral administration and/or for constituting or diluting a parenteral article prior to administration.

NOMENCLATURE AND DEFINITIONS

Nomenclature[1]

The following nomenclature pertains to five general types of preparations, all of which are suitable for, and intended for, parenteral administration. They may contain buffers, preservatives, or other added substances.

1. *[DRUG] Injection*—Liquid preparations that are drug substances or solutions thereof.
2. *[DRUG] for Injection*—Dry solids that, upon the addition of suitable vehicles, yield solutions conforming in all respects to the requirements for *Injections.*
3. *[DRUG] Injectable Emulsion*—Liquid preparations of drug substances dissolved or dispersed in a suitable emulsion medium.
4. *[DRUG] Injectable Suspension*—Liquid preparations of solids suspended in a suitable liquid medium.
5. *[DRUG] for Injectable Suspension*—Dry solids that, upon the addition of suitable vehicles, yield preparations conforming in all respects to the requirements for *Injectable Suspensions.*

Definitions

BIOLOGICS

The Pharmacopeial definitions for sterile preparations for parenteral use generally do not apply in the case of the biologics because of their special nature and licensing requirements (see *Biologics* ⟨1041⟩).

INGREDIENTS

Vehicles and Added Substances

Aqueous Vehicles—The vehicles for aqueous Injections meet the requirements of the *Pyrogen Test* ⟨151⟩ or the *Bacterial Endotoxins Test* ⟨85⟩, whichever is specified. *Water for Injection* generally is used as the vehicle, unless otherwise specified in the individual monograph. Sodium chloride may be added in amounts sufficient to render the resulting solution isotonic; and *Sodium Chloride Injection,* or *Ringer's Injection,* may be used in whole or in part instead of *Water for Injection,* unless otherwise specified in the individual monograph. For conditions applying to other adjuvants, see *Added Substances* in this chapter.

Other Vehicles—Fixed oils used as vehicles for nonaqueous Injections are of vegetable origin, are odorless or nearly so, and have no odor suggesting rancidity. They meet the requirements of the test for *Solid paraffin* in *Mineral Oil,* the cooling bath being

[1] This nomenclature has been adopted by the USP Drug Nomenclature Committee for implementation by supplemental revisions of *USP 34–NF 29*. For currently official monograph titles in the form *Sterile [DRUG]* that have not yet been revised, the following nomenclature continues in use in this Pharmacopeia: (1) medicaments or solutions or emulsions thereof suitable for injection, bearing titles of the form *[DRUG] Injection;* (2) dry solids or liquid concentrates containing no buffers, diluents, or other added substances, and which, upon the addition of suitable solvents, yield solutions conforming in all respects to the requirements for Injections, and which are distinguished by titles of the form *Sterile [DRUG];* (3) preparations the same as those described under (2) except that they contain one or more buffers, diluents, or other added substances, and which are distinguished by titles of the form *[DRUG] for Injection;* (4) solids which are suspended in a suitable fluid medium and which are not to be injected intravenously or into the spinal canal, distinguished by titles of the form *Sterile [DRUG] Suspension;* and (5) dry solids which, upon the addition of suitable vehicles, yield preparations conforming in all respects to the requirements for Sterile Suspensions, and which are distinguished by titles of the form *Sterile [DRUG] for Suspension.*

Copyright (c) 2013 The United States Pharmacopeial Convention. All rights reserved.

maintained at 10°, have a *Saponification Value* between 185 and 200 (see *Fats and Fixed Oils* ⟨401⟩), have an *Iodine Value* between 79 and 141 (see *Fats and Fixed Oils* ⟨401⟩), and meet the requirements of the following tests.

Unsaponifiable Matter (see *Fats and Fixed Oils* ⟨401⟩): not more than 1.5%.

Acid Value (see *Fats and Fixed Oils* ⟨401⟩): not more than 0.2.

Peroxide Value (see *Fats and Fixed Oils* ⟨401⟩): not more than 5.0.

Water, Method Ic ⟨921⟩*:* not more than 0.1%.

Limit of Copper, Iron, Lead, and Nickel—[NOTE—The test for nickel is not required if the oil has not been subjected to hydrogenation, or a nickel catalyst has not been used in processing.] Proceed as directed in the section *Trace Metals* in *Fats and Fixed Oils* ⟨401⟩. Not more than 1 ppm of copper is found; not more than 1 ppm of iron is found; not more than 1 ppm of lead is found; and not more than 1 ppm of nickel is found.

Synthetic mono- or diglycerides of fatty acids may be used as vehicles, provided they are liquid and remain clear when cooled to 10° and have an *Iodine Value* of not more than 140 (see *Fats and Fixed Oils* ⟨401⟩).

These and other nonaqueous vehicles may be used, provided they are safe, in the volume of Injection administered, and also provided they do not interfere with the therapeutic efficacy of the preparation or with its response to prescribed assays and tests.

Added Substances—Suitable substances may be added to preparations intended for injection to increase stability or usefulness, unless proscribed in the individual monograph, provided they are harmless in the amounts administered and do not interfere with the therapeutic efficacy or with the responses to the specified assays and tests. No coloring agent may be added, solely for the purpose of coloring the finished preparation, to a solution intended for parenteral administration (see also *Added Substances* in *General Notices* and *Antimicrobial Effectiveness Testing* ⟨51⟩).

Observe special care in the choice and use of added substances in preparations for injection that are administered in a volume exceeding 5 mL. The following maximum limits prevail unless otherwise directed: for agents containing mercury and the cationic, surface-active compounds, 0.01%; for chlorobutanol, cresol, phenol, and similar types of substances, 0.5%; and for sulfur dioxide, or an equivalent amount of the sulfite, bisulfite, or metabisulfite of potassium or sodium, 0.2%.

A suitable substance or mixture of substances to prevent the growth of microorganisms must be added to preparations intended for injection that are packaged in multiple-dose containers, regardless of the method of sterilization used, unless one of the following conditions prevails: (1) there are different directions in the individual monograph; (2) the substance contains a radionuclide with a physical half-life of less than 24 hours; and (3) the active ingredients are themselves antimicrobial. Such substances are used in concentrations that will prevent the growth of or kill microorganisms in the preparations for injection. Such substances also meet the requirements of *Antimicrobial Effectiveness Testing* ⟨51⟩ and *Antimicrobial Agents—Content* ⟨341⟩. Sterilization processes are used even though such substances are used (see also *Sterilization and Sterility Assurance of Compendial Articles* ⟨1211⟩). The air in the container may be evacuated or be displaced by a chemically inert gas. Where specified in a monograph, information regarding sensitivity of the article to oxygen is to be provided in the labeling.

LABELS AND LABELING

Labeling

NOTE—See definitions of "label" and "labeling" in section 10.40 *Labeling* under section 10. *Preservation, Packaging, Storage, and Labeling* of the *General Notices and Requirements.*

The label states the name of the preparation; in the case of a liquid preparation, the percentage content of drug or amount of drug in a specified volume; in the case of a dry preparation, the amount of *active* ingredient; the route of administration; a statement of storage conditions and an expiration date; the name and place of business of the manufacturer, packer, or distributor; and an identifying lot number. The lot number is capable of yielding the complete manufacturing history of the specific package, including all manufacturing, filling, sterilizing, and labeling operations.

Where the individual monograph permits varying concentrations of active ingredients in the large-volume parenteral, the concentration of each ingredient named in the official title is stated as if part of the official title, e.g., Dextrose Injection 5%, or Dextrose (5%) and Sodium Chloride (0.2%) Injection.

The labeling includes the following information if the complete formula is not specified in the individual monograph: (1) In the case of a liquid preparation, the percentage content of each ingredient or the amount of each ingredient in a specified volume, except that ingredients added to adjust to a given pH or to make the solution isotonic may be declared by name and a statement of their effect; and (2) in the case of a dry preparation or other preparation to which a diluent is intended to be added before use, the amount of each ingredient, the composition of recommended diluent(s) [the name(s) alone, if the formula is specified in the individual monograph], the amount to be used to attain a specific concentration of active ingredient and the final volume of solution so obtained, a brief description of the physical appearance of the constituted solution, directions for proper storage of the constituted solution, and an expiration date limiting the period during which the constituted solution may be expected to have the required or labeled potency if it has been stored as directed.

Containers for Injections that are intended for use as dialysis, hemofiltration, or irrigation solutions and that contain a volume of more than 1 L are labeled to indicate that the contents are not intended for use by intravenous infusion.

Injections intended for veterinary use are labeled to that effect.

The container is so labeled that a sufficient area of the container remains uncovered for its full length or circumference to permit inspection of the contents.

Accessed from 167.78.4.19 by James Cumbie (ocean22) on Mon Sep 09 15:04:23 EDT 2013

STRENGTH AND TOTAL VOLUME FOR SINGLE- AND MULTIPLE-DOSE INJECTABLE DRUG PRODUCTS

For single-dose and multiple-dose injectable drug products, the strength per total volume should be the primary and prominent expression on the principal display panel of the label, followed in close proximity by strength per mL enclosed by parentheses. For containers holding a volume of less than 1 mL, the strength per fraction of a mL should be the only expression of strength. Strength per single mL should be expressed as mg/mL, not mg/1 mL.

The following formats are acceptable for contents of greater than 1 mL:
Total strength/total volume: 500 mg/10 mL
Strength/mL: 50 mg/mL
or
Total strength/total volume: 25,000 Units/5 mL
Strength/mL: 5,000 Units/mL
The following format is acceptable for contents of less than 1 mL: 12.5 mg/0.625 mL

There are, however, some exceptions to expressing strength per total volume. In certain cases, the primary and prominent expression of the total drug content per container would not be effective in preventing medication errors (e.g., insulin). An example is the use of lidocaine or other similar drugs used as a local anesthetic where the product is ordered and administered by percentage (e.g., 1%, 2%) or a local anesthetic in combination with epinephrine that is expressed as a ratio (e.g., 1:100,000). In such cases, the total strength should be expressed: for example, 1% (100 mg/10 mL). Dry solids, which need to be reconstituted, should follow the same format, with the exception that only the total strength of the drug should be listed, not the strength/total volume or strength/mL.

Aluminum in Large-Volume Parenterals (LVPs), Small-Volume Parenterals (SVPs), and Pharmacy Bulk Packages (PBPs) Used in Total Parenteral Nutrition (TPN) Therapy

(a) The aluminum content of LVPs used in TPN therapy must not exceed 25 µg per L (µg/L).
(b) The package insert of LVPs used in TPN therapy must state that the drug product contains no more than 25 µg of aluminum per L. This information must be contained in the "Precautions" section of the labeling of all LVPs used in TPN therapy.
(c) If the maximum amount of aluminum in SVPs and PBPs is 25 µg per L (µg/L) or less, instead of stating the exact amount of aluminum that each contains, as in paragraph (d), the immediate container label for SVPs and PBPs used in the preparation of TPN parenterals (with exceptions as noted below) may state: "Contains no more than 25 µg/L of aluminum". If the SVP or PBP is a lyophilized powder, the immediate container label may state the following: "When reconstituted in accordance with the package insert instructions, the concentration of aluminum will be no more than 25 µg/L".
(d) The maximum level of aluminum at expiry must be stated on the immediate container label of all SVPs and PBPs used in the preparation of TPN parenterals and injectable emulsions. The aluminum content must be stated as follows: "Contains no more than __ µg/L of aluminum". The immediate container label of all SVPs and PBPs that are lyophilized powder used in the preparation of TPN solutions must contain the following statement: "When reconstituted in accordance with the package insert instructions, the concentration of aluminum will be no more than __ µg/L." This maximum amount of aluminum must be stated as the highest one of the following three levels:
(1) The highest level for the batches produced during the last three years
(2) The highest level for the latest five batches
(3) The maximum level in terms of historical levels, but only until completion of production of the first five batches after July 26, 2004.

The package insert for all LVPs, SVPs, and PBPs used in the preparation of TPN products must contain a warning statement. This warning must be contained in the "Warning" section of the labeling and must state the following: "WARNING: This product contains aluminum that may be toxic. Aluminum may reach toxic levels with prolonged parenteral administration if kidney function is impaired. Premature neonates are particularly at risk because their kidneys are immature, and they require large amounts of calcium and phosphate solutions that contain aluminum. Research indicates that patients with impaired kidney function, including premature neonates, who receive parenteral levels of aluminum at greater than 4 to 5 µg per kg per day accumulate aluminum at levels associated with central nervous system and bone toxicity. Tissue loading may occur at even lower rates of administration of TPN products."

PACKAGING

Containers for Injections

Containers, including the closures, for preparations for injections do not interact physically or chemically with the preparations in any manner to alter the strength, quality, or purity beyond the official requirements under the ordinary or customary conditions of handling, shipment, storage, sale, and use. The container is made of material that permits inspection of the contents. The type of glass preferable for each parenteral preparation is usually stated in the individual monograph. Unless otherwise specified in the individual monograph, plastic containers may be used for packaging injections (see *Containers—Plastics* ⟨661⟩).

For definitions of single-dose and multiple-dose containers, see sections 10.20.70 and 10.20.110, respectively, in the *General Notices and Requirements.* Containers meet the requirements in *Containers—Glass* ⟨660⟩ and *Containers—Plastics* ⟨661⟩.

Containers are closed or sealed in such a manner as to prevent contamination or loss of contents. Validation of container integrity must demonstrate no penetration of microbial contamination or chemical or physical impurities. In addition, the solutes and the

Copyright (c) 2013 The United States Pharmacopeial Convention. All rights reserved.

vehicle must maintain their specified total and relative quantities or concentrations when exposed to anticipated extreme conditions of manufacturing and processing, and storage, shipment, and distribution. Closures for multiple-dose containers permit the withdrawal of the contents without removal or destruction of the closure. The closure permits penetration by a needle and, upon withdrawal of the needle, closes at once, protecting the container against contamination. Validation of the multiple-dose container integrity must include verification that such a package prevents microbial contamination or loss of product contents under anticipated conditions of multiple entry and use.

Piggyback containers are usually intravenous infusion containers used to administer a second infusion through a connector of some type or an injection port on the administration set of the first fluid, thereby avoiding the need for another injection site on the patient's body. Piggyback containers are also known as secondary infusion containers.

Potassium Chloride for Injection Concentrate

The use of a black closure system on a vial (e.g., a black flip-off button and a black ferrule to hold the elastomeric closure) or the use of a black band or series of bands above the constriction on an ampul is prohibited, except for *Potassium Chloride for Injection Concentrate.*

Neuromuscular Blocking and Paralyzing Agents

All injectable preparations of neuromuscular blocking agents and paralyzing agents must be packaged in vials with a cautionary statement printed on the ferrules or cap overseals. Both the container cap ferrule and the cap overseal must bear in black or white print (whichever provides the greatest color contrast with the ferrule or cap color) the words: "Warning: Paralyzing Agent" or "Paralyzing Agent" (depending on the size of the closure system). Alternatively, the overseal may be transparent and without words, allowing for visualization of the warning labeling on the closure ferrule.

Containers for Sterile Solids

Containers, including the closures, for dry solids intended for parenteral use do not interact physically or chemically with the preparation in any manner to alter the strength, quality, or purity beyond the official requirements under the ordinary or customary conditions of handling, shipment, storage, sale, and use.

A container for a sterile solid permits the addition of a suitable solvent and withdrawal of portions of the resulting solution or suspension in such manner that the sterility of the product is maintained.

Where the *Assay* in a monograph provides a procedure for the *Sample solution,* in which the total withdrawable contents are to be withdrawn from a single-dose container with a hypodermic needle and syringe, the contents are to be withdrawn as completely as possible into a dry hypodermic syringe of a rated capacity not exceeding three times the volume to be withdrawn and fitted with a 21-gauge needle not less than 2.5 cm (1 inch) in length, with care being taken to expel any air bubbles, and discharged into a container for dilution and assay.

Container Content

Each container of an injection contains sufficient excess to allow withdrawal of the labeled quantity of drug. Such withdrawal shall be performed according to labeled directions, if provided.

DETERMINATION OF VOLUME OF INJECTION IN CONTAINERS

This section is harmonized with the corresponding texts of the *European Pharmacopoeia* and/or the *Japanese Pharmacopoeia.* These pharmacopeias have undertaken not to make any unilateral change to this harmonized section. A portion of the present text (see below) is national *USP* text, and therefore not part of the harmonized text; it is marked with symbols (◆◆) to specify this fact.

Suspensions and emulsions must be shaken before withdrawal of the contents and before the determination of the density. Oily and viscous preparations may be warmed according to the instructions on the label, if necessary, and thoroughly shaken immediately before removing the contents. The contents are then cooled to 20°–25°C before measuring the volume. ◆Sterile solid formulations must be constituted according to labeled directions before removing the contents. Contents are then to be measured following the procedures for suspensions, emulsions, or solutions, as appropriate.◆

Single-Dose Containers—Select 1 container if the volume of the container is 10 mL or more, 3 containers if the nominal volume is more than 3 mL and less than 10 mL, or 5 containers if the nominal volume is 3 mL or less. Take up individually the total contents of each container selected into a dry syringe of a capacity not exceeding three times the volume to be measured and fitted with a 21-gauge needle not less than 2.5 cm (1 inch) in length. Expel any air bubbles from the syringe and needle, and then discharge the contents of the syringe, without emptying the needle, into a standardized, dry cylinder (graduated to contain rather than to deliver the designated volumes) of such size that the volume to be measured occupies at least 40% of its graduated volume. Alternatively, the volume of the contents in mL may be calculated as the mass, in g, divided by the density. For containers with a nominal volume of 2 mL or less, the contents of a sufficient number of containers may be pooled to obtain the volume required for the measurement, provided that a separate, dry syringe assembly is used for each container. The contents of containers holding 10 mL or more may be determined by means of opening them and emptying the contents directly into the graduated cylinder or tared beaker.

The volume is not less than the nominal volume in the case of containers examined individually or, in the case of containers with a nominal volume of 2 mL or less, is not less than the sum of the nominal volumes of the containers taken collectively.

Accessed from 167.78.4.19 by James Cumbie (ocean22) on Mon Sep 09 15:04:23 EDT 2013

Multi-Dose Containers—For Injections in multiple-dose containers labeled to yield a specific number of doses of a stated volume, select 1 container, and proceed as directed for single-dose containers, using the same number of separate syringe assemblies as the number of doses specified. The volume is such that each syringe delivers not less than the stated dose.

Injections in Cartridges or Prefilled Syringes—Select 1 container if the volume is 10 mL or more, 3 containers if the nominal volume is more than 3 mL and less than 10 mL, or 5 containers if the nominal volume is 3 mL or less. If necessary, fit the containers with the accessories required for their use (needle, piston, syringe) and transfer the entire contents of each container without emptying the needle into a dry tared beaker by slowly and constantly depressing the piston. Determine the volume in mL, calculated as the mass, in g, divided by the density.

The volume measured for each of the containers is not less than the nominal volume.

Large-Volume Intravenous Solutions—For intravenous solutions, select 1 container. Transfer the contents into a dry measuring cylinder of such a capacity that the volume to be determined occupies at least 40% of the nominal volume of the cylinder. Measure the volume transferred.

The volume is not less than the nominal volume.

Labeling on Ferrules and Cap Overseals

Healthcare practitioners using injectable products must be able to easily see and act on labeling statements that convey important safety messages critical for the prevention of imminent life-threatening situations. These cautionary labeling statements must be simple, concise, and devoid of nonessential information. Products that do not require cautionary statements should be free of information, so that those with cautionary statements are immediately apparent. Accomplishing this requires a systematic approach to labeling of injectable products, and one that assures that the ferrule and cap overseal—an area of these products that is highly visible to practitioners as they use these medicines—is reserved for critical safety messages. Accordingly:

1. Only cautionary statements may appear on the top (circle) surface of the ferrule and/or cap overseal of a vial containing an injectable product. The cautionary statement should appear on both the ferrule and cap but may appear solely on the ferrule if the cap overseal is transparent and the cautionary statement beneath the cap is readily legible. A cautionary statement is one intended to prevent an imminent life-threatening situation and may include instructional statements that provide potency or other safety-related instructions if warranted. Examples of such statements include but are not limited to: "Warning—Paralyzing Agent" and "Dilute Before Using." The cautionary statement should be printed in a contrasting color and clearly visible under ordinary conditions of use.
2. If no cautionary statement is necessary, the top surface of the vial, including the ferrule and cap overseal, must remain blank.
3. Other statements or features including but not limited to identifying numbers or letters, such as code numbers, lot numbers, company names, logos, or product names, etc., may appear on the side (skirt) surface of the ferrule on vials containing injectable products but not on the top (circle) surface of the ferrule or cap overseal. The appearance of such statements or features on the skirt surface of the ferrule should not detract from, or interfere with, the cautionary statement on the top surface.

Official December 1, 2013

Packaging and Storage

The volume of injection in single-dose containers provides the amount specified for parenteral administration at one time and in no case is more than sufficient to permit the withdrawal and administration of 1 L.

Preparations intended for intraspinal, intracisternal, or peridural administration are packaged only in single-dose containers.

Unless otherwise specified in the individual monograph, a multiple-dose container contains a volume of Injection sufficient to permit the withdrawal of not more than 30 mL.

The following injections are exempt from the 1-L restriction of the foregoing requirements relating to packaging:

1. Injections packaged for extravascular use as irrigation solutions or peritoneal dialysis solutions
2. Injections packaged for intravascular use as parenteral nutrition or as replacement or substitution fluid to be administered continuously during hemofiltration

Injections packaged for intravascular use that may be used for intermittent, continuous, or bolus replacement fluid administration during hemodialysis or other procedures, unless excepted above, must conform to the 1-L restriction.

Injections labeled for veterinary use are exempt from packaging and storage requirements concerning the limitation to single-dose containers and the limitation on the volume of multiple-dose containers.

Change to read:

FOREIGN AND PARTICULATE MATTER

• Articles intended for parenteral administration shall be prepared in a manner designed to exclude particulate matter as defined in *Particulate Matter in Injections* ⟨788⟩ and other foreign matter as appropriate for the dosage form.• *USP36* Each final container of all parenteral preparations shall be inspected to the extent possible for the presence of observable foreign and particulate matter (hereafter termed "visible particulates") in its contents. The inspection process shall be designed and qualified to ensure that every lot of all parenteral preparations is essentially free from visible particulates. Qualification of the inspection process shall be

Copyright (c) 2013 The United States Pharmacopeial Convention. All rights reserved.

performed with reference to particulates in the visible range of a type that might emanate from the manufacturing or filling process. Every container whose contents show evidence of visible particulates shall be rejected. The inspection for visible particulates may take place when inspecting for other critical defects, such as cracked or defective containers or seals, or when characterizing the appearance of a lyophilized product.

Where the nature of the contents or the container–closure system permits only limited capability for the inspection of the total contents, the 100% inspection of a lot shall be supplemented with the inspection of constituted (e.g., dried) or withdrawn (e.g., dark amber container) contents of a sample of containers from the lot.

All large-volume Injections for single-dose infusion and small-volume Injections are subject to the light obscuration or microscopic procedures and limits for subvisible particulate matter set forth in *Particulate Matter In Injections* ⟨788⟩, unless otherwise specified in the individual monograph. An article packaged as both a large-volume and a small-volume Injection meets the requirements set forth for small-volume Injections where the container is labeled as containing 100 mL or less, if the individual monograph states a test for *Particulate Matter in Injections* ⟨788⟩; it meets the requirements set forth for large-volume Injections for single-dose infusion where the container is labeled as containing more than 100 mL.

• USP36

STERILITY

Sterility Tests—Preparations for injection meet the requirements in *Sterility Tests* ⟨71⟩.

CONSTITUTED SOLUTIONS

Dry solids from which constituted solutions are prepared for injection bear titles of the form *[DRUG] for Injection.* Because these dosage forms are constituted at the time of use by the healthcare practitioner, tests and standards pertaining to the solution as constituted for administration are not included in the individual monographs on sterile dry solids or liquid concentrates. However, in the interest of assuring the quality of injection preparations as they are actually administered, the following nondestructive tests are provided for demonstrating the suitability of constituted solutions when they are prepared just prior to use.

Completeness and Clarity of Solution—Constitute the solution as directed in the labeling supplied by the manufacturer for the sterile dry dosage form.

A: The solid dissolves completely, leaving no visible residue as undissolved matter.

B: The constituted solution is not significantly less clear than an equal volume of the diluent or of Purified Water contained in a similar vessel and examined similarly.

Particulate Matter—Constitute the solution as directed in the labeling supplied by the manufacturer for the sterile dry dosage form: the solution is essentially free from particles of foreign matter that can be observed on visual inspection.

Add the following:

⟨17⟩ PRESCRIPTION CONTAINER LABELING

INTRODUCTION

Medication misuse has resulted in more than 1 million adverse drug events per year in the United States. Patients' best source (and often only source) of information regarding the medications they have been prescribed is on the prescription container label. Although other written information and oral counseling sometimes may be available, the prescription container label must fulfill the professional obligations of the prescriber and pharmacist. These obligations include giving the patient the most essential information needed to understand how to safely and appropriately use the medication and to adhere to the prescribed medication regimen.

Inadequate understanding of prescription directions for use and auxiliary information on dispensed containers is widespread. Studies have found that 46% of patients misunderstood one or more dosage instructions, and 56% misunderstood one or more auxiliary warnings. The problem of misunderstanding is particularly troublesome in patients with low or marginal literacy and in patients receiving multiple medications that are scheduled for administration using unnecessarily complex, nonstandardized time periods. In one study, patients with low literacy were 34 times more likely to misinterpret prescription medication warning labels. However, even patients with adequate literacy often misunderstand common prescription directions and warnings. In addition, there is great variability in the actual auxiliary warning and supplemental instructional information applied by individual practitioners to the same prescription. The specific evidence to support a given auxiliary statement often is unclear, and patients often ignore such information. The essential need for, and benefit of, auxiliary label information (both text and icons) in improving patient understanding about safe and appropriate use of their medications vs. explicit simplified language alone require further study.

Accessed from 167.78.4.19 by James Cumbie (ocean22) on Mon Sep 09 15:04:23 EDT 2013

Lack of universal standards for labeling on dispensed prescription containers is a root cause for patient misunderstanding, nonadherence, and medication errors. On May 18, 2007, the USP Safe Medication Use Expert Committee established an Advisory Panel to: 1) determine optimal prescription label content and format to promote safe medication use by critically reviewing factors that promote or distract from patient understanding of prescription medication instructions and 2) create universal prescription label standards for format/appearance and content/language.

In November 2009, the Health Literacy and Prescription Container Labeling Advisory Panel presented its recommendations to the Safe Medication Use Expert Committee, which then requested that USP develop patient-centered label standards for the format, appearance, content, and language of prescription medication instructions to promote patient understanding. These recommendations form the basis of this general chapter.

Note—These standards do not apply when a prescription drug will be administered to a patient by licensed personnel who are acting within their scope of practice.

PRESCRIPTION CONTAINER LABEL STANDARDS TO PROMOTE PATIENT UNDERSTANDING

Organize the prescription label in a patient-centered manner: Information shall be organized in a way that best reflects how most patients seek out and understand medication instructions. Prescription container labeling should feature only the most important patient information needed for safe and effective understanding and use.

Emphasize instructions and other information important to patients: Prominently display information that is critical for patients' safe and effective use of the medicine. At the top of the label specify the patient's name, drug name (spell out full generic and brand name) and strength, and explicit clear directions for use in simple language.

The prescription directions should follow a standard format so the patient can expect that each element will be in a regimented order each time a prescription is received.

Other less critical but important content (e.g., pharmacy name and phone number, prescriber name, fill date, refill information, expiration date, prescription number, drug quantity, physical description, and evidence-based auxiliary information) should not supersede critical patient information. Such less critical information should be placed away from dosing instructions (e.g., at the bottom of the label or in another less prominent location) because it distracts patients, which can impair their recognition and understanding.

Simplify language: Language on the label should be clear, simplified, concise, and familiar, and should be used in a standardized manner. Only common terms and sentences should be used. Do not use unfamiliar words (including Latin terms) or medical jargon.

Use of readability formulas and software is not recommended to simplify short excerpts of text like those on prescription labels. Instead, use simplified, standardized sentences that have been developed to ensure ease of understanding the instructions correctly (by seeking feedback from samples of diverse consumers).

Give explicit instructions: Instructions for use (i.e., the SIG or signatur) should clearly separate the dose itself from the timing of each dose in order to explicitly convey the number of dosage units to be taken and when (e.g., specific time periods each day such as morning, noon, evening, and bedtime). Instructions shall include specifics on time periods. Do not use alphabetic characters for numbers. For example, write "Take 2 tablets in the morning and 2 tablets in the evening" rather than "Take two tablets twice daily").

Whenever available, use standardized directions (e.g., write "Take 1 tablet in the morning and 1 tablet in the evening" if the prescription reads b.i.d.). Vague instructions based on dosing intervals such as twice daily or 3 times daily, or hourly intervals such as every 12 hours, generally should be avoided because such instructions are implicit rather than explicit, they may involve numeracy skills, and patient interpretation may vary from prescriber intent. Although instructions that use specific hourly times (e.g., 8 a.m. and 10 p.m.) may seem to be more easily understood than implicit vague instructions, recommending dosing by precise hours of the day is less readily understood and may present greater adherence issues due to individual lifestyle patterns, e.g., shift work, than more general time frames such as in the morning, in the evening, after breakfast, with lunch, or at bedtime. Consistent use of the same terms should help avoid patient confusion.

Ambiguous directions such as "take as directed" should be avoided unless clear and unambiguous supplemental instructions and counseling are provided (e.g., directions for use that will not fit on the prescription container label). A clear statement referring the patient to such supplemental materials should be included on the container label.

Include purpose for use: If the purpose of the medication is included on the prescription, it should be included on the prescription container label unless the patient prefers that it not appear. Always ask patients their preference when prescriptions are submitted for filling. Confidentiality and FDA approval for intended use (e.g., labeled vs. off-label use) may limit inclusion of the purpose on labels. Current evidence supports inclusion of purpose-for-use language in clear, simple terms (e.g., "for high blood pressure" rather than "for hypertension").

Limit auxiliary information: Auxiliary information on the prescription container label should be evidence-based in simple explicit language that is minimized to avoid distracting patients with nonessential information. Most patients, particularly those with low literacy, pay little attention to auxiliary information. The information should be presented in a standardized manner and should be critical for patient understanding and safe medication use (e.g., warnings and critical administration alerts). Icons are frequently misunderstood by patients. In addition, icons that provide abstract imagery for messages that are difficult to visually depict may be ineffective at improving understanding compared with simplified text alone. Use only icons for which there is adequate evidence, through consumer testing, that they improve patient understanding about correct use. Evidence-based auxiliary information, both text and icons, should be standardized so that it is applied consistently and does not depend on individual practitioner choice.

Address limited English proficiency: Whenever possible, the directions for use on a prescription container label should be provided in the patient's preferred language. Otherwise there is a risk of misinterpretation of instructions by patients with limited

Copyright (c) 2013 The United States Pharmacopeial Convention. All rights reserved.

English proficiency, which could lead to medication errors and adverse health outcomes. Additionally, whenever possible, directions for use should appear in English as well, to facilitate counseling; the drug name shall be in English so that emergency personnel and other intermediaries can have quick access to the information.

Translations of prescription medication labels should be produced using a high-quality translation process. An example of a high-quality translation process is:

- Translation by a trained translator who is a native speaker of the target language
- Review of the translation by a second trained translator and reconciliation of any differences
- Review of the translation by a pharmacist who is a native speaker of the target language and reconciliation of any differences
- Testing of comprehension with target audience

If a high-quality translation process cannot be provided, labels should be printed in English and trained interpreter services used whenever possible to ensure patient comprehension. The use of computer-generated translations should be limited to programs with demonstrated quality because dosage instructions can be inconsistent and potentially hazardous. Standardized translated instructions and technology advances are needed to ensure the accuracy and safety of prescription container labeling for patients with low English proficiency.

Improve readability: Labels should be designed and formatted so they are easy to read. Currently no strong evidence supports the superiority in legibility of serif vs. sans serif typefaces, so simple uncondensed fonts of either type can be used.

Optimize typography by using the following techniques:

- High-contrast print (e.g., black print on white background).
- Simple, uncondensed familiar fonts with sufficient space within letters and between letters (e.g., Times Roman or Arial).
- Sentence case (i.e., punctuated like a sentence in English: initial capital followed by lower-case words except proper nouns).
- Large font size (e.g., minimum 12-point Times Roman or 11-point Arial) for critical information. Note that point size is not the actual size of the letter, so 2 fonts with the same nominal point size can have different actual letter sizes. X-height, the height of the lower-case x in typeface, has been used as a more accurate indicator of apparent size than point size. For example, for a given point size, the x-height and apparent size of Arial are actually bigger than those for Times Roman. Do not use type smaller than 10-point Times Roman or equivalent size of another font. Older adults, in particular, have difficulty reading small print.
- Adequate white space between lines of text (25%–30% of the point size).
- White space to distinguish sections on the label such as directions for use vs. pharmacy information.
- Horizontal text only.

Other measures that can also improve readability:

- If possible, minimize the need to turn the container in order to read lines of text.
- Never truncate or abbreviate critical information.
- Highlighting, bolding, and other typographical cues should preserve readability (e.g., high-contrast print and light color for highlighting) and should emphasize patient-centric information or information that facilitates adherence (e.g., refill ordering).
- Limit the number of colors used for highlighting (e.g., no more than one or two).
- Use of separate lines to distinguish when each dose should be taken.

Address visual impairment:

- Provide alternative access for visually impaired patients (e.g., tactile, auditory, or enhanced visual systems that may employ advanced mechanics of assistive technology).

• *USP36*

⟨31⟩ VOLUMETRIC APPARATUS

Most of the volumetric apparatus available in the United States is calibrated at 20°, although the temperatures generally prevailing in laboratories more nearly approach 25°. To minimize volumetric error, the temperature should be the same for the volumetric apparatus, the material being prepared, the solvents being used to prepare the volumetric solutions, the area in which they are prepared, and the final volume adjustment.

Use—To attain the degree of precision required in many Pharmacopeial assays involving volumetric measurements and directing that a quantity be "accurately measured," the apparatus must be chosen and used with care. A buret should be of such size that the titrant volume represents not less than 30% of the nominal volume. Where less than 10 mL of titrant is to be measured, a 10-mL buret or a microburet generally is required.

The design of volumetric apparatus is an important factor in assuring accuracy. For example, the length of the graduated portions of graduated cylinders should be not less than five times the inside diameter, and the tips of burets and pipets should restrict the outflow rate to not more than 500 µL per second.

Standards of Accuracy—The capacity tolerances for volumetric flasks, transfer pipets, and burets are those accepted by the National Institute of Standards and Technology (Class A),[1] as indicated in the accompanying tables. Use Class A volumetric apparatus unless otherwise specified in the individual monograph. For plastic volumetric apparatus the accepted capacity tolerances are Class B.[2]

The capacity tolerances for measuring (i.e., "graduated") pipets of up to and including 10-mL capacity are somewhat larger than those for the corresponding sizes of transfer pipets, namely, 10, 20, and 30 µL for the 2-, 5-, and 10-mL sizes, respectively.

[1] See ASTM 288-06, ASTM E287-02, ASTM E1189-00, and ASTM E969-02.
[2] See ASTM E 288, Fed. Spec. NNN-F-289, and ISO Standard 384.

Accessed from 167.78.4.19 by James Cumbie (ocean22) on Mon Sep 09 15:04:23 EDT 2013

Transfer and measuring pipets calibrated "to deliver" should be drained in a vertical position and then touched against the wall of the receiving vessel to drain the tips. Volume readings on burets should be estimated to the nearest 0.01 mL for 25- and 50-mL burets, and to the nearest 0.005 mL for 5- and 10-mL burets. Pipets calibrated "to contain" are called for in special cases, generally for measuring viscous fluids like syrups; however, a volumetric flask may be substituted for a "to contain" pipet. In such cases, the pipet or flask should be washed clean, after draining, and the washings added to the measured portion.

Volumetric Flasks

Designated volume, mL	10	25	50	100	250	500	1000
Limit of error, mL	0.02	0.03	0.05	0.08	0.12	0.20	0.30
Limit of error, %	0.20	0.12	0.10	0.08	0.05	0.04	0.03

Transfer Pipets

Designated volume, mL	1	2	5	10	25	50	100
Limit of error, mL	0.006	0.006	0.01	0.02	0.03	0.05	0.08
Limit of error, %	0.60	0.30	0.20	0.20	0.12	0.10	0.08

Burets

Designated volume, mL	10 ("micro" type)	25	50
Subdivisions, mL	0.02	0.1	0.1
Limit of error, mL	0.02	0.03	0.05

Change to read:

⟨41⟩ ▪BALANCES.▪2S (USP36)

Change to read:

▪This chapter states the requirements for balances used for materials that must be accurately weighed (see *General Notices*, *8.20*). Unless otherwise specified, when substances must be "accurately weighed", the weighing shall be performed using a balance that is calibrated over the operating range and meets the requirements defined for repeatability and accuracy. For balances used for other applications, the balance repeatability and accuracy should be commensurate with the requirements for its use.

For discussion of the theoretical basis of these requirements, see general information chapter *Weighing on an Analytical Balance* ⟨1251⟩, which may be a helpful—but not mandatory—resource.

REPEATABILITY

Repeatability is assessed by weighing one test weight NLT 10 times. [NOTE—The test weight must be within the balance's operating range, but the weight need not be calibrated. Because repeatability is virtually independent of sample mass within the balance's capacity, use of a small test weight, which may be difficult to handle, is not required.]

Repeatability is satisfactory if two times the standard deviation of the weighed value, divided by the nominal value of the weight used, does not exceed 0.10%. If the standard deviation obtained is less than 0.41*d*, where *d* is the scale interval, replace this standard deviation with 0.41*d*. In this case, repeatability is satisfactory if two times 0.41*d*, divided by the nominal value of the weight used, does not exceed 0.10%.

ACCURACY

The accuracy of a balance is satisfactory if its weighing value, when tested with a suitable weight(s), is within 0.10% of the test weight value.

A test weight is suitable if it has a mass between 5% and 100% of the balance's capacity. The test weight's maximum permissible error (mpe), or alternatively its calibration uncertainty, shall be NMT one-third of the applied test limit of the accuracy test. [NOTE—Applicable standards are the following: ASTM E617 (available from http://www.astm.org) and OIML R 111 (available from http://www.oiml.org).]▪2S (USP36)

Copyright (c) 2013 The United States Pharmacopeial Convention. All rights reserved.

⟨51⟩ ANTIMICROBIAL EFFECTIVENESS TESTING

Antimicrobial preservatives are substances added to nonsterile dosage forms to protect them from microbiological growth or from microorganisms that are introduced inadvertently during or subsequent to the manufacturing process. In the case of sterile articles packaged in multiple-dose containers, antimicrobial preservatives are added to inhibit the growth of microorganisms that may be introduced from repeatedly withdrawing individual doses.

Antimicrobial preservatives should not be used as a substitute for good manufacturing practices or solely to reduce the viable microbial population of a nonsterile product or control the presterilization bioburden of multidose formulations during manufacturing. Antimicrobial preservatives in compendial dosage forms meet the requirements for *Added Substances* under *Ingredients and Processes* in the *General Notices*.

All useful antimicrobial agents are toxic substances. For maximum protection of patients, the concentration of the preservative shown to be effective in the final packaged product should be below a level that may be toxic to human beings.

The concentration of an added antimicrobial preservative can be kept at a minimum if the active ingredients of the formulation possess an intrinsic antimicrobial activity. Antimicrobial effectiveness, whether inherent in the product or whether produced because of the addition of an antimicrobial preservative, must be demonstrated for all injections packaged in multiple-dose containers or for other products containing antimicrobial preservatives. Antimicrobial effectiveness must be demonstrated for multiple-dose topical and oral dosage forms and for other dosage forms such as ophthalmic, otic, nasal, irrigation, and dialysis fluids (see *Pharmaceutical Dosage Forms* ⟨1151⟩).

This chapter provides tests to demonstrate the effectiveness of antimicrobial protection. Added antimicrobial preservatives must be declared on the label. The tests and criteria for effectiveness apply to a product in the original, unopened container in which it was distributed by the manufacturer.

PRODUCT CATEGORIES

For the purpose of testing, compendial articles have been divided into four categories (see *Table 1*). The criteria of antimicrobial effectiveness for these products are a function of the route of administration.

Table 1. Compendial Product Categories

Category	Product Description
1	Injections, other parenterals including emulsions, otic products, sterile nasal products, and ophthalmic products made with aqueous bases or vehicles.
2	Topically used products made with aqueous bases or vehicles, nonsterile nasal products, and emulsions, including those applied to mucous membranes.
3	Oral products other than antacids, made with aqueous bases or vehicles.
4	Antacids made with an aqueous base.

TEST ORGANISMS

Use cultures of the following microorganisms[1]: *Candida albicans* (ATCC No. 10231), *Aspergillus niger* (ATCC No. 16404), *Escherichia coli* (ATCC No. 8739), *Pseudomonas aeruginosa* (ATCC No. 9027), and *Staphylococcus aureus* (ATCC No. 6538). The viable microorganisms used in the test must not be more than five passages removed from the original ATCC culture. For purposes of the test, one passage is defined as the transfer of organisms from an established culture to fresh medium. All transfers are counted. In the case of organisms maintained by seed-lot techniques, each cycle of freezing, thawing, and revival in fresh medium is taken as one transfer. A seed-stock technique should be used for long-term storage of cultures. Cultures received from the ATCC should be resuscitated according to directions. If grown in broth, the cells are pelleted by centrifugation. Resuspend in 1/20th the volume of fresh maintenance broth, and add an equal volume of 20% (v/v in water) sterile glycerol. Cells grown on agar may be scraped from the surface into the 10% glycerol broth. Dispense small aliquots of the suspension into sterile vials. Store the vials in liquid nitrogen or in a mechanical freezer at no more than −50°. When a fresh seed-stock vial is required, it may be removed and used to inoculate a series of working cultures. These working cultures may then be used periodically (each day in the case of bacteria and yeast) to start the inoculum culture.

[1] Available from American Type Culture Collection, 10801 University Boulevard, Manassas, VA 20110-2209 (http://www.atcc.org).

Accessed from 167.78.4.19 by James Cumbie (ocean22) on Mon Sep 09 15:04:23 EDT 2013

MEDIA

All media used in the test must be tested for growth promotion. Use the microorganisms indicated above under *Test Organisms.*

PREPARATION OF INOCULUM

Preparatory to the test, inoculate the surface of a suitable volume of solid agar medium from a recently revived stock culture of each of the specified microorganisms. The culture conditions for the inoculum culture are described in *Table 2* in which the suitable media are Soybean–Casein Digest or Sabouraud Dextrose Agar Medium (see *Microbial Enumeration Tests* ⟨61⟩ and *Tests for Specified Microorganisms* ⟨62⟩).

To harvest the bacterial and *C. albicans* cultures, use sterile saline TS, washing the surface growth, collecting it in a suitable vessel, and adding sufficient sterile saline TS to obtain a microbial count of about 1×10^8 colony-forming units (cfu) per mL. To harvest the cells of *A. niger*, use sterile saline TS containing 0.05% of polysorbate 80, and add sufficient sterile saline TS to obtain a count of about 1×10^8 cfu per mL.

Alternatively, the stock culture organisms may be grown in a suitable liquid medium (i.e., Soybean–Casein Digest Broth or Sabouraud Dextrose Broth) and the cells harvested by centrifugation, then washed and resuspended in sterile saline TS to obtain a microbial count of about 1×10^8 cfu per mL. [NOTE—The estimate of inoculum concentration may be performed by turbidimetric measurements for the challenge microorganisms. Refrigerate the suspension if it is not used within 2 hours.]

Determine the number of cfu per mL in each suspension, using the conditions of media and microbial recovery incubation times listed in *Table 2* to confirm the initial cfu per mL estimate. This value serves to calibrate the size of inoculum used in the test. The bacterial and yeast suspensions are to be used within 24 hours of harvest, but the fungal preparation may be stored under refrigeration for up to 7 days.

PROCEDURE

The test can be conducted either in five original containers if sufficient volume of product is available in each container and the product container can be entered aseptically (i.e., needle and syringe through an elastomeric rubber stopper), or in five sterile, capped bacteriological containers of suitable size into which a sufficient volume of product has been transferred. Inoculate each container with one of the prepared and standardized inoculum, and mix. The volume of the suspension inoculum used is between 0.5% and 1.0% of the volume of the product. The concentration of test microorganisms that is added to the product (*Categories 1, 2,* and *3*) are such that the final concentration of the test preparation after inoculation is between 1×10^5 and 1×10^6 cfu per mL of the product. For *Category 4* products (antacids) the final concentration of the test preparation after inoculation is between 1×10^3 and 1×10^4 cfu per mL of the product.

The initial concentration of viable microorganisms in each test preparation is estimated based on the concentration of microorganisms in each of the standardized inoculum as determined by the plate-count method.

Incubate the inoculated containers at 22.5 ± 2.5°. Sample each container at the appropriate intervals specified in *Table 3*. Record any changes observed in appearance at these intervals. Determine by the plate-count procedure the number of cfu present in each test preparation for the applicable intervals (see *Procedure* under *Microbial Enumeration Tests* ⟨61⟩ and *Tests for Specified Microorganisms* ⟨62⟩). Incorporate an inactivator (neutralizer) of the specific antimicrobial in the plate count or in the appropriate dilution prepared for plating. These conditions are determined in the validation study for that sample based upon the conditions of media and microbial recovery incubation times listed in *Table 2*. Using the calculated concentrations of cfu per mL present at the start of the test, calculate the change in $\log_{10}$ values of the concentration of cfu per mL for each microorganism at the applicable test intervals, and express the changes in terms of log reductions.

Table 2. Culture Conditions for Inoculum Preparation

Organism	Suitable Medium	Incubation Temperature	Inoculum Incubation Time	Microbial Recovery Incubation Time
Escherichia coli (ATCC No. 8739)	Soybean–Casein Digest Broth; Soybean–Casein Digest Agar	32.5 ± 2.5°	18 to 24 hours	3 to 5 days
Pseudomonas aeruginosa (ATCC No. 9027)	Soybean–Casein Digest Broth; Soybean–Casein Digest Agar	32.5 ± 2.5°	18 to 24 hours	3 to 5 days
Staphylococcus aureus (ATCC No. 6538)	Soybean–Casein Digest Broth; Soybean–Casein Digest Agar	32.5 ± 2.5°	18 to 24 hours	3 to 5 days
Candida albicans (ATCC No. 10231)	Sabouraud Dextrose Agar; Sabouraud Dextrose Broth	22.5 ± 2.5°	44 to 52 hours	3 to 5 days
Aspergillus niger (ATCC No. 16404)	Sabouraud Dextrose Agar; Sabouraud Dextrose Broth	22.5 ± 2.5°	6 to 10 days	3 to 7 days

CRITERIA FOR ANTIMICROBIAL EFFECTIVENESS

The requirements for antimicrobial effectiveness are met if the criteria specified under *Table 3* are met (see *Significant Figures and Tolerances* under *General Notices*). No increase is defined as not more than 0.5 $\log_{10}$ unit higher than the previous value measured.

Copyright (c) 2013 The United States Pharmacopeial Convention. All rights reserved.

Table 3. Criteria for Tested Microorganisms

For Category 1 Products	
Bacteria:	Not less than 1.0 log reduction from the initial calculated count at 7 days, not less than 3.0 log reduction from the initial count at 14 days, and no increase from the 14 days' count at 28 days.
Yeast and Molds:	No increase from the initial calculated count at 7, 14, and 28 days.
For Category 2 Products	
Bacteria:	Not less than 2.0 log reduction from the initial count at 14 days, and no increase from the 14 days' count at 28 days.
Yeast and Molds:	No increase from the initial calculated count at 14 and 28 days.
For Category 3 Products	
Bacteria:	Not less than 1.0 log reduction from the initial count at 14 days, and no increase from the 14 days' count at 28 days.
Yeast and Molds:	No increase from the initial calculated count at 14 and 28 days.
For Category 4 Products	
Bacteria, Yeast, and Molds:	No increase from the initial calculated count at 14 and 28 days.

⟨61⟩ MICROBIOLOGICAL EXAMINATION OF NONSTERILE PRODUCTS: MICROBIAL ENUMERATION TESTS

INTRODUCTION

The tests described hereafter will allow quantitative enumeration of mesophilic bacteria and fungi that may grow under aerobic conditions.

The tests are designed primarily to determine whether a substance or preparation complies with an established specification for microbiological quality. When used for such purposes, follow the instructions given below, including the number of samples to be taken, and interpret the results as stated below.

The methods are not applicable to products containing viable microorganisms as active ingredients.

Alternative microbiological procedures, including automated methods, may be used, provided that their equivalence to the Pharmacopeial method has been demonstrated.

GENERAL PROCEDURES

Carry out the determination under conditions designed to avoid extrinsic microbial contamination of the product to be examined. The precautions taken to avoid contamination must be such that they do not affect any microorganisms that are to be revealed in the test.

If the product to be examined has antimicrobial activity, this is, insofar as possible, removed or neutralized. If inactivators are used for this purpose, their efficacy and their absence of toxicity for microorganisms must be demonstrated.

If surface-active substances are used for sample preparation, their absence of toxicity for microorganisms and their compatibility with any inactivators used must be demonstrated.

ENUMERATION METHODS

Use the *Membrane Filtration* method or one of the *Plate-Count Methods,* as directed. The *Most-Probable-Number (MPN) Method* is generally the least accurate method for microbial counts; however, for certain product groups with very low bioburden, it may be the most appropriate method.

The choice of a method is based on factors such as the nature of the product and the required limit of microorganisms. The method chosen must allow testing of a sufficient sample size to judge compliance with the specification. The suitability of the chosen method must be established.

Accessed from 167.78.4.19 by James Cumbie (ocean22) on Mon Sep 09 15:04:23 EDT 2013

GROWTH PROMOTION TEST, SUITABILITY OF THE COUNTING METHOD AND NEGATIVE CONTROLS

General Considerations

The ability of the test to detect microorganisms in the presence of product to be tested must be established.

Suitability must be confirmed if a change in testing performance or a change in the product that may affect the outcome of the test, is introduced.

Preparation of Test Strains

Use standardized stable suspensions of test strains or prepare as stated below. Seed-lot culture maintenance techniques (seed-lot systems) are used so that the viable microorganisms used for inoculation are not more than five passages removed from the original master seed-lot. Grow each of the bacterial and fungal test strains separately as described in *Table 1*.

Use *Buffered Sodium Chloride–Peptone Solution pH 7.0* or *Phosphate Buffer Solution pH 7.2* to make test suspensions; to suspend *A. brasiliensis* spores, 0.05% of polysorbate 80 may be added to the buffer. Use the suspensions within 2 hours, or within 24 hours if stored between 2° and 8°. As an alternative to preparing and then diluting a fresh suspension of vegetative cells of *A. brasiliensis* or *B. subtilis,* a stable spore suspension is prepared and then an appropriate volume of the spore suspension is used for test inoculation. The stable spore suspension may be maintained at 2° to 8° for a validated period of time.

Negative Control

To verify testing conditions, a negative control is performed using the chosen diluent in place of the test preparation. There must be no growth of microorganisms. A negative control is also performed when testing the products as described under *Testing of Products*. A failed negative control requires an investigation.

Table 1. Preparation and Use of Test Microorganisms

		Growth Promotion		Suitability of Counting Method in the Presence of Product	
Microorganism	**Preparation of Test Strain**	**Total Aerobic Microbial Count**	**Total Yeasts and Molds Count**	**Total Aerobic Microbial Count**	**Total Yeasts and Molds Count**
Staphylococcus aureus such as ATCC 6538, NCIMB 9518, CIP 4.83, or NBRC 13276	Soybean–Casein Digest Agar or Soybean–Casein Digest Broth 30°–35° 18–24 hours	Soybean–Casein Digest Agar and Soybean–Casein Digest Broth ≤100 cfu 30°–35° ≤3 days		Soybean–Casein Digest Agar/MPN Soybean–Casein Digest Broth ≤100 cfu 30°–35° ≤3 days	
Pseudomonas aeruginosa such as ATCC 9027, NCIMB 8626, CIP 82. 118, or NBRC 13275	Soybean–Casein Digest Agar or Soybean–Casein Digest Broth 30°–35° 18–24 hours	Soybean–Casein Digest Agar and Soybean–Casein Digest Broth ≤100 cfu 30°–35° ≤3 days		Soybean–Casein Digest Agar/MPN Soybean–Casein Digest Broth ≤100 cfu 30°–35° ≤3 days	
Bacillus subtilis such as ATCC 6633, NCIMB 8054, CIP 52.62, or NBRC 3134	Soybean–Casein Digest Agar or Soybean–Casein Digest Broth 30°–35° 18–24 hours	Soybean–Casein Digest Agar and Soybean–Casein Digest Broth ≤100 cfu 30°–35° ≤3 days		Soybean–Casein Digest Agar/MPN Soybean–Casein Digest Broth ≤100 cfu 30°–35° ≤3 days	
Candida albicans such as ATCC 10231, NCPF 3179, IP 48.72, or NBRC 1594	Sabouraud Dextrose Agar or Sabouraud Dextrose Broth 20°–25° 2–3 days	Soybean–Casein Digest Agar ≤100 cfu 30°–35° ≤5 days	Sabouraud Dextrose Agar ≤100 cfu 20°–25° ≤5 days	Soybean–Casein Digest Agar ≤100 cfu 30°–35° ≤5 days MPN: not applicable	Sabouraud Dextrose Agar ≤100 cfu 20°–25° ≤5 days
Aspergillus brasiliensis such as ATCC 16404, IMI 149007, IP 1431.83, or NBRC 9455	Sabouraud Dextrose Agar or Potato–Dextrose Agar 20°–25° 5–7 days, or until good sporulation is achieved	Soybean–Casein Digest Agar ≤100 cfu 30°–35° ≤5 days	Sabouraud Dextrose Agar ≤100 cfu 20°–25° ≤5 days	Soybean–Casein Digest Agar ≤100 cfu 30°–35° ≤5 days MPN: not applicable	Sabouraud Dextrose Agar ≤100 cfu 20°–25° ≤5 days

Copyright (c) 2013 The United States Pharmacopeial Convention. All rights reserved.

Growth Promotion of the Media

Test each batch of ready-prepared medium and each batch of medium prepared either from dehydrated medium or from the ingredients described.

Inoculate portions/plates of *Soybean–Casein Digest Broth* and *Soybean–Casein Digest Agar* with a small number (not more than 100 cfu) of the microorganisms indicated in *Table 1*, using a separate portion/plate of medium for each. Inoculate plates of *Sabouraud Dextrose Agar* with a small number (not more than 100 cfu) of the microorganisms indicated in *Table 1*, using a separate plate of medium for each. Incubate according to the conditions described in *Table 1*.

For solid media, growth obtained must not differ by a factor greater than 2 from the calculated value for a standardized inoculum. For a freshly prepared inoculum, growth of the microorganisms comparable to that previously obtained with a previously tested and approved batch of medium occurs. Liquid media are suitable if clearly visible growth of the microorganisms comparable to that previously obtained with a previously tested and approved batch of medium occurs.

Suitability of the Counting Method in the Presence of Product

PREPARATION OF THE SAMPLE

The method for sample preparation depends on the physical characteristics of the product to be tested. If none of the procedures described below can be demonstrated to be satisfactory, a suitable alternative procedure must be developed.

Water-Soluble Products—Dissolve or dilute (usually a 1 in 10 dilution is prepared) the product to be examined in *Buffered Sodium Chloride–Peptone Solution pH 7.0*, *Phosphate Buffer Solution pH 7.2*, or *Soybean–Casein Digest Broth*. If necessary, adjust to a pH of 6 to 8. Further dilutions, where necessary, are prepared with the same diluent.

Nonfatty Products Insoluble in Water—Suspend the product to be examined (usually a 1 in 10 dilution is prepared) in *Buffered Sodium Chloride–Peptone Solution pH 7.0*, *Phosphate Buffer Solution pH 7.2*, or *Soybean–Casein Digest Broth*. A surface-active agent such as 1 g per L of polysorbate 80 may be added to assist the suspension of poorly wettable substances. If necessary, adjust to a pH of 6 to 8. Further dilutions, where necessary, are prepared with the same diluent.

Fatty Products—Dissolve in isopropyl myristate sterilized by filtration, or mix the product to be examined with the minimum necessary quantity of sterile polysorbate 80 or another noninhibitory sterile surface-active reagent heated, if necessary, to not more than 40° or, in exceptional cases, to not more than 45°. Mix carefully and if necessary maintain the temperature in a water bath. Add a sufficient quantity of the prewarmed chosen diluent to make a 1 in 10 dilution of the original product. Mix carefully, while maintaining the temperature for the shortest time necessary for the formation of an emulsion. Further serial 10-fold dilutions may be prepared using the chosen diluent containing a suitable concentration of sterile polysorbate 80 or another noninhibitory sterile surface-active reagent.

Fluids or Solids in Aerosol Form—Aseptically transfer the product into a membrane filter apparatus or a sterile container for further sampling. Use either the total contents or a defined number of metered doses from each of the containers tested.

Transdermal Patches—Remove the protective cover sheets ("release liners") of the transdermal patches and place them, adhesive side upwards, on sterile glass or plastic trays. Cover the adhesive surface with a suitable sterile porous material (e.g., sterile gauze) to prevent the patches from sticking together, and transfer the patches to a suitable volume of the chosen diluent containing inactivators such as polysorbate 80 and/or lecithin. Shake the preparation vigorously for at least 30 minutes.

INOCULATION AND DILUTION

Add to the sample prepared as directed above and to a control (with no test material included) a sufficient volume of the microbial suspension to obtain an inoculum of not more than than 100 cfu. The volume of the suspension of the inoculum should not exceed 1% of the volume of diluted product.

To demonstrate acceptable microbial recovery from the product, the lowest possible dilution factor of the prepared sample must be used for the test. Where this is not possible due to antimicrobial activity or poor solubility, further appropriate protocols must be developed. If inhibition of growth by the sample cannot otherwise be avoided, the aliquot of the microbial suspension may be added after neutralization, dilution, or filtration.

NEUTRALIZATION/REMOVAL OF ANTIMICROBIAL ACTIVITY

The number of microorganisms recovered from the prepared sample diluted as described in *Inoculation and Dilution* and incubated following the procedure described in *Recovery of Microorganisms in the Presence of Product*, is compared to the number of microorganisms recovered from the control preparation.

If growth is inhibited (reduction by a factor greater than 2), then modify the procedure for the particular enumeration test to ensure the validity of the results. Modification of the procedure may include, for example,

(1) An increase in the volume of the diluent or culture medium;
(2) Incorporation of a specific or general neutralizing agents into the diluent;

Accessed from 167.78.4.19 by James Cumbie (ocean22) on Mon Sep 09 15:04:23 EDT 2013

(3) Membrane filtration; or
(4) A combination of the above measures.

Neutralizing Agents—Neutralizing agents may be used to neutralize the activity of antimicrobial agents (see *Table 2*). They may be added to the chosen diluent or the medium preferably before sterilization. If used, their efficacy and their absence of toxicity for microorganisms must be demonstrated by carrying out a blank with neutralizer and without product.

Table 2. Common Neutralizing Agents/Methods for Interfering Substances

Interfering Substance	Potential Neutralizing Agents/Method
Glutaraldehyde, mercurials	Sodium hydrogen sulfite (Sodium bisulfite)
Phenolics, alcohol, aldehydes, sorbate	Dilution
Aldehydes	Glycine
Quaternary ammonium compounds (QACs), parahydroxybenzoates (parabens), bis-biguanides	Lecithin
QACs, iodine, parabens	Polysorbate
Mercurials	Thioglycollate
Mercurials, halogens, aldehydes	Thiosulfate
EDTA (edetate)	Mg or Ca ions

If no suitable neutralizing method can be found, it can be assumed that the failure to isolate the inoculated organism is attributable to the microbicidal activity of the product. This information serves to indicate that the article is not likely to be contaminated with the given species of the microorganism. However, it is possible that the product inhibits only some of the microorganisms specified herein, but does not inhibit others not included among the test strains or those for which the latter are not representative. Then, perform the test with the highest dilution factor compatible with microbial growth and the specific acceptance criterion.

RECOVERY OF MICROORGANISMS IN THE PRESENCE OF PRODUCT

For each of the microorganisms listed, separate tests are performed. Only microorganisms of the added test strain are counted.

Membrane Filtration—Use membrane filters having a nominal pore size not greater than 0.45 µm. The type of filter material is chosen in such a way that the bacteria-retaining efficiency is not affected by the components of the sample to be investigated. For each of the microorganisms listed, one membrane filter is used.

Transfer a suitable quantity of the sample prepared as described under *Preparation of the Sample, Inoculation and Dilution,* and *Neutralization/Removal of Antimicrobial Activity* (preferably representing 1 g of the product, or less if large numbers of cfu are expected) to the membrane filter, filter immediately, and rinse the membrane filter with an appropriate volume of diluent.

For the determination of total aerobic microbial count (TAMC), transfer the membrane filter to the surface of the *Soybean–Casein Digest Agar*. For the determination of total combined yeasts and molds count (TYMC), transfer the membrane to the surface of the *Sabouraud Dextrose Agar.* Incubate the plates as indicated in *Table 1*. Perform the counting.

Plate-Count Methods—Perform plate-count methods at least in duplicate for each medium, and use the mean count of the result.

Pour-Plate Method—For Petri dishes 9 cm in diameter, add to the dish 1 mL of the sample prepared as described under *Preparation of the Sample, Inoculation and Dilution,* and *Neutralization/Removal of Antimicrobial Activity* and 15 to 20 mL of *Soybean–Casein Digest Agar* or *Sabouraud Dextrose Agar,* both media maintained at not more than 45°. If larger Petri dishes are used, the amount of agar medium is increased accordingly. For each of the microorganisms listed in *Table 1*, at least two Petri dishes are used.

Incubate the plates as indicated in *Table 1*. Take the arithmetic mean of the counts per medium, and calculate the number of cfu in the original inoculum.

Surface-Spread Method—For Petri dishes 9 cm in diameter, add 15 to 20 mL of *Soybean–Casein Digest Agar* or *Sabouraud Dextrose Agar* at about 45° to each Petri dish, and allow to solidify. If larger Petri dishes are used, the volume of the agar is increased accordingly. Dry the plates, for example, in a laminar-airflow cabinet or in an incubator. For each of the microorganisms listed in *Table 1*, at least two Petri dishes are used. Spread a measured volume of not less than 0.1 mL of the sample, prepared as directed under *Preparation of the Sample, Inoculation and Dilution,* and *Neutralization/Removal of Antimicrobial Activity* over the surface of the medium. Incubate and count as directed for *Pour-Plate Method*.

Most-Probable-Number (MPN) Method—The precision and accuracy of the *MPN Method* is less than that of the *Membrane Filtration* method or the *Plate-Count Method*. Unreliable results are obtained particularly for the enumeration of molds. For these reasons, the *MPN Method* is reserved for the enumeration of TAMC in situations where no other method is available. If the use of the method is justified, proceed as follows.

Prepare a series of at least three serial 10-fold dilutions of the product as described for *Preparation of the Sample, Inoculation and Dilution,* and *Neutralization/Removal of Antimicrobial Activity*. From each level of dilution, three aliquots of 1 g or 1 mL are used to inoculate three tubes with 9 to 10 mL of *Soybean–Casein Digest Broth*. If necessary a surface-active agent such as polysorbate 80, or an inactivator of antimicrobial agents may be added to the medium. Thus, if three levels of dilution are prepared, nine tubes are inoculated.

Copyright (c) 2013 The United States Pharmacopeial Convention. All rights reserved.

Incubate all tubes at 30° to 35° for not more than 3 days. If reading of the results is difficult or uncertain owing to the nature of the product to be examined, subculture in the same broth or in *Soybean–Casein Digest Agar* for 1 to 2 days at the same temperature, and use these results. From *Table 3*, determine the most probable number of microorganisms per g or mL of the product to be examined.

Table 3. Most-Probable-Number Values of Microorganisms

Observed Combinations of Numbers of Tubes Showing Growth in Each Set			MPN per g or per mL of Product	95% Confidence Limits
Number of g or mL of Product per Tube				
0.1	0.01	0.001		
0	0	0	<3	0–9.4
0	0	1	3	0.1–9.5
0	1	0	3	0.1–10
0	1	1	6.1	1.2–17
0	2	0	6.2	1.2–17
0	3	0	9.4	3.5–35
1	0	0	3.6	0.2–17
1	0	1	7.2	1.2–17
1	0	2	11	4–35
1	1	0	7.4	1.3–20
1	1	1	11	4–35
1	2	0	11	4–35
1	2	1	15	5–38
1	3	0	16	5–38
2	0	0	9.2	1.5–35
2	0	1	14	4–35
2	0	2	20	5–38
2	1	0	15	4–38
2	1	1	20	5–38
2	1	2	27	9–94
2	2	0	21	5–40
2	2	1	28	9–94
2	2	2	35	9–94
2	3	0	29	9–94
2	3	1	36	9–94
3	0	0	23	5–94
3	0	1	38	9–104
3	0	2	64	16–181
3	1	0	43	9–181
3	1	1	75	17–199
3	1	2	120	30–360
3	1	3	160	30–380
3	2	0	93	18–360
3	2	1	150	30–380
3	2	2	210	30–400
3	2	3	290	90–990
3	3	0	240	40–990
3	3	1	460	90–1980
3	3	2	1100	200–4000
3	3	3	>1100	

RESULTS AND INTERPRETATION

When verifying the suitability of the *Membrane Filtration* method or the *Plate-Count Method*, a mean count of any of the test organisms not differing by a factor greater than 2 from the value of the control defined in *Inoculation and Dilution* in the absence of product must be obtained. When verifying the suitability of the *MPN Method*, the calculated value from the inoculum must be within 95% confidence limits of the results obtained with the control.

If the above criteria cannot be met for one of more of the organisms tested with any of the described methods, the method and test conditions that come closest to the criteria are used to test the product.

Accessed from 167.78.4.19 by James Cumbie (ocean22) on Mon Sep 09 15:04:23 EDT 2013

TESTING OF PRODUCTS

Amount Used for the Test

Unless otherwise directed, use 10 g or 10 mL of the product to be examined taken with the precautions referred to above. For fluids or solids in aerosol form, sample 10 containers. For transdermal patches, sample 10 patches.

The amount to be tested may be reduced for active substances that will be formulated in the following conditions: the amount per dosage unit (e.g., tablet, capsule, injection) is less than or equal to 1 mg, or the amount per g or mL (for preparations not presented in dose units) is less than 1 mg. In these cases, the amount of sample to be tested is not less than the amount present in 10 dosage units or 10 g or 10 mL of the product.

For materials used as active substances where the sample quantity is limited or batch size is extremely small (i.e., less than 1000 mL or 1000 g), the amount tested shall be 1% of the batch unless a lesser amount is prescribed or justified and authorized.

For products where the total number of entities in a batch is less than 200 (e.g., samples used in clinical trials), the sample size may be reduced to two units, or one unit if the size is less than 100.

Select the sample(s) at random from the bulk material or from the available containers of the preparation. To obtain the required quantity, mix the contents of a sufficient number of containers to provide the sample.

Examination of the Product

MEMBRANE FILTRATION

Use a filtration apparatus designed to allow the transfer of the filter to the medium. Prepare the sample using a method that has been shown to be suitable as described in *Growth Promotion Test and Suitability of the Counting Method,* transfer the appropriate amount to each of two membrane filters, and filter immediately. Wash each filter following the procedure shown to be suitable.

For the determination of TAMC, transfer one of the membrane filters to the surface of *Soybean–Casein Digest Agar*. For the determination of TYMC, transfer the other membrane to the surface of *Sabouraud Dextrose Agar*. Incubate the plate of *Soybean–Casein Digest Agar* at 30° to 35° for 3 to 5 days and the plate of *Sabouraud Dextrose Agar* at 20° to 25° for 5 to 7 days. Calculate the number of cfu per g or per mL of product.

When examining transdermal patches, separately filter 10% of the volume of the preparation described for *Preparation of the Sample* through each of two sterile filter membranes. Transfer one membrane to *Soybean–Casein Digest Agar* for TAMC and the other membrane to *Sabouraud Dextrose Agar* for TYMC.

PLATE-COUNT METHODS

Pour-Plate Method—Prepare the sample using a method that has been shown to be suitable as described in *Growth Promotion Test and Suitability of the Counting Method*. Prepare for each medium at least two Petri dishes for each level of dilution. Incubate the plates of *Soybean–Casein Digest Agar* at 30° to 35° for 3 to 5 days and the plates of *Sabouraud Dextrose Agar* at 20° to 25° for 5 to 7 days. Select the plates corresponding to a given dilution and showing the highest number of colonies less than 250 for TAMC and 50 for TYMC. Take the arithmetic mean per culture medium of the counts, and calculate the number of cfu per g or per mL of product.

Surface-Spread Method—Prepare the sample using a method that has been shown to be suitable as described in *Growth Promotion Test and Suitability of the Counting Method*. Prepare at least two Petri dishes for each medium and each level of dilution. For incubation and calculation of the number of cfu, proceed as directed for the *Pour-Plate Method.*

MOST-PROBABLE-NUMBER METHOD

Prepare and dilute the sample using a method that has been shown to be suitable as decribed in *Growth Promotion Test and Suitability of the Counting Method*. Incubate all tubes for 3 to 5 days at 30° to 35°. Subculture if necessary, using the procedure shown to be suitable. Record for each level of dilution the number of tubes showing microbial growth. Determine the most probable number of microorganisms per g or mL of the product to be examined from *Table 3*.

Interpretation of the Results

The total aerobic microbial count (TAMC) is considered to be equal to the number of cfu found using *Soybean–Casein Digest Agar;* if colonies of fungi are detected on this medium, they are counted as part of TAMC. The total combined yeasts and molds count (TYMC) is considered to be equal to the number of cfu found using *Sabouraud Dextrose Agar;* if colonies of bacteria are detected on this medium, they are counted as part of TYMC. When the TYMC is expected to exceed the acceptance criterion due to the bacterial growth, *Sabouraud Dextrose Agar* containing antibiotics may be used. If the count is carried out by the *MPN Method,* the calculated value is TAMC.

When an acceptance criterion for microbiological quality is prescribed, it is interpreted as follows:

Copyright (c) 2013 The United States Pharmacopeial Convention. All rights reserved.

— 10^1 cfu: maximum acceptable count = 20;
— 10^2 cfu: maximum acceptable count = 200;
— 10^3 cfu: maximum acceptable count = 2000;
and so forth.

The recommended solutions and media are described in *Tests for Specified Microorganisms* ⟨62⟩.

⟨62⟩ MICROBIOLOGICAL EXAMINATION OF NONSTERILE PRODUCTS: TESTS FOR SPECIFIED MICROORGANISMS

INTRODUCTION

The tests described hereafter will allow determination of the absence of, or limited occurrence of, specified microorganisms that may be detected under the conditions described.

The tests are designed primarily to determine whether a substance or preparation complies with an established specification for microbiological quality. When used for such purposes, follow the instructions given below, including the number of samples to be taken, and interpret the results as stated below.

Alternative microbiological procedures, including automated methods, may be used, provided that their equivalence to the Pharmacopeial method has been demonstrated.

GENERAL PROCEDURES

The preparation of samples is carried out as described in *Microbiological Examination of Nonsterile Products: Microbial Enumeration Tests* ⟨61⟩.

If the product to be examined has antimicrobial activity, this is insofar as possible removed or neutralized as described in *Microbiological Examination of Nonsterile Products: Microbial Enumeration Tests* ⟨61⟩.

If surface-active substances are used for sample preparation, their absence of toxicity for microorganisms and their compatibility with any inactivators used must be demonstrated as described in *Microbiological Examination of Nonsterile Products: Microbial Enumeration Tests* ⟨61⟩.

GROWTH-PROMOTING AND INHIBITORY PROPERTIES OF THE MEDIA, SUITABILITY OF THE TEST AND NEGATIVE CONTROLS

The ability of the test to detect microorganisms in the presence of the product to be tested must be established. Suitability must be confirmed if a change in testing performance or a change in the product that may affect the outcome of the test is introduced.

Preparation of Test Strains

Use standardized stable suspensions of test strains as stated below. Seed-lot culture maintenance techniques (seed-lot systems) are used so that the viable microorganisms used for inoculation are not more than five passages removed from the original master seed-lot.

AEROBIC MICROORGANISMS

Grow each of the bacterial test strains separately in containers containing *Soybean–Casein Digest Broth* or on *Soybean–Casein Digest Agar* at 30° to 35° for 18 to 24 hours. Grow the test strain for *Candida albicans* separately on *Sabouraud Dextrose Agar* or in *Sabouraud Dextrose Broth* at 20° to 25° for 2 to 3 days.

Staphylococcus aureus	such as ATCC 6538, NCIMB 9518, CIP 4.83, or NBRC 13276
Pseudomonas aeruginosa	such as ATCC 9027, NCIMB 8626, CIP 82.118, or NBRC 13275
Escherichia coli	such as ATCC 8739, NCIMB 8545, CIP 53.126, or NBRC 3972
Salmonella enterica subsp. *enterica* serovar Typhimurium or, as an alternative,	such as ATCC 14028
Salmonella enterica subsp. *enterica* serovar Abony	such as NBRC 100797, NCTC 6017, or CIP 80.39
Candida albicans	such as ATCC 10231, NCPF 3179, IP 48.72, or NBRC 1594

Accessed from 167.78.4.19 by James Cumbie (ocean22) on Mon Sep 09 15:04:23 EDT 2013

Use *Buffered Sodium Chloride–Peptone Solution pH 7.0* or *Phosphate Buffer Solution pH 7.2* to make test suspensions. Use the suspensions within 2 hours or within 24 hours if stored at 2° to 8°.

CLOSTRIDIA

Use *Clostridium sporogenes* such as ATCC 11437 (NBRC 14293, NCIMB 12343, CIP 100651) or ATCC 19404 (NCTC 532 or CIP 79.3). Grow the clostridial test strain under anaerobic conditions in *Reinforced Medium for Clostridia* at 30° to 35° for 24 to 48 hours. As an alternative to preparing and then diluting down a fresh suspension of vegetative cells of *Cl. sporogenes,* a stable spore suspension is used for test inoculation. The stable spore suspension may be maintained at 2° to 8° for a validated period.

Negative Control

To verify testing conditions, a negative control is performed using the chosen diluent in place of the test preparation. There must be no growth of microorganisms. A negative control is also performed when testing the products as described under *Testing of Products*. A failed negative control requires an investigation.

Growth Promotion and Inhibitory Properties of the Media

Test each batch of ready-prepared medium and each batch of medium prepared either from dehydrated medium or from ingredients. Verify suitable properties of relevant media as described in *Table 1*.

Test for Growth-Promoting Properties, Liquid Media—Inoculate a portion of the appropriate medium with a small number (not more than 100 cfu) of the appropriate microorganism. Incubate at the specified temperature for not more than the shortest period of time specified in the test. Clearly visible growth of the microorganism comparable to that previously obtained with a previously tested and approved batch of medium occurs.

Test for Growth-Promoting Properties, Solid Media—Perform *Surface-Spread Method* (see *Plate-Count Methods* under *Microbiological Examination of Nonsterile Products: Microbial Enumeration Tests* ⟨61⟩), inoculating each plate with a small number (not more than 100 cfu) of the appropriate microorganism. Incubate at the specified temperature for not more than the shortest period of time

Table 1. Growth Promoting, Inhibitory, and Indicative Properties of Media

Test/Medium	Property	Test Strains
Test for bile-tolerant Gram-negative bacteria		
Enterobacteria Enrichment Broth Mossel	Growth promoting	*E. coli*
		P. aeruginosa
	Inhibitory	*S. aureus*
Violet Red Bile Glucose Agar	Growth promoting + Indicative	*E. coli*
		P. aeruginosa
Test for Escherichia coli		
MacConkey Broth	Growth promoting	*E. coli*
	Inhibitory	*S. aureus*
MacConkey Agar	Growth promoting + Indicative	*E. coli*
Test for Salmonella		
Rappaport Vassiliadis Salmonella Enrichment Broth	Growth promoting	*Salmonella enterica* subsp. *enterica* serovar *Typhimurium* or
		Salmonella enterica subsp. *enterica* serovar *Abony*
	Inhibitory	*S. aureus*
Xylose Lysine Deoxycholate Agar	Growth promoting + Indicative	*Salmonella enterica* subsp. *enterica* serovar *Typhimurium* or
		Salmonella enterica subsp. *enterica* serovar *Abony*
Test for Pseudomonas aeruginosa		
Cetrimide Agar	Growth promoting	*P. aeruginosa*
	Inhibitory	*E. coli*
Test for Staphylococcus aureus		
Mannitol Salt Agar	Growth promoting + Indicative	*S. aureus*
	Inhibitory	*E. coli*
Test for Clostridia		
Reinforced Medium for Clostridia	Growth promoting	*Cl. sporogenes*
Columbia Agar	Growth promoting	*Cl. sporogenes*
Test for Candida albicans		
Sabouraud Dextrose Broth	Growth promoting	*C. albicans*
Sabouraud Dextrose Agar	Growth promoting + Indicative	*C. albicans*

Copyright (c) 2013 The United States Pharmacopeial Convention. All rights reserved.

specified in the test. Growth of the microorganism comparable to that previously obtained with a previously tested and approved batch of medium occurs.

Test for Inhibitory Properties, Liquid or Solid Media—Inoculate the appropriate medium with at least 100 cfu of the appropriate microorganism. Incubate at the specified temperature for not less than the longest period of time specified in the test. No growth of the test microorganism occurs.

Test for Indicative Properties—Perform *Surface-Spread Method* (see *Plate-Count Methods* under *Microbiological Examination of Nonsterile Products: Microbial Enumeration Tests* ⟨61⟩), inoculating each plate with a small number (not more than 100 cfu) of the appropriate microorganism. Incubate at the specified temperature for a period of time within the range specified in the test. Colonies are comparable in appearance and indication reactions to those previously obtained with a previously tested and approved batch of medium.

Suitability of the Test Method

For each new product to be tested perform sample preparation as described in the relevant paragraph under *Testing of Products*. At the time of mixing, add each test strain in the prescribed growth medium. Inoculate the test strains individually. Use a number of microorganisms equivalent to not more than 100 cfu in the inoculated test preparation.

Perform the test as described in the relevant paragraph under *Testing of Products* using the shortest incubation period prescribed.

The specified microorganisms must be detected with the indication reactions as described under *Testing of Products*.

Any antimicrobial activity of the product necessitates a modification of the test procedure (see *Neutralization/Removal of Antimicrobial Activity* under *Microbiological Examination of Nonsterile Products: Microbial Enumeration Tests* ⟨61⟩).

For a given product, if the antimicrobial activity with respect to a microorganism for which testing is prescribed cannot be neutralized, then it is to be assumed that the inhibited microorganism will not be present in the product.

TESTING OF PRODUCTS

Bile-Tolerant Gram-Negative Bacteria

Sample Preparation and Pre-Incubation—Prepare a sample using a 1 in 10 dilution of not less than 1 g of the product to be examined as described in *Microbiological Examination of Nonsterile Products: Microbial Enumeration Tests* ⟨61⟩, but using *Soybean–Casein Digest Broth* as the chosen diluent, mix, and incubate at 20° to 25° for a time sufficient to resuscitate the bacteria but not sufficient to encourage multiplication of the organisms (usually 2 hours but not more than 5 hours).

Test for Absence—Unless otherwise prescribed, use the volume corresponding to 1 g of the product, as prepared in *Sample Preparation and Pre-Incubation*, to inoculate *Enterobacteria Enrichment Broth Mossel*. Incubate at 30° to 35° for 24 to 48 hours. Subculture on plates of *Violet Red Bile Glucose Agar*. Incubate at 30° to 35° for 18 to 24 hours.

The product complies with the test if there is no growth of colonies.

Quantitative Test—

Selection and Subculture—Inoculate suitable quantities of *Enterobacteria Enrichment Broth Mossel* with the preparation as directed under *Sample Preparation and Pre-Incubation* and/or dilutions of it containing respectively 0.1 g, 0.01 g, and 0.001 g (or 0.1 mL, 0.01 mL, and 0.001 mL) of the product to be examined. Incubate at 30° to 35° for 24 to 48 hours. Subculture each of the cultures on a plate of *Violet Red Bile Glucose Agar*. Incubate at 30° to 35° for 18 to 24 hours.

Interpretation—Growth of colonies constitutes a positive result. Note the smallest quantity of the product that gives a positive result and the largest quantity that gives a negative result. Determine from *Table 2* the probable number of bacteria.

Table 2. Interpretation of Results

Results for Each Quantity of Product			
0.1 g or 0.1 mL	**0.01 g or 0.01 mL**	**0.001 g or 0.001 mL**	**Probable Number of Bacteria per g or mL of Product**
+	+	+	more than 10^3
+	+	–	less than 10^3 and more than 10^2
+	–	–	less than 10^2 and more than 10
–	–	–	less than 10

Escherichia coli

Sample Preparation and Pre-Incubation—Prepare a sample using a 1 in 10 dilution of not less than 1 g of the product to be examined as described in *Microbiological Examination of Nonsterile Products: Microbial Enumeration Tests* ⟨61⟩, and use 10 mL or the

Accessed from 167.78.4.19 by James Cumbie (ocean22) on Mon Sep 09 15:04:23 EDT 2013

quantity corresponding to 1 g or 1 mL, to inoculate a suitable amount (determined as described under *Suitability of the Test Method*) of *Soybean–Casein Digest Broth,* mix, and incubate at 30° to 35° for 18 to 24 hours.

Selection and Subculture—Shake the container, transfer 1 mL of *Soybean–Casein Digest Broth* to 100 mL of *MacConkey Broth,* and incubate at 42° to 44° for 24 to 48 hours. Subculture on a plate of *MacConkey Agar* at 30° to 35° for 18 to 72 hours.

Interpretation—Growth of colonies indicates the possible presence of *E. coli*. This is confirmed by identification tests.

The product complies with the test if no colonies are present or if the identification tests are negative.

Salmonella

Sample Preparation and Pre-Incubation—Prepare the product to be examined as described in *Microbiological Examination of Nonsterile Products: Microbial Enumeration Tests* ⟨61⟩, and use the quantity corresponding to not less than 10 g or 10 mL to inoculate a suitable amount (determined as described under *Suitability of the Test Method*) of *Soybean–Casein Digest Broth,* mix, and incubate at 30° to 35° for 18 to 24 hours.

Selection and Subculture—Transfer 0.1 mL of *Soybean–Casein Digest Broth* to 10 mL of *Rappaport Vassiliadis Salmonella Enrichment Broth,* and incubate at 30° to 35° for 18 to 24 hours. Subculture on plates of *Xylose Lysine Deoxycholate Agar*. Incubate at 30° to 35° for 18 to 48 hours.

Interpretation—The possible presence of *Salmonella* is indicated by the growth of well-developed, red colonies, with or without black centers. This is confirmed by identification tests.

The product complies with the test if colonies of the types described are not present or if the confirmatory identification tests are negative.

Pseudomonas aeruginosa

Sample Preparation and Pre-Incubation—Prepare a sample using a 1 in 10 dilution of not less than 1 g of the product to be examined as described in *Microbiological Examination of Nonsterile Products: Microbial Enumeration Tests* ⟨61⟩, and use 10 mL or the quantity corresponding to 1 g or 1 mL to inoculate a suitable amount (determined as described under *Suitability of the Test Method*) of *Soybean–Casein Digest Broth,* and mix. When testing transdermal patches, filter the volume of sample corresponding to one patch of the preparation (see *Transdermal Patches* under *Preparation of the Sample* in *Microbiological Examination of Nonsterile Products: Microbial Enumeration Tests* ⟨61⟩) through a sterile filter membrane, and place in 100 mL of *Soybean–Casein Digest Broth*. Incubate at 30° to 35° for 18 to 24 hours.

Selection and Subculture—Subculture on a plate of *Cetrimide Agar,* and incubate at 30° to 35° for 18 to 72 hours.

Interpretation—Growth of colonies indicates the possible presence of *P. aeruginosa*. This is confirmed by identification tests.

The product complies with the test if colonies are not present or if the confirmatory identification tests are negative.

Staphylococcus aureus

Sample Preparation and Pre-Incubation—Prepare a sample using a 1 in 10 dilution of not less than 1 g of the product to be examined as described in *Microbiological Examination of Nonsterile Products: Microbial Enumeration Tests* ⟨61⟩, and use 10 mL or the quantity corresponding to 1 g or 1 mL to inoculate a suitable amount (determined as described under *Suitability of the Test Method*) of *Soybean–Casein Digest Broth*, and homogenize. When testing transdermal patches, filter the volume of sample corresponding to one patch of the preparation (see *Transdermal Patches* under *Preparation of the Sample* in *Microbiological Examination of Nonsterile Products: Microbial Enumeration Tests* ⟨61⟩) through a sterile filter membrane, and place in 100 mL of *Soybean–Casein Digest Broth*. Incubate at 30° to 35° for 18 to 24 hours.

Selection and Subculture—Subculture on a plate of *Mannitol Salt Agar,* and incubate at 30° to 35° for 18 to 72 hours.

Interpretation—The possible presence of *S. aureus* is indicated by the growth of yellow or white colonies surrounded by a yellow zone. This is confirmed by identification tests.

The product complies with the test if colonies of the types described are not present or if the confirmatory identification tests are negative.

Clostridia

Sample Preparation and Heat Treatment—Prepare a sample using a 1 in 10 dilution (with a minimum total volume of 20 mL) of not less than 2 g or 2 mL of the product to be examined as described in *Microbiological Examination of Nonsterile Products: Microbial Enumeration Tests* ⟨61⟩. Divide the sample into two portions of at least 10 mL. Heat one portion at 80° for 10 minutes, and cool rapidly. Do not heat the other portion.

Selection and Subculture—Use 10 mL or the quantity corresponding to 1 g or 1 mL of the product to be examined of both portions to inoculate suitable amounts (determined as described under *Suitability of the Test Method*) of *Reinforced Medium for Clostridia.* Incubate under anaerobic conditions at 30° to 35° for 48 hours. After incubation, make subcultures from each container on *Columbia Agar,* and incubate under anaerobic conditions at 30° to 35° for 48 to 72 hours.

Copyright (c) 2013 The United States Pharmacopeial Convention. All rights reserved.

Interpretation—The occurrence of anaerobic growth of rods (with or without endospores) giving a negative catalase reaction indicates the presence of Clostridia.

This is confirmed by identification tests. The product complies with the test if colonies of the types described are not present or if the confirmatory identification tests are negative.

Candida albicans

Sample Preparation and Pre-Incubation—Prepare the product to be examined as described in *Microbiological Examination of Nonsterile Products: Microbial Enumeration Tests* ⟨61⟩, and use 10 mL or the quantity corresponding to not less than 1 g or 1 mL, to inoculate 100 mL of *Sabouraud Dextrose Broth,* and mix. Incubate at 30° to 35° for 3 to 5 days.

Selection and Subculture—Subculture on a plate of *Sabouraud Dextrose Agar,* and incubate at 30° to 35° for 24 to 48 hours.

Interpretation—Growth of white colonies may indicate the presence of *C. albicans*. This is confirmed by identification tests.

The product complies with the test if such colonies are not present or if the confirmatory identification tests are negative.

RECOMMENDED SOLUTIONS AND CULTURE MEDIA

NOTE—This section is given for information.

The following solutions and culture media have been found satisfactory for the purposes for which they are prescribed in the test for microbial contamination in the Pharmacopeia. Other media may be used provided that their suitability can be demonstrated.

Stock Buffer Solution—Transfer 34 g of potassium dihydrogen phosphate to a 1000-mL volumetric flask, dissolve in 500 mL of Purified Water, adjust with sodium hydroxide to a pH of 7.2 ± 0.2, add Purified Water to volume, and mix. Dispense in containers, and sterilize. Store at a temperature of 2° to 8°.

Phosphate Buffer Solution pH 7.2—Prepare a mixture of Purified Water and *Stock Buffer Solution* (800:1 v/v), and sterilize.

Buffered Sodium Chloride–Peptone Solution pH 7.0	
Potassium Dihydrogen Phosphate	3.6 g
Disodium Hydrogen Phosphate Dihydrate	7.2 g (equivalent to 0.067 M phosphate)
Sodium Chloride	4.3 g
Peptone (meat or casein)	1.0 g
Purified Water	1000 mL

Sterilize in an autoclave using a validated cycle.

Soybean–Casein Digest Broth	
Pancreatic Digest of Casein	17.0 g
Papaic Digest of Soybean	3.0 g
Sodium Chloride	5.0 g
Dibasic Hydrogen Phosphate	2.5 g
Glucose Monohydrate	2.5 g
Purified Water	1000 mL

Adjust the pH so that after sterilization it is 7.3 ± 0.2 at 25°. Sterilize in an autoclave using a validated cycle.

Soybean–Casein Digest Agar	
Pancreatic Digest of Casein	15.0 g
Papaic Digest of Soybean	5.0 g
Sodium Chloride	5.0 g
Agar	15.0 g
Purified Water	1000 mL

Adjust the pH so that after sterilization it is 7.3 ± 0.2 at 25°. Sterilize in an autoclave using a validated cycle.

Sabouraud Dextrose Agar	
Dextrose	40.0 g
Mixture of Peptic Digest of Animal Tissue and Pancreatic Digest of Casein (1:1)	10.0 g
Agar	15.0 g
Purified Water	1000 mL

Adjust the pH so that after sterilization it is 5.6 ± 0.2 at 25°. Sterilize in an autoclave using a validated cycle.

Accessed from 167.78.4.19 by James Cumbie (ocean22) on Mon Sep 09 15:04:23 EDT 2013

Potato Dextrose Agar	
Infusion from potatoes	200 g
Dextrose	20.0 g
Agar	15.0 g
Purified Water	1000 mL

Adjust the pH so that after sterilization it is 5.6 ± 0.2 at 25°. Sterilize in an autoclave using a validated cycle.

Sabouraud Dextrose Broth	
Dextrose	20.0 g
Mixture of Peptic Digest of Animal Tissue and Pancreatic Digest of Casein (1:1)	10.0 g
Purified Water	1000 mL

Adjust the pH so that after sterilization it is 5.6 ± 0.2 at 25°. Sterilize in an autoclave using a validated cycle.

Enterobacteria Enrichment Broth Mossel	
Pancreatic Digest of Gelatin	10.0 g
Glucose Monohydrate	5.0 g
Dehydrated Ox Bile	20.0 g
Potassium Dihydrogen Phosphate	2.0 g
Disodium Hydrogen Phosphate Dihydrate	8.0 g
Brilliant Green	15 mg
Purified Water	1000 mL

Adjust the pH so that after heating it is 7.2 ± 0.2 at 25°. Heat at 100° for 30 minutes, and cool immediately.

Violet Red Bile Glucose Agar	
Yeast Extract	3.0 g
Pancreatic Digest of Gelatin	7.0 g
Bile Salts	1.5 g
Sodium Chloride	5.0 g
Glucose Monohydrate	10.0 g
Agar	15.0 g
Neutral Red	30 mg
Crystal Violet	2 mg
Purified Water	1000 mL

Adjust the pH so that after heating it is 7.4 ± 0.2 at 25°. Heat to boiling; do not heat in an autoclave.

MacConkey Broth	
Pancreatic Digest of Gelatin	20.0 g
Lactose Monohydrate	10.0 g
Dehydrated Ox Bile	5.0 g
Bromocresol Purple	10 mg
Purified Water	1000 mL

Adjust the pH so that after sterilization it is 7.3 ± 0.2 at 25°. Sterilize in an autoclave using a validated cycle.

MacConkey Agar	
Pancreatic Digest of Gelatin	17.0 g
Peptones (meat and casein)	3.0 g
Lactose Monohydrate	10.0 g
Sodium Chloride	5.0 g
Bile Salts	1.5 g
Agar	13.5 g
Neutral Red	30.0 mg
Crystal Violet	1 mg
Purified Water	1000 mL

Adjust the pH so that after sterilization it is 7.1 ± 0.2 at 25°. Boil for 1 minute with constant shaking, then sterilize in an autoclave using a validated cycle.

Rappaport Vassiliadis Salmonella Enrichment Broth	
Soya Peptone	4.5 g
Magnesium Chloride Hexahydrate	29.0 g

Copyright (c) 2013 The United States Pharmacopeial Convention. All rights reserved.

Rappaport Vassiliadis Salmonella Enrichment Broth	
Sodium Chloride	8.0 g
Dipotassium Phosphate	0.4 g
Potassium Dihydrogen Phosphate	0.6 g
Malachite Green	0.036 g
Purified Water	1000 mL

Dissolve, warming slightly. Sterilize in an autoclave using a validated cycle, at a temperature not exceeding 115°. The pH is to be 5.2 ± 0.2 at 25° after heating and autoclaving.

Xylose Lysine Deoxycholate Agar	
Xylose	3.5 g
L-Lysine	5.0 g
Lactose Monohydrate	7.5 g
Sucrose	7.5 g
Sodium Chloride	5.0 g
Yeast Extract	3.0 g
Phenol Red	80 mg
Agar	13.5 g
Sodium Deoxycholate	2.5 g
Sodium Thiosulfate	6.8 g
Ferric Ammonium Citrate	0.8 g
Purified Water	1000 mL

Adjust the pH so that after heating it is 7.4 ± 0.2 at 25°. Heat to boiling, cool to 50°, and pour into Petri dishes. Do not heat in an autoclave.

Cetrimide Agar	
Pancreatic Digest of Gelatin	20.0 g
Magnesium Chloride	1.4 g
Dipotassium Sulfate	10.0 g
Cetrimide	0.3 g
Agar	13.6 g
Purified Water	1000 mL
Glycerol	10.0 mL

Heat to boiling for 1 minute with shaking. Adjust the pH so that after sterilization it is 7.2 ± 0.2 at 25°. Sterilize in an autoclave using a validated cycle.

Mannitol Salt Agar	
Pancreatic Digest of Casein	5.0 g
Peptic Digest of Animal Tissue	5.0 g
Beef Extract	1.0 g
D-Mannitol	10.0 g
Sodium Chloride	75.0 g
Agar	15.0 g
Phenol Red	0.025 g
Purified Water	1000 mL

Heat to boiling for 1 minute with shaking. Adjust the pH so that after sterilization it is 7.4 ± 0.2 at 25°. Sterilize in an autoclave using a validated cycle.

Reinforced Medium for Clostridia	
Beef Extract	10.0 g
Peptone	10.0 g
Yeast Extract	3.0 g
Soluble Starch	1.0 g
Glucose Monohydrate	5.0 g
Cysteine Hydrochloride	0.5 g
Sodium Chloride	5.0 g
Sodium Acetate	3.0 g
Agar	0.5 g
Purified Water	1000 mL

Accessed from 167.78.4.19 by James Cumbie (ocean22) on Mon Sep 09 15:04:23 EDT 2013

Hydrate the agar, and dissolve by heating to boiling with continuous stirring. If necessary, adjust the pH so that after sterilization it is about 6.8 ± 0.2 at 25°. Sterilize in an autoclave using a validated cycle.

Columbia Agar	
Pancreatic Digest of Casein	10.0 g
Meat Peptic Digest	5.0 g
Heart Pancreatic Digest	3.0 g
Yeast Extract	5.0 g
Maize Starch	1.0 g
Sodium Chloride	5.0 g
Agar, according to gelling power	10.0–15.0 g
Purified Water	1000 mL

Hydrate the agar, and dissolve by heating to boiling with continuous stirring. If necessary, adjust the pH so that after sterilization it is 7.3 ± 0.2 at 25°. Sterilize in an autoclave using a validated cycle. Allow to cool to 45° to 50°; add, where necessary, gentamicin sulfate corresponding to 20 mg of gentamicin base, and pour into Petri dishes.

⟨71⟩ STERILITY TESTS

◆Portions of this general chapter have been harmonized with the corresponding texts of the European Pharmacopeia and/or the Japanese Pharmacopeia. Those portions that are not harmonized are marked with symbols (◆◆) to specify this fact.◆

These Pharmacopeial procedures are not by themselves designed to ensure that a batch of product is sterile or has been sterilized. This is accomplished primarily by validation of the sterilization process or of the aseptic processing procedures.

The test is applied to substances, preparations, or articles which, according to the Pharmacopeia, are required to be sterile. However, a satisfactory result only indicates that no contaminating microorganism has been found in the sample examined under the conditions of the test.

PRECAUTIONS AGAINST MICROBIAL CONTAMINATION

The test for sterility is carried out under aseptic conditions. In order to achieve such conditions, the test environment has to be adapted to the way in which the sterility test is performed. The precautions taken to avoid contamination are such that they do not affect any microorganisms that are to be revealed in the test. The working conditions in which the tests are performed are monitored regularly by appropriate sampling of the working area and by carrying out appropriate controls.

CULTURE MEDIA AND INCUBATION TEMPERATURES

Media for the test may be prepared as described below or equivalent commercial media may be used provided that they comply with the requirements of the *Growth Promotion Test of Aerobes, Anaerobes, and Fungi.*

The following culture media have been found to be suitable for the test for sterility. *Fluid Thioglycollate Medium* is primarily intended for the culture of anaerobic bacteria. However, it will also detect aerobic bacteria. *Soybean–Casein Digest Medium* is suitable for the culture of both fungi and aerobic bacteria.

Fluid Thioglycollate Medium

L-Cystine	0.5 g
Sodium Chloride	2.5 g
Dextrose Monohydrate/Anhydrous	5.5/5.0 g
Agar	0.75 g
Yeast Extract (water-soluble)	5.0 g
Pancreatic Digest of Casein	15.0 g
Sodium Thioglycollate	0.5 g
or Thioglycolic Acid	0.3 mL
Resazurin Sodium Solution (1 in 1000), freshly prepared	1.0 mL
Purified Water	1000 mL

pH after sterilization: 7.1±0.2.

Mix the L-cystine, agar, sodium chloride, dextrose, yeast extract, and pancreatic digest of casein with the purified water, and heat until solution is effected. Dissolve the sodium thioglycollate or thioglycolic acid in the solution and, if necessary, add 1 N sodium

Copyright (c) 2013 The United States Pharmacopeial Convention. All rights reserved.

hydroxide so that, after sterilization, the solution will have a pH of 7.1 ± 0.2. If filtration is necessary, heat the solution again without boiling, and filter while hot through moistened filter paper. Add the resazurin sodium solution, mix, and place the medium in suitable vessels that provide a ratio of surface to depth of medium such that not more than the upper half of the medium has undergone a color change indicative of oxygen uptake at the end of the incubation period. Sterilize using a validated process. If the medium is stored, store at a temperature between 2° and 25° in a sterile, airtight container. If more than the upper one-third of the medium has acquired a pink color, the medium may be restored once by heating the containers in a water-bath or in free-flowing steam until the pink color disappears and by cooling quickly, taking care to prevent the introduction of nonsterile air into the container. Do not use the medium for a longer storage period than has been validated.

Fluid Thioglycollate Medium is to be incubated at 30°–35°. For products containing a mercurial preservative that cannot be tested by the membrane filtration method, *Fluid Thioglycollate Medium* incubated at 20°–25° may be used instead of *Soybean–Casein Digest Medium* provided that it has been validated as described in *Growth Promotion Test of Aerobes, Anaerobes, and Fungi*. Where prescribed or justified and authorized, the following alternative thioglycollate medium might be used. Prepare a mixture having the same composition as that of the *Fluid Thioglycollate Medium*, but omitting the agar and the resazurin sodium solution. Sterilize as directed above. The pH after sterilization is 7.1 ± 0.2. Heat in a water bath prior to use and incubate at 30°–35° under anaerobic conditions.

Soybean–Casein Digest Medium

Pancreatic Digest of Casein	17.0 g
Papaic Digest of Soybean Meal	3.0 g
Sodium Chloride	5.0 g
Dibasic Potassium Phosphate	2.5 g
Dextrose Monohydrate/Anhydrous	2.5/2.3 g
Purified Water	1000 mL

pH after sterilization: 7.3±0.2.

Dissolve the solids in the Purified Water, heating slightly to effect a solution. Cool the solution to room temperature, and adjust the pH with 1 N sodium hydroxide so that, after sterilization, it will have a pH of 7.3 ± 0.2. Filter, if necessary to clarify, dispense into suitable containers, and sterilize using a validated procedure. Store at a temperature between 2° and 25° in a sterile well-closed container, unless it is intended for immediate use. Do not use the medium for a longer storage period than has been validated.

Soybean–Casein Digest Medium is to be incubated at 22.5 ± 2.5°.

◆Media for Penicillins or Cephalosporins

Where sterility test media are to be used in the *Direct Inoculation of the Culture Medium* method under *Test for Sterility of the Product to be Examined*, modify the preparation of *Fluid Thioglycollate Medium* and the *Soybean–Casein Digest Medium* as follows. To the containers of each medium, transfer aseptically a quantity of β-lactamase sufficient to inactivate the amount of antibiotic in the specimen under test. Determine the quantity of β-lactamase required to inactivate the antibiotic by using a β-lactamase preparation that has been assayed previously for its penicillin- or cephalosporin-inactivating power. [NOTE—Supplemented β-lactamase media can also be used in the membrane filtration test.]

Alternatively (in an area completely separate from that used for sterility testing), confirm that an appropriate amount of β-lactamase is incorporated into the medium, following either method under *Method Suitability Test*, using less than 100 colony-forming units (cfu) of *Staphylococcus aureus* (see *Table 1*) as the challenge. Typical microbial growth of the inoculated culture must be observed as a confirmation that the β-lactamase concentration is appropriate.◆

Table 1. Strains of the Test Microorganisms Suitable for Use in the Growth Promotion Test and the Method Suitability Test

Aerobic bacteria	
Staphylococcus aureus	ATCC 6538, CIP 4.83, NCTC 10788, NCIMB 9518, NBRC 13276
Bacillus subtilis	ATCC 6633, CIP 52.62, NCIMB 8054, NBRC 3134
Pseudomonas aeruginosa◆[1]◆	ATCC 9027, NCIMB 8626, CIP 82.118, NBRC 13275
Anaerobic bacterium	
Clostridium sporogenes◆[2]◆	ATCC 19404, CIP 79.3, NCTC 532 or ATCC 11437, NBRC 14293
Fungi	
Candida albicans	ATCC 10231, IP 48.72, NCPF 3179, NBRC 1594
Aspergillus brasiliensis (Aspergillus Niger)	ATCC 16404, IP 1431.83, IMI 149007, NBRC 9455

◆[1] An alternative microorganism is *Kocuria rhizophila (Micrococcus luteus)* ATCC 9341.◆

◆[2] An alternative to *Clostridium sporogenes,* when a nonspore-forming microorganism is desired, is *Bacteroides vulgatus* (ATCC 8482).◆

The media used comply with the following tests, carried out before, or in parallel, with the test on the product to be examined.

Accessed from 167.78.4.19 by James Cumbie (ocean22) on Mon Sep 09 15:04:23 EDT 2013

Sterility

Incubate portions of the media for 14 days. No growth of microorganisms occurs.

Growth Promotion Test of Aerobes, Anaerobes, and Fungi

Test each lot of ready-prepared medium and each batch of medium prepared either from dehydrated medium or from ingredients. Suitable strains of microorganisms are indicated in *Table 1*.

Inoculate portions of *Fluid Thioglycollate Medium* with a small number (not more than 100 cfu) of the following microorganisms, using a separate portion of medium for each of the following species of microorganism: *Clostridium sporogenes*, *Pseudomonas aeruginosa*, and *Staphylococcus aureus*. ◆Inoculate portions of alternative thioglycollate medium with a small number (not more than 100 cfu) of *Clostridium sporogenes*.◆ Inoculate portions of *Soybean–Casein Digest Medium* with a small number (not more than 100 cfu) of the following microorganisms, using a separate portion of medium for each of the following species of microorganism: *Aspergillus brasiliensis*, *Bacillus subtilis,* and *Candida albicans*. Incubate for not more than 3 days in the case of bacteria and not more than 5 days in the case of fungi. Seed lot culture maintenance techniques (seed-lot systems) are used so that the viable microorganisms used for inoculation are not more than five passages removed from the original master seed-lot.

The media are suitable if a clearly visible growth of the microorganisms occurs.

◆DILUTING AND RINSING FLUIDS FOR MEMBRANE FILTRATION

Fluid A

PREPARATION

Dissolve 1 g of peptic digest of animal tissue in water to make 1 L, filter or centrifuge to clarify, if necessary, and adjust to a pH of 7.1 ± 0.2. Dispense into containers, and sterilize using a validated process.

PREPARATION FOR PENICILLINS OR CEPHALOSPORINS

Aseptically add to the above *Preparation*, if necessary, a quantity of sterile β-lactamase sufficient to inactivate any residual antibiotic activity on the membranes after the solution of the test specimen has been filtered (see *Media for Penicillins or Cephalosporins*).

Fluid D

To each L of *Fluid A* add 1 mL of polysorbate 80, adjust to a pH of 7.1 ± 0.2, dispense into containers, and sterilize using a validated process. Use this fluid for articles containing lecithin or oil, or for devices labeled as "sterile pathway."

Fluid K

Dissolve 5.0 g of peptic digest of animal tissue, 3.0 g of beef extract, and 10.0 g of polysorbate 80 in water to make 1 L. Adjust the pH to obtain, after sterilization, a pH of 6.9 ± 0.2. Dispense into containers, and sterilize using a validated process.◆

METHOD SUITABILITY TEST

Carry out a test as described below under *Test for Sterility of the Product to be Examined* using exactly the same methods, except for the following modifications.

Membrane Filtration

After transferring the content of the container or containers to be tested to the membrane, add an inoculum of a small number of viable microorganisms (not more than 100 cfu) to the final portion of sterile diluent used to rinse the filter.

Direct Inoculation

After transferring the contents of the container or containers to be tested (for catgut and other surgical sutures for veterinary use: strands) to the culture medium, add an inoculum of a small number of viable microorganisms (not more than 100 cfu) to the medium.

Copyright (c) 2013 The United States Pharmacopeial Convention. All rights reserved.

In both cases use the same microorganisms as those described above under *Growth Promotion Test of Aerobes, Anaerobes, and Fungi*. Perform a growth promotion test as a positive control. Incubate all the containers containing medium for not more than 5 days.

If clearly visible growth of microorganisms is obtained after the incubation, visually comparable to that in the control vessel without product, either the product possesses no antimicrobial activity under the conditions of the test or such activity has been satisfactorily eliminated. The test for sterility may then be carried out without further modification.

If clearly visible growth is not obtained in the presence of the product to be tested, visually comparable to that in the control vessels without product, the product possesses antimicrobial activity that has not been satisfactorily eliminated under the conditions of the test. Modify the conditions in order to eliminate the antimicrobial activity, and repeat the *Method Suitability Test*.

This method suitability is performed (a) when the test for sterility has to be carried out on a new product; and (b) whenever there is a change in the experimental conditions of the test. The method suitability may be performed simultaneously with the *Test for Sterility of the Product to be Examined*.

TEST FOR STERILITY OF THE PRODUCT TO BE EXAMINED

◆Number of Articles to Be Tested

Unless otherwise specified elsewhere in this chapter or in the individual monograph, test the number of articles specified in *Table 3*. If the contents of each article are of sufficient quantity (see *Table 2*), they may be divided so that equal appropriate portions are added to each of the specified media. [NOTE—Perform sterility testing employing two or more of the specified media.] If each article does not contain sufficient quantities for each medium, use twice the number of articles indicated in *Table 3*.◆

Table 2. Minimum Quantity to be Used for Each Medium

Quantity per Container	Minimum Quantity to be Used (unless otherwise justified and authorized)
Liquids	
Less than 1 mL	The whole contents of each container
1–40 mL	Half the contents of each container, but not less than 1 mL
Greater than 40 mL, and not greater than 100 mL	20 mL
Greater than 100 mL	10% of the contents of the container, but not less than 20 mL
Antibiotic liquids	1 mL
Insoluble preparations, creams, and ointments to be suspended or emulsified	Use the contents of each container to provide not less than 200 mg
Solids	
Less than 50 mg	The whole contents of each container
50 mg or more, but less than 300 mg	Half the contents of each container, but not less than 50 mg
300 mg–5 g	150 mg
Greater than 5 g	500 mg
Catgut and other surgical sutures for veterinary use	3 sections of a strand (each 30-cm long)
◆Surgical dressing/cotton/gauze (in packages)	100 mg per package
Sutures and other individually packaged single-use material	The whole device
Other medical devices	The whole device, cut into pieces or disassembled◆

Table 3. Minimum Number of Articles to be Tested in Relation to the Number of Articles in the Batch

Number of Items in the Batch*	Minimum Number of Items to be Tested for Each Medium (unless otherwise justified and authorized)**
Parenteral preparations	
Not more than 100 containers	10% or 4 containers, whichever is the greater
More than 100 but not more than 500 containers	10 containers
More than 500 containers	2% or 20 containers, whichever is less
◆*For large-volume parenterals*	2% or 10 containers, whichever is less
Antibiotic solids	
Pharmacy bulk packages (<5 g)	20 containers
Pharmacy bulk packages (≥5 g)	6 containers
Bulks and blends	See *Bulk solid products*◆
Ophthalmic and other noninjectable preparations	
Not more than 200 containers	5% or 2 containers, whichever is the greater

*If the batch size is unknown, use the maximum number of items prescribed.

**If the contents of one container are enough to inoculate the two media, this column gives the number of containers needed for both the media together.

Accessed from 167.78.4.19 by James Cumbie (ocean22) on Mon Sep 09 15:04:23 EDT 2013

Table 3. Minimum Number of Articles to be Tested in Relation to the Number of Articles in the Batch *(Continued)*

Number of Items in the Batch*	Minimum Number of Items to be Tested for Each Medium (unless otherwise justified and authorized)**
More than 200 containers	10 containers
If the product is presented in the form of single-dose containers, apply the scheme shown above for preparations for parenteral use.	
Catgut and other surgical sutures for veterinary use	2% or 5 packages, whichever is the greater, up to a maximum total of 20 packages
◆Not more than 100 articles	10% or 4 articles, whichever is greater
More than 100, but not more than 500 articles	10 articles
More than 500 articles	2% or 20 articles, whichever is less◆
Bulk solid products	
Up to 4 containers	Each container
More than 4 containers, but not more than 50 containers	20% or 4 containers, whichever is greater
More than 50 containers	2% or 10 containers, whichever is greater

*If the batch size is unknown, use the maximum number of items prescribed.
**If the contents of one container are enough to inoculate the two media, this column gives the number of containers needed for both the media together.

The test may be carried out using the technique of *Membrane Filtration* or by *Direct Inoculation of the Culture Medium* with the product to be examined. Appropriate negative controls are included. The technique of membrane filtration is used whenever the nature of the product permits; that is, for filterable aqueous preparations, for alcoholic or oily preparations, and for preparations miscible with, or soluble in, aqueous or oily solvents, provided these solvents do not have an antimicrobial effect in the conditions of the test.

Membrane Filtration

Use membrane filters having a nominal pore size not greater than 0.45 µm, in which the effectiveness to retain microorganisms has been established. Cellulose nitrate filters, for example, are used for aqueous, oily, and weakly alcoholic solutions; and cellulose acetate filters, for example, are used for strongly alcoholic solutions. Specially adapted filters may be needed for certain products (e.g., for antibiotics).

The technique described below assumes that membranes about 50 mm in diameter will be used. If filters of a different diameter are used, the volumes of the dilutions and the washings should be adjusted accordingly. The filtration apparatus and membrane are sterilized by appropriate means. The apparatus is designed so that the solution to be examined can be introduced and filtered under aseptic conditions: it permits the aseptic removal of the membrane for transfer to the medium, or it is suitable for carrying out the incubation after adding the medium to the apparatus itself.

AQUEOUS SOLUTIONS

If appropriate, transfer a small quantity of a suitable, sterile diluent such as ◆*Fluid A* (see *Diluting and Rinsing Fluids for Membrane Filtration*)◆ onto the membrane in the apparatus and filter. The diluent may contain suitable neutralizing substances and/or appropriate inactivating substances, for example, in the case of antibiotics.

Transfer the contents of the container or containers to be tested to the membrane or membranes, if necessary, after diluting to the volume used in the *Method Suitability Test* with the chosen sterile diluent, but using not less than the quantities of the product to be examined prescribed in *Tables 2* and *3*. Filter immediately. If the product has antimicrobial properties, wash the membrane not less than three times by filtering through it each time the volume of the chosen sterile diluent used in the *Method Suitability Test*. Do not exceed a washing cycle of five times 100 mL per filter, even if during method suitability it has been demonstrated that such a cycle does not fully eliminate the antimicrobial activity. Transfer the whole membrane to the culture medium or cut it aseptically into two equal parts, and transfer one half to each of two suitable media. Use the same volume of each medium as in the *Method Suitability Test*. Alternatively, transfer the medium onto the membrane in the apparatus. Incubate the media for not less than 14 days.

SOLUBLE SOLIDS

Use for each medium not less than the quantity prescribed in *Tables 2* and *3* of the product dissolved in a suitable solvent, such as the solvent provided with the preparation, Sterile Water for Injection, sterile saline, or a suitable sterile solution such as ◆*Fluid A* (*Diluting and Rinsing Fluids for Membrane Filtration*),◆ and proceed with the test as described above for *Aqueous Solutions* using a membrane appropriate to the chosen solvent.

OILS and OILY SOLUTIONS

Use for each medium not less than the quantity of the product prescribed in *Tables 2* and *3*. Oils and oily solutions of sufficiently low viscosity may be filtered without dilution through a dry membrane. Viscous oils may be diluted as necessary with a suitable sterile diluent such as isopropyl myristate shown not to have antimicrobial activity in the conditions of the test. Allow the oil to

Copyright (c) 2013 The United States Pharmacopeial Convention. All rights reserved.

penetrate the membrane by its own weight, and then filter, applying the pressure or suction gradually. Wash the membrane at least three times by filtering through it each time about 100 mL of a suitable sterile solution such as ◆*Fluid A* (see *Diluting and Rinsing Fluids for Membrane Filtration*)◆ containing a suitable emulsifying agent at a concentration shown to be appropriate in the *Method Suitability Test*, for example polysorbate 80 at a concentration of 10 g per L ◆(*Fluid K*)◆. Transfer the membrane or membranes to the culture medium or media, or vice versa, as described above for *Aqueous Solutions*, and incubate at the same temperatures and for the same times.

OINTMENTS and CREAMS

Use for each medium not less than the quantities of the product prescribed in *Tables 2* and *3*. Ointments in a fatty base and emulsions of the water-in-oil type may be diluted to 1% in isopropyl myristate as described above, by heating, if necessary, to not more than 40°. In exceptional cases it may be necessary to heat to not more than 44°. Filter as rapidly as possible, and proceed as described above for *Oils and Oily Solutions*.

◆PREFILLED SYRINGES

For prefilled syringes without attached sterile needles, expel the contents of each syringe into one or two separate membrane filter funnels or into separate pooling vessels prior to transfer. If a separate sterile needle is attached, directly expel the syringe contents as indicated above, and proceed as directed for *Aqueous Solutions*. Test the sterility of the needle, using *Direct Inoculation* under *Method Suitability Test*.

SOLIDS FOR INJECTION OTHER THAN ANTIBIOTICS

Constitute the test articles as directed on the label, and proceed as directed for *Aqueous Solutions* or *Oils and Oily Solutions*, whichever applies. [NOTE—If necessary, excess diluent can be added to aid in the constitution and filtration of the constituted test article.]

ANTIBIOTIC SOLIDS FOR INJECTION

Pharmacy Bulk Packages, <5 g—From each of 20 containers, aseptically transfer about 300 mg of solids, into a sterile 500-mL conical flask, dissolve in about 200 mL of *Fluid A* (see *Diluting and Rinsing Fluids for Membrane Filtration*), and mix; or constitute, as directed in the labeling, each of 20 containers and transfer a quantity of liquid or suspension, equivalent to about 300 mg of solids, into a sterile 500-mL conical flask, dissolve in about 200 mL of *Fluid A*, and mix. Proceed as directed for *Aqueous Solutions* or *Oils and Oily Solutions*, whichever applies.

Pharmacy Bulk Packages, ≥5 g—From each of 6 containers, aseptically transfer about 1 g of solids into a sterile 500-mL conical flask, dissolve in about 200 mL of *Fluid A*, and mix; or constitute, as directed in the labeling, each of 6 containers and transfer a quantity of liquid, equivalent to about 1 g of solids, into a sterile 500-mL conical flask, dissolve in about 200 mL of *Fluid A*, and mix. Proceed as directed for *Aqueous Solutions*.

ANTIBIOTIC SOLIDS, BULKS, and BLENDS

Aseptically remove a sufficient quantity of solids from the appropriate amount of containers (see *Table 2*), mix to obtain a composite, equivalent to about 6 g of solids, and transfer to a sterile 500-mL conical flask. Dissolve in about 200 mL of *Fluid A*, and mix. Proceed as directed for *Aqueous Solutions*.

STERILE AEROSOL PRODUCTS

For fluid products in pressurized aerosol form, freeze the containers in an alcohol-dry ice mixture at least at –20° for about 1 hour. If feasible, allow the propellant to escape before aseptically opening the container, and transfer the contents to a sterile pooling vessel. Add 100 mL of *Fluid D* to the pooling vessel, and mix gently. Proceed as directed for *Aqueous Solutions* or *Oils and Oily Solutions*, whichever applies.

DEVICES WITH PATHWAYS LABELED STERILE

Aseptically pass not less than 10 pathway volumes of *Fluid D* through each device tested. Collect the fluids in an appropriate sterile vessel, and proceed as directed for *Aqueous Solutions* or *Oils and Oily Solutions*, whichever applies.

In the case of sterile, empty syringes, draw sterile diluent into the barrel through the sterile needle, if attached, or through a sterile needle attached for the purpose of the test, and express the contents into a sterile pooling vessel. Proceed as directed above.◆

Accessed from 167.78.4.19 by James Cumbie (ocean22) on Mon Sep 09 15:04:23 EDT 2013

Direct Inoculation of the Culture Medium

Transfer the quantity of the preparation to be examined prescribed in *Tables 2* and *3* directly into the culture medium so that the volume of the product is not more than 10% of the volume of the medium, unless otherwise prescribed.

If the product to be examined has antimicrobial activity, carry out the test after neutralizing this with a suitable neutralizing substance or by dilution in a sufficient quantity of culture medium. When it is necessary to use a large volume of the product, it may be preferable to use a concentrated culture medium prepared in such a way that it takes into account the subsequent dilution. Where appropriate, the concentrated medium may be added directly to the product in its container.

OILY LIQUIDS

Use media to which have been added a suitable emulsifying agent at a concentration shown to be appropriate in the *Method Suitability Test,* for example polysorbate 80 at a concentration of 10 g per L.

OINTMENTS and CREAMS

Prepare by diluting to about 1 in 10 by emulsifying with the chosen emulsifying agent in a suitable sterile diluent such as ◆*Fluid A* (see *Diluting and Rinsing Fluids for Membrane Filtration*).◆ Transfer the diluted product to a medium not containing an emulsifying agent.

Incubate the inoculated media for not less than 14 days. Observe the cultures several times during the incubation period. Shake cultures containing oily products gently each day. However, when *Fluid Thioglycollate Medium* is used for the detection of anaerobic microorganisms, keep shaking or mixing to a minimum in order to maintain anaerobic conditions.

CATGUT and OTHER SURGICAL SUTURES FOR VETERINARIAN USE

Use for each medium not less than the quantities of the product prescribed in *Tables 2* and *3*. Open the sealed package using aseptic precautions, and remove three sections of the strand for each culture medium. Carry out the test on three sections, each 30-cm long, which have been cut off from the beginning, the center, and the end of the strand. Use whole strands from freshly opened cassette packs. Transfer each section of the strand to the selected medium. Use sufficient medium to cover adequately the material to be tested (20 mL to 150 mL).

◆SOLIDS

Transfer a quantity of the product in the form of a dry solid (or prepare a suspension of the product by adding sterile diluent to the immediate container), corresponding to not less than the quantity indicated in *Tables 2* and *3*. Transfer the material so obtained to 200 mL of *Fluid Thioglycollate Medium,* and mix. Similarly, transfer the same quantity to 200 mL of *Soybean–Casein Digest Medium,* and mix. Proceed as directed above.

PURIFIED COTTON, GAUZE, SURGICAL DRESSINGS, and RELATED ARTICLES

From each package of cotton, rolled gauze bandage, or large surgical dressings being tested, aseptically remove two or more portions of 100- to 500-mg each from the innermost part of the sample. From individually packaged, single-use materials, aseptically remove the entire article. Immerse the portions or article in each medium, and proceed as directed above.

STERILE DEVICES

Articles can be immersed intact or disassembled. To ensure that device pathways are also in contact with the media, immerse the appropriate number of units per medium in a volume of medium sufficient to immerse the device completely, and proceed as directed above. For extremely large devices, immerse those portions of the device that are to come into contact with the patient in a volume of medium sufficient to achieve complete immersion of those portions.

For catheters where the inside lumen and outside are required to be sterile, either cut them into pieces such that the medium is in contact with the entire lumen or fill the lumen with medium, and then immerse the intact unit.◆

OBSERVATION AND INTERPRETATION OF RESULTS

At intervals during the incubation period and at its conclusion, examine the media for macroscopic evidence of microbial growth. If the material being tested renders the medium turbid so that the presence or absence of microbial growth cannot be readily determined by visual examination, 14 days after the beginning of incubation transfer portions (each not less than 1 mL) of the medium to fresh vessels of the same medium, and then incubate the original and transfer vessels for not less than 4 days.

If no evidence of microbial growth is found, the product to be examined complies with the test for sterility. If evidence of microbial growth is found, the product to be examined does not comply with the test for sterility, unless it can be clearly demon-

Copyright (c) 2013 The United States Pharmacopeial Convention. All rights reserved.

strated that the test was invalid for causes unrelated to the product to be examined. The test may be considered invalid only if one or more of the following conditions are fulfilled:

a. The data of the microbiological monitoring of the sterility testing facility show a fault.
b. A review of the testing procedure used during the test in question reveals a fault.
c. Microbial growth is found in the negative controls.
d. After determination of the identity of the microorganisms isolated from the test, the growth of this species (or these species) may be ascribed unequivocally to faults with respect to the material and or the technique used in conducting the sterility test procedure.

If the test is declared to be invalid, it is repeated with the same number of units as in the original test. If no evidence of microbial growth is found in the repeat test, the product examined complies with the test for sterility. If microbial growth is found in the repeat test, the product examined does not comply with the test for sterility.

APPLICATION OF THE TEST TO PARENTERAL PREPARATIONS, OPHTHALMIC, AND OTHER NONINJECTABLE PREPARATIONS REQUIRED TO COMPLY WITH THE TEST FOR STERILITY

When using the technique of membrane filtration, use, whenever possible, the whole contents of the container, but not less than the quantities indicated in *Table 2,* diluting where necessary to about 100 mL with a suitable sterile solution, such as ◆*Fluid A* (see *Diluting and Rinsing Fluids for Membrane Filtration*).◆

When using the technique of direct inoculation of media, use the quantities shown in *Table 2,* unless otherwise justified and authorized. The tests for bacterial and fungal sterility are carried out on the same sample of the product to be examined. When the volume or the quantity in a single container is insufficient to carry out the tests, the contents of two or more containers are used to inoculate the different media.

MINIMUM NUMBER OF ITEMS TO BE TESTED

The minimum number of items to be tested in relation to the size of the batch is given in *Table 3*.

⟨85⟩ BACTERIAL ENDOTOXINS TEST

◆Portions of this general chapter have been harmonized with the corresponding texts of the *European Pharmacopoeia* and/or the *Japanese Pharmacopoeia*. Those portions that are not harmonized are marked with symbols (◆◆) to specify this fact.◆

The Bacterial Endotoxins Test (BET) is a test to detect or quantify endotoxins from Gram-negative bacteria using amoebocyte lysate from the horseshoe crab (*Limulus polyphemus* or *Tachypleus tridentatus*).

There are three techniques for this test: the gel-clot technique, which is based on gel formation; the turbidimetric technique, based on the development of turbidity after cleavage of an endogenous substrate; and the chromogenic technique, based on the development of color after cleavage of a synthetic peptide-chromogen complex. Proceed by any of the three techniques for the test. In the event of doubt or dispute, the final decision is made based upon the gel-clot limit test unless otherwise indicated in the monograph for the product being tested. The test is carried out in a manner that avoids endotoxin contamination.

APPARATUS

Depyrogenate all glassware and other heat-stable materials in a hot air oven using a validated process.◆[1]◆ A commonly used minimum time and temperature is 30 min at 250°. If employing plastic apparatus, such as microplates and pipet tips for automatic pipetters, use apparatus that is shown to be free of detectable endotoxin and does not interfere in the test. [NOTE—In this chapter, the term "tube" includes any other receptacle such as a microtiter well.]

REAGENTS AND TEST SOLUTIONS

Amoebocyte Lysate—A lyophilized product obtained from the lysate of amoebocytes (white blood cells) from the horseshoe crab (*Limulus polyphemus* or *Tachypleus tridentatus*). This reagent refers only to a product manufactured in accordance with the regulations of the competent authority. [NOTE—*Amoebocyte Lysate* reacts to some β-glucans in addition to endotoxins. *Amoebocyte Lysate* preparations that do not react to glucans are available: they are prepared by removing the G factor reacting to glucans from *Amoebocyte Lysate* or by inhibiting the G factor reacting system of *Amoebocyte Lysate* and may be used for endotoxin testing in the presence of glucans.]

Water for Bacterial Endotoxins Test (BET)—Use Water for Injection or water produced by other procedures that shows no reaction with the lysate employed, at the detection limit of the reagent.

◆[1] For a validity test of the procedure for inactivating endotoxins, see *Dry-Heat Sterilization* under *Sterilization and Sterility Assurance of Compendial Articles* ⟨1211⟩. Use *Lysate TS* having a sensitivity of not less than 0.15 Endotoxin Unit per mL.◆

Accessed from 167.78.4.19 by James Cumbie (ocean22) on Mon Sep 09 15:04:23 EDT 2013

Lysate TS—Dissolve *Amoebocyte Lysate* in *Water for BET*, or in a buffer recommended by the lysate manufacturer, by gentle stirring. Store the reconstituted lysate, refrigerated or frozen, according to the specifications of the manufacturer.

PREPARATION OF SOLUTIONS

Standard Endotoxin Stock Solution—A *Standard Endotoxin Stock Solution* is prepared from a USP Endotoxin Reference Standard that has been calibrated to the current WHO International Standard for Endotoxin. Follow the specifications in the package leaflet and on the label for preparation and storage of the *Standard Endotoxin Stock Solution*. Endotoxin is expressed in Endotoxin Units (EU). [NOTE—One USP Endotoxin Unit (EU) is equal to one International Unit (IU) of endotoxin.]

Standard Endotoxin Solutions—After mixing the *Standard Endotoxin Stock Solution* vigorously, prepare appropriate serial dilutions of *Standard Endotoxin Solution*, using *Water for BET*. Use dilutions as soon as possible to avoid loss of activity by adsorption.

Sample Solutions—Prepare the *Sample Solutions* by dissolving or diluting drugs using *Water for BET*. Some substances or preparations may be more appropriately dissolved, or diluted in other aqueous solutions. If necessary, adjust the pH of the solution to be examined (or dilution thereof) so that the pH of the mixture of the lysate and *Sample Solution* falls within the pH range specified by the lysate manufacturer, usually 6.0–8.0. The pH may be adjusted by use of an acid, base, or suitable buffer as recommended by the lysate manufacturer. Acids and bases may be prepared from concentrates or solids with *Water for BET* in containers free of detectable endotoxin. Buffers must be validated to be free of detectable endotoxin and interfering factors.

DETERMINATION OF MAXIMUM VALID DILUTION (MVD)

The maximum valid dilution is the maximum allowable dilution of a specimen at which the endotoxin limit can be determined. Determine the MVD from the following equation:

$$\text{MVD} = (\text{endotoxin limit} \times \text{concentration of } \textit{Sample Solution})/(\lambda)$$

Endotoxin Limit—The endotoxin limit for parenteral drugs, defined on the basis of dose, equals K/M[◆2◆], where K is a threshold pyrogenic dose of endotoxin per kg of body weight, and M is equal to the maximum recommended bolus dose of product per kg of body weight. When the product is to be injected at frequent intervals or infused continuously, M is the maximum total dose administered in a single hour period. The endotoxin limit for parenteral drugs is specified in the individual monograph in units such as EU/mL, EU/mg, EU/Unit of biological activity, etc.

Concentration of Sample Solution—

mg/mL: in the case of endotoxin limit specified by weight (EU/mg);

Units/mL: in the case of endotoxin limit specified by unit of biological activity (EU/Unit);

mL/mL: when the endotoxin limit is specified by volume (EU/mL).

λ: the labeled sensitivity in the *Gel-Clot Technique* (EU/mL) or the lowest concentration used in the standard curve for the *Turbidimetric Technique* or *Chromogenic Technique*.

GEL-CLOT TECHNIQUE

The gel-clot technique is used for detecting or quantifying endotoxins based on clotting of the lysate reagent in the presence of endotoxin. The minimum concentration of endotoxin required to cause the lysate to clot under standard conditions is the labeled sensitivity of the lysate reagent. To ensure both the precision and validity of the test, perform the tests for confirming the labeled lysate sensitivity and for interfering factors as described in *Preparatory Testing*, immediately below.

Preparatory Testing

Test for Confirmation of Labeled Lysate Sensitivity—Confirm in four replicates the labeled sensitivity, λ, expressed in EU/mL of the lysate prior to use in the test. The test for confirmation of lysate sensitivity is to be carried out when a new batch of lysate is used or when there is any change in the test conditions that may affect the outcome of the test. Prepare standard solutions having at least four concentrations equivalent to 2λ, λ, 0.5λ, and 0.25λ by diluting the USP Endotoxin RS with *Water for BET*.

Mix a volume of the *Lysate TS* with an equal volume (such as 0.1-mL aliquots) of one of the *Standard Endotoxin Solutions* in each test tube. When single test vials or ampuls containing lyophilized lysate are used, add solutions directly to the vial or ampul. Incubate the reaction mixture for a constant period according to the directions of the lysate manufacturer (usually at 37 ± 1° for 60 ± 2 min), avoiding vibration. To test the integrity of the gel, take each tube in turn directly from the incubator, and invert it through about 180° in one smooth motion. If a firm gel has formed that remains in place upon inversion, record the result as positive. A result is negative if an intact gel is not formed. The test is considered valid when the lowest concentration of the standard solutions shows a negative result in all replicate tests.

◆2 K is 5 USP-EU/kg of body weight for any route of administration other than intrathecal (for which K is 0.2 USP-EU/kg of body weight). For radiopharmaceutical products not administered intrathecally, the endotoxin limit is calculated as 175 EU/V, where V is the maximum recommended dose in mL. For intrathecally administered radiopharmaceuticals, the endotoxin limit is obtained by the formula 14 EU/V. For formulations (usually anticancer products) administered on a per square meter of body surface, the formula is K/M, where K = 100 EU/m² and M is the maximum dose/m².◆

Copyright (c) 2013 The United States Pharmacopeial Convention. All rights reserved.

The endpoint is the smallest concentration in the series of decreasing concentrations of standard endotoxin that clots the lysate. Determine the geometric mean endpoint by calculating the mean of the logarithms of the endpoint concentrations of the four replicate series and then taking the antilogarithm of the mean value, as indicated in the following formula:

$$\text{geometric mean endpoint concentration} = \text{antilog}\ (\Sigma e/f)$$

where Σe is the sum of the log endpoint concentrations of the dilution series used, and f is the number of replicate test tubes. The geometric mean endpoint concentration is the measured sensitivity of the lysate (in EU/mL). If this is not less than 0.5λ and not more than 2λ, the labeled sensitivity is confirmed and is used in tests performed with this lysate.

Test for Interfering Factors—Usually prepare solutions *(A–D)* as shown in *Table 1*, and perform the inhibition/enhancement test on the *Sample Solutions* at a dilution less than the MVD, not containing any detectable endotoxins, operating as described for *Test for Confirmation of Labeled Lysate Sensitivity.* The geometric mean endpoint concentrations of *Solutions B* and *C* are determined using the formula described in the *Test for Confirmation of Labeled Lysate Sensitivity.* The test for interfering factors must be repeated when any condition changes that is likely to influence the result of the test.

Table 1. Preparation of Solutions for the Inhibition/Enhancement Test for Gel-Clot Techniques

Solution	Endotoxin Concentration/ Solution to Which Endotoxin Is Added	Diluent	Dilution Factor	Endotoxin Concentration	Number of Replicates
A[a]	None/*Sample Solution*	—	—	—	4
B[b]	2λ/*Sample Solution*	*Sample Solution*	1	2λ	4
			2	1λ	4
			4	0.5λ	4
			8	0.25λ	4
C[c]	2λ/*Water for BET*	*Water for BET*	1	2λ	2
			2	1λ	2
			4	0.5λ	2
			8	0.25λ	2
D[d]	None/*Water for BET*	—	—	—	2

[a] *Solution A*: A *Sample Solution* of the preparation under test that is free of detectable endotoxins.
[b] *Solution B*: Test for interference.
[c] *Solution C*: Control for labeled lysate sensitivity.
[d] *Solution D*: Negative control of *Water for BET.*

The test is considered valid when all replicates of *Solutions A* and *D* show no reaction and the result of *Solution C* confirms the labeled sensitivity.

If the sensitivity of the lysate determined in the presence of *Solution B* is not less than 0.5λ and not greater than 2λ, the *Sample Solution* does not contain factors that interfere under the experimental conditions used. Otherwise, the *Sample Solution* to be examined interferes with the test.

If the sample under test does not comply with the test at a dilution less than the MVD, repeat the test using a greater dilution, not exceeding the MVD. The use of a more sensitive lysate permits a greater dilution of the sample to be examined, and this may contribute to the elimination of interference.

Interference may be overcome by suitable treatment such as filtration, neutralization, dialysis, or heating. To establish that the chosen treatment effectively eliminates interference without loss of endotoxins, perform the assay described above using the preparation to be examined to which Standard Endotoxin has been added and which has then been submitted to the chosen treatment.

Limit Test

Procedure—Prepare *Solutions A, B, C,* and *D* as shown in *Table 2*, and perform the test on these solutions following the procedure above for *Preparatory Testing*, *Test for Confirmation of Labeled Lysate Sensitivity.*

Table 2. Preparation of Solutions for the Gel-Clot Limit Test

Solution*	Endotoxin Concentration/ Solution to Which Endotoxin Is Added	Number of Replicates
A	None/Diluted *Sample Solution*	2
B	2λ/Diluted *Sample Solution*	2
C	2λ/*Water for BET*	2
D	None/*Water for BET*	2

* Prepare *Solution A* and the positive product control *Solution B* using a dilution not greater than the MVD and treatments as described for the *Test for Interfering Factors* in *Preparatory Testing*. The positive control *Solutions B* and *C* contain the *Standard Endotoxin Solution* at a concentration corresponding to twice the labeled lysate sensitivity. The negative control *Solution D* consists of *Water for BET.*

Accessed from 167.78.4.19 by James Cumbie (ocean22) on Mon Sep 09 15:04:23 EDT 2013

Interpretation—The test is considered valid when both replicates of *Solutions B* and *C* are positive and those of *Solution D* are negative. When a negative result is found for both replicates of *Solution A*, the preparation under test complies with the test. When a positive result is found for both replicates of *Solution A*, the preparation under test does not comply with the test.

When a positive result is found for one replicate of *Solution A* and a negative result is found for the other, repeat the test. In the repeat test, the preparation under test complies with the test if a negative result is found for both replicates of *Solution A*. The preparation does not comply with the test if a positive result is found for one or both replicates of *Solution A*. However, if the preparation does not comply with the test at a dilution less than the MVD, the test may be repeated using a greater dilution, not exceeding the MVD.

Quantitative Test

Procedure—The test quantifies bacterial endotoxins in *Sample Solutions* by titration to an endpoint. Prepare *Solutions A, B, C,* and *D* as shown in *Table 3*, and test these solutions by following the procedure in *Preparatory Testing*, *Test for Confirmation of Labeled Lysate Sensitivity.*

Calculation and Interpretation—The test is considered valid when the following three conditions are met: (1) Both replicates of negative control *Solution D* are negative; (2) Both replicates of positive product control *Solution B* are positive; and (3) The geometric mean endpoint concentration of *Solution C* is in the range of 0.5λ to 2λ.

To determine the endotoxin concentration of *Solution A*, calculate the endpoint concentration for each replicate by multiplying each endpoint dilution factor by λ. The endotoxin concentration in the *Sample Solution* is the endpoint concentration of the replicates. If the test is conducted with a diluted *Sample Solution*, calculate the concentration of endotoxin in the original *Sample Solution* by multiplying by the dilution factor. If none of the dilutions of the *Sample Solution* is positive in a valid assay, report the endotoxin concentration as less than λ (if the diluted sample was tested, report as less than λ times the lowest dilution factor of the sample). If all dilutions are positive, the endotoxin concentration is reported as equal to or greater than the greatest dilution factor multiplied by λ (e.g., initial dilution factor times eight times λ in *Table 3*).

The preparation under test meets the requirements of the test if the concentration of endotoxin in both replicates is less than that specified in the individual monograph.

PHOTOMETRIC QUANTITATIVE TECHNIQUES

Turbidimetric Technique

This technique is a photometric assay measuring increases in reactant turbidity. On the basis of the particular assay principle employed, this technique may be classified as either an endpoint-turbidimetric assay or a kinetic-turbidimetric assay. The endpoint-turbidimetric assay is based on the quantitative relationship between the concentration of endotoxins and the turbidity (absorbance or transmission) of the reaction mixture at the end of an incubation period. The kinetic-turbidimetric assay is a method to measure either the time (onset time) needed to reach a predetermined absorbance or transmission of the reaction mixture, or the rate of turbidity development. The test is carried out at the incubation temperature recommended by the lysate manufacturer (which is usually 37 ± 1°).

Table 3. Preparation of Solutions for the Gel-Clot Assay

Solution	Endotoxin Concentration/ Solution to Which Endotoxin Is Added	Diluent	Dilution Factor	Endotoxin Concentration	Number of Replicates
A[a]	None/*Sample Solution*	*Water for BET*	1	—	2
			2	—	2
			4	—	2
			8	—	2
B[b]	2λ/*Sample Solution*	—	1	2λ	2
C[c]	2λ/*Water for BET*	*Water for BET*	1	2λ	2
			2	1λ	2
			4	0.5λ	2
			8	0.25λ	2
D[d]	None/*Water for BET*	—	—	—	2

[a] *Solution A*: *Sample Solution* under test at the dilution, not to exceed the MVD, with which the *Test for Interfering Factors* was completed. Subsequent dilution of the *Sample Solution* must not exceed the MVD. Use *Water for BET* to make a dilution series of four tubes containing the *Sample Solution* under test at concentrations of 1, 1/2, 1/4, and 1/8 relative to the concentration used in the *Test for Interfering Factors*. Other dilutions up to the MVD may be used as appropriate.

[b] *Solution B*: *Solution A* containing standard endotoxin at a concentration of 2λ (positive product control).

[c] *Solution C*: Two replicates of four tubes of *Water for BET* containing the standard endotoxin at concentrations of 2λ, λ, 0.5λ, and 0.25λ, respectively.

[d] *Solution D*: *Water for BET* (negative control).

Copyright (c) 2013 The United States Pharmacopeial Convention. All rights reserved.

Chromogenic Technique

This technique is an assay to measure the chromophore released from a suitable chromogenic peptide by the reaction of endotoxins with lysate. On the basis of the particular assay principle employed, this technique may be classified as either an endpoint-chromogenic assay or a kinetic-chromogenic assay. The endpoint-chromogenic assay is based on the quantitative relationship between the concentration of endotoxins and the release of chromophore at the end of an incubation period. The kinetic-chromogenic assay is a method to measure either the time (onset time) needed to reach a predetermined absorbance of the reaction mixture, or the rate of color development. The test is carried out at the incubation temperature recommended by the lysate manufacturer (which is usually 37 ± 1°).

Preparatory Testing

To assure the precision or validity of the turbidimetric and chromogenic techniques, preparatory tests are conducted to verify that the criteria for the standard curve are valid and that the sample solution does not interfere with the test. Validation for the test method is required when conditions that are likely to influence the test result change.

Assurance of Criteria for the Standard Curve—The test must be carried out for each lot of lysate reagent. Using the *Standard Endotoxin Solution,* prepare at least three endotoxin concentrations within the range indicated by the lysate manufacturer to generate the standard curve. Perform the assay using at least three replicates of each standard endotoxin concentration according to the manufacturer's instructions for the lysate (volume ratios, incubation time, temperature, pH, etc.). If the desired range is greater than two logs in the kinetic methods, additional standards should be included to bracket each log increase in the range of the standard curve. The absolute value of the correlation coefficient, *r*, must be greater than or equal to 0.980 for the range of endotoxin concentrations set up.

Test for Interfering Factors—Select an endotoxin concentration at or near the middle of the endotoxin standard curve. Prepare *Solutions A, B, C,* and *D* as shown in *Table 4*. Perform the test on *Solutions A, B, C,* and *D* at least in duplicate, according to the instructions for the lysate employed, for example, concerning volume of *Sample Solution* and *Lysate TS,* volume ratio of *Sample Solution* to *Lysate TS,* incubation time, etc.

The test is considered valid when the following conditions are met.

1. The absolute value of the correlation coefficient of the standard curve generated using *Solution C* is greater than or equal to 0.980.
2. The result with *Solution D* does not exceed the limit of the blank value required in the description of the lysate reagent employed, or it is less than the endotoxin detection limit of the lysate reagent employed.

Calculate the mean recovery of the added endotoxin by subtracting the mean endotoxin concentration in the solution, if any (*Solution A*, *Table 4*), from that containing the added endotoxin (*Solution B*, *Table 4*). In order to be considered free of factors that interfere with the assay under the conditions of the test, the measured concentration of the endotoxin added to the *Sample Solution* must be within 50%–200% of the known added endotoxin concentration after subtraction of any endotoxin detected in the solution without added endotoxin.

When the endotoxin recovery is out of the specified range, the *Sample Solution* under test is considered to contain interfering factors. Then, repeat the test using a greater dilution, not exceeding the MVD. Furthermore, interference of the *Sample Solution* or diluted *Sample Solution* not to exceed the MVD may be eliminated by suitable validated treatment such as filtration, neutralization, dialysis, or heat treatment. To establish that the chosen treatment effectively eliminates interference without loss of endotoxins, perform the assay described above, using the preparation to be examined to which Standard Endotoxin has been added and which has then been submitted to the chosen treatment.

Test Procedure

Follow the procedure described for *Test for Interfering Factors* under *Preparatory Testing*, immediately above.

Table 4. Preparation of Solutions for the Inhibition/Enhancement Test for Photometric Techniques

Solution	Endotoxin Concentration	Solution to Which Endotoxin Is Added	Number of Replicates
A[a]	None	*Sample Solution*	Not less than 2
B[b]	Middle concentration of the standard curve	*Sample Solution*	Not less than 2
C[c]	At least three concentrations (lowest concentration is designated λ)	*Water for BET*	Each not less than 2
D[d]	None	*Water for BET*	Not less than 2

[a] *Solution A*: The *Sample Solution* may be diluted not to exceed MVD.
[b] *Solution B*: The preparation under test at the same dilution as *Solution A,* containing added endotoxin at a concentration equal to or near the middle of the standard curve.
[c] *Solution C*: The standard endotoxin at the concentrations used in the validation of the method described for *Assurance of Criteria for the Standard Curve* under *Preparatory Testing* (positive controls).
[d] *Solution D*: *Water for BET* (negative control).

Accessed from 167.78.4.19 by James Cumbie (ocean22) on Mon Sep 09 15:04:23 EDT 2013

Calculation

Calculate the endotoxin concentration of each of the replicates of *Solution A*, using the standard curve generated by the positive control *Solution C*. The test is considered valid when the following three requirements are met.

1. The results of the control *Solution C* comply with the requirements for validation defined for *Assurance of Criteria for the Standard Curve* under *Preparatory Testing*.
2. The endotoxin recovery, calculated from the concentration found in *Solution B* after subtracting the concentration of endotoxin found in *Solution A*, is within the range of 50%–200%.
3. The result of the negative control *Solution D* does not exceed the limit of the blank value required in the description of the lysate employed, or it is less than the endotoxin detection limit of the lysate reagent employed.

Interpretation

In photometric assays, the preparation under test complies with the test if the mean endotoxin concentration of the replicates of *Solution A*, after correction for dilution and concentration, is less than the endotoxin limit for the product.

⟨151⟩ PYROGEN TEST

The pyrogen test is designed to limit to an acceptable level the risks of febrile reaction in the patient to the administration, by injection, of the product concerned. The test involves measuring the rise in temperature of rabbits following the intravenous injection of a test solution and is designed for products that can be tolerated by the test rabbit in a dose not to exceed 10 mL per kg injected intravenously within a period of not more than 10 minutes. For products that require preliminary preparation or are subject to special conditions of administration, follow the additional directions given in the individual monograph or, in the case of antibiotics or biologics, the additional directions given in the federal regulations (see *Biologics* ⟨1041⟩).

APPARATUS AND DILUENTS

Render the syringes, needles, and glassware free from pyrogens by heating at 250° for not less than 30 minutes or by any other suitable method. Treat all diluents and solutions for washing and rinsing of devices or parenteral injection assemblies in a manner that will assure that they are sterile and pyrogen-free. Periodically perform control pyrogen tests on representative portions of the diluents and solutions for washing or rinsing of the apparatus. Where Sodium Chloride Injection is specified as a diluent, use Injection containing 0.9 percent of NaCl.

TEMPERATURE RECORDING

Use an accurate temperature-sensing device such as a clinical thermometer, or thermistor probes or similar probes that have been calibrated to assure an accuracy of ±0.1° and have been tested to determine that a maximum reading is reached in less than 5 minutes. Insert the temperature-sensing probe into the rectum of the test rabbit to a depth of not less than 7.5 cm, and, after a period of time not less than that previously determined as sufficient, record the rabbit's body temperature.

TEST ANIMALS

Use healthy, mature rabbits. House the rabbits individually in an area of uniform temperature between 20° and 23° and free from disturbances likely to excite them. The temperature varies not more than ±3° from the selected temperature. Before using a rabbit for the first time in a pyrogen test, condition it not more than seven days before use by a sham test that includes all of the steps as directed for *Procedure* except injection. Do not use a rabbit for pyrogen testing more frequently than once every 48 hours, nor prior to 2 weeks following a maximum rise of its temperature of 0.6° or more while being subjected to the pyrogen test, or following its having been given a test specimen that was adjudged pyrogenic.

PROCEDURE

Perform the test in a separate area designated solely for pyrogen testing and under environmental conditions similar to those under which the animals are housed and free from disturbances likely to excite them. Withhold all food from the rabbits used during the period of the test. Access to water is allowed at all times, but may be restricted during the test. If rectal temperature-measuring probes remain inserted throughout the testing period, restrain the rabbits with light-fitting neck stocks that allow the rabbits to assume a natural resting posture. Not more than 30 minutes prior to the injection of the test dose, determine the "control temperature" of each rabbit: this is the base for the determination of any temperature increase resulting from the injection of a test solution. In any one group of test rabbits, use only those rabbits whose control temperatures do not vary by more than 1° from each other, and do not use any rabbit having a temperature exceeding 39.8°.

Copyright (c) 2013 The United States Pharmacopeial Convention. All rights reserved.

Unless otherwise specified in the individual monograph, inject into an ear vein of each of three rabbits 10 mL of the test solution per kg of body weight, completing each injection within 10 minutes after start of administration. The test solution is *either* the product, constituted if necessary as directed in the labeling, *or* the material under test treated as directed in the individual monograph and injected in the dose specified therein. For pyrogen testing of devices or injection assemblies, use washings or rinsings of the surfaces that come in contact with the parenterally administered material or with the injection site or internal tissues of the patient. Assure that all test solutions are protected from contamination. Perform the injection after warming the test solution to a temperature of 37 ± 2°. Record the temperature at 30-minute intervals between 1 and 3 hours subsequent to the injection.

TEST INTERPRETATION AND CONTINUATION

Consider any temperature decreases as zero rise. If no rabbit shows an individual rise in temperature of 0.5° or more above its respective control temperature, the product meets the requirements for the absence of pyrogens. If any rabbit shows an individual temperature rise of 0.5° or more, continue the test using five other rabbits. If not more than three of the eight rabbits show individual rises in temperature of 0.5° or more and if the sum of the eight individual maximum temperature rises does not exceed 3.3°, the material under examination meets the requirements for the absence of pyrogens.

RADIOACTIVE PHARMACEUTICALS

Test Dose for Preformulated, Ready-to-Use Products Labeled with Radioactivity

AGGREGATED ALBUMIN and OTHER PARTICLE-CONTAINING PRODUCTS

For the rabbit pyrogen test, dilute the product with Sodium Chloride Injection to not less than 100 µCi per mL, and inject a dose of 3 mL per kg of body weight into each rabbit.

OTHER PRODUCTS

Where Physical Half-life of Radionuclide Is Greater Than 1 Day—Calculate the maximum volume of the product that might be injected into a human subject. This calculation takes into account the maximum recommended radioactive dose of the product, in µCi, and the radioactive assay, in µCi per mL, of the product at its expiration date or time. Using this information, calculate the maximum volume dose per kg to a 70-kg human subject.

For the rabbit pyrogen test, inject a minimum of 10 times this dose per kg of body weight into each rabbit. If necessary, dilute with Sodium Chloride Injection. The total injected volume per rabbit is not less than 1 mL and not more than 10 mL of solution.

Where Physical Half-life of Radionuclide is Less Than 1 Day—For products labeled with radionuclides having a half-life of less than 1 day, the dosage calculations are identical to those described in the first paragraph under *Other Products.* These products may be released for distribution prior to completion of the rabbit pyrogen test, but such test shall be initiated at not more than 36 hours after release.

Test Dose for Pharmaceutical Constituents or Reagents to Be Labeled

The following test dose requirements pertain to reagents that are to be labeled or constituted prior to use by the direct addition of radioactive solutions such as Sodium Pertechnetate Tc 99m Injection, i.e., "cold kits".

Assume that the entire contents of the vial of nonradioactive reagent will be injected into a 70-kg human subject, or that $^{1}/_{70}$ of the total contents per kg will be injected. If the contents are dry, constitute with a measured volume of Sodium Chloride Injection.

For the rabbit pyrogen test, inject ($^{1}/_{7}$) of the vial contents per kg of body weight into each rabbit. The maximum dose per rabbit is the entire contents of a single vial. The total injected volume per rabbit is not less than 1 mL and not more than 10 mL of solution.

⟨381⟩ ELASTOMERIC CLOSURES FOR INJECTIONS

INTRODUCTION

Elastomeric closures for containers used in the types of preparations defined in the general test chapter *Injections* ⟨1⟩ are made of materials obtained by vulcanization (cross-linking) polymerization, polyaddition, or polycondensation of macromolecular organic

Accessed from 167.78.4.19 by James Cumbie (ocean22) on Mon Sep 09 15:04:23 EDT 2013

substances (elastomers). Closure formulations contain natural or synthetic elastomers and inorganic and organic additives to aid or control vulcanization, impart physical and chemical properties or color, or stabilize the closure formulation.

This chapter applies to closures used for long-term storage of preparations defined in the general test chapter *Injections* ⟨1⟩. Such closures are typically used as part of a vial, bottle, or pre-fill syringe package system.

This chapter applies to closures formulated with natural or synthetic elastomeric substances. This chapter does not apply to closures made from silicone elastomer; however, it does apply to closures treated with silicone (e.g., Dimethicone, *NF*). When performing the tests in this chapter, it is not required that closures be treated with silicone, although there is no restriction prohibiting the use of siliconized closures.

This chapter also applies to closures coated with other lubricious materials (e.g., materials chemically or mechanically bonded to the closure) that are not intended to, and in fact do not provide, a barrier to the base elastomer. When performing the tests, closures with lubricious nonbarrier coatings are to be tested in their coated state.

The following comments relate solely to closures laminated or coated with materials intended to provide, or in fact function as, a barrier to the base elastomer (e.g., PTFE or lacquer coatings). It is not permissible to use a barrier material in an attempt to change a closure that does not meet compendial requirements to one that does conform. Therefore, all *Physicochemical Tests* apply to the base formula of such closures, as well as to the coated or laminated closure. To obtain *Physicochemical Tests* results, the tests are to be performed on uncoated or nonlaminated closures of the same elastomeric compound, as well as to the laminated or coated closure. The *Functionality Tests* apply to and are to be performed using the laminated or coated elastomeric closure. *Biological Tests* apply to the lamination or coating material, as well as to the base formula. *Biological Tests* may be performed on the laminated or coated closure, or they may be performed on the laminate/coating material and the uncoated or nonlaminated closures of the same elastomeric compound. In the latter case, the results are to be reported separately. The base formula used for physicochemical or biological tests intended to support the compendial compliance of a barrier-coated closure should be similar to the corresponding coated closure in configuration and size.

For all *Elastomeric Closures for Injection* ⟨381⟩ tests performed on any closure type, it is important to document the closure being tested, including a full description of the elastomer, and any lubrication, coating, laminations, or treatments applied.

This chapter states test limits for Type I and Type II elastomeric closures. Type I closures are typically used for aqueous preparations. Type II closures are typically intended for nonaqueous preparations and are those which, having properties optimized for special uses, may not meet all requirements listed for Type I closures because of physical configuration, material of construction, or both. If a closure fails to meet one or more of the Type I test requirements, but still meets the Type II requirements for the test(s), the closure is assigned a final classification of Type II. All elastomeric closures suitable for use with injectable preparations must comply with either Type I or Type II test limits. However, this specification is not intended to serve as the sole evaluation criteria for the selection of such closures.

It is appropriate to use this chapter when identifying elastomeric closures that might be acceptable for use with injectable preparations on the basis of their biological reactivity, their aqueous extract physicochemical properties, and their functionality.

The following closure evaluation requirements are beyond the scope of this chapter:

— The establishment of closure identification tests and specifications
— The verification of closure–product physicochemical compatibility
— The identification and safety determination of closure leachables found in the packaged product
— The verification of packaged product closure functionality under actual storage and use conditions

The manufacturer of the injectable product (the end user) must obtain from the closure supplier an assurance that the composition of the closure does not vary and that it is the same as that of the closure used during compatibility testing. When the supplier informs the end user of changes in the composition, compatibility testing must be repeated, totally or partly, depending on the nature of the changes. Closures must be properly stored, cleaned for removal of environmental contaminants and endotoxins, and, for aseptic processes, sterilized prior to use in packaging injectable products.

CHARACTERISTICS

Elastomeric closures are translucent or opaque and have no characteristic color, the latter depending on the additives used. They are homogeneous and practically free from flash and adventitious materials (e.g., fibers, foreign particles, and waste rubber.)

IDENTIFICATION

Closures are made of a wide variety of elastomeric materials and optional polymeric coatings. For this reason, it is beyond the scope of this chapter to specify identification tests that encompass all possible closure presentations. However, it is the responsibility of the closure supplier and the injectable product manufacturer (the end user) to verify the closure elastomeric formulation and any coating or laminate materials used according to suitable identification tests. Examples of some of the analytical test methodologies that may be used include specific gravity, percentage of ash analysis, sulfur content determination, FTIR-ATR test, thin-layer chromatography of an extract, UV absorption spectrophotometry of an extract, or IR absorption spectrophotometry of a pyrolysate.

TEST PROCEDURES

Elastomeric closures shall conform to biological, physicochemical, and functionality requirements both as they are shipped by the closure supplier to the injectable product manufacturer (the end user), and in their final ready-to-use state by the end user.

Copyright (c) 2013 The United States Pharmacopeial Convention. All rights reserved.

For those elastomeric closures processed by the supplier prior to distribution to the end user, the supplier shall demonstrate compendial conformance of closures exposed to such processing and/or sterilization steps. Similarly, if elastomeric closures received by the end user are subsequently processed or sterilized, the end user is responsible for demonstrating the continued conformance of closures to compendial requirements subsequent to such processing and/or sterilization conditions (i.e., in their ready-to-use state). This is especially important if closures shall be exposed to processes or conditions that may significantly impact the biological, physicochemical, or functionality characteristics of the closure (e.g., gamma irradiation).

For closures that are normally lubricated with silicone prior to use, it is permissible to perform physicochemical testing on nonlubricated closures, in order to avoid potential method interference and/or difficulties in interpreting test results. For closures supplied with other lubricious nonbarrier coatings, all tests are to be performed using the coated closure.

For closures coated or laminated with coatings intended to provide a barrier function (e.g., PTFE or lacquer coatings), physicochemical compendial tests apply to the uncoated base elastomer, as well as to the coated closure. In this case, suppliers are responsible for demonstrating physicochemical compendial compliance of the coated closure, as well as of the uncoated closure, processed or treated in a manner simulating conditions typically followed by the supplier for such coated closures prior to shipment to the end user. The uncoated closure subject to physicochemical tests should be similar to the corresponding coated closure in size and configuration. End users of coated closures are also responsible for demonstrating the continued physicochemical compendial conformance of the coated closure, processed or treated in a manner simulating conditions typically employed by the end user prior to use.

In all cases, it is appropriate to document all conditions of closure processing, pretreatment, sterilization, or lubrication when reporting test results.

Table 1 summarizes the testing requirements of closures, and the responsibilities of the supplier and the end user.

BIOLOGICAL TESTS

Two stages of testing are indicated. The first stage is the performance of an in vitro test procedure as described in general test chapter *Biological Reactivity Tests, In Vitro* ⟨87⟩. Materials that do not meet the requirements of the in vitro test are subjected to the second stage of testing, which is the performance of the in vivo tests, *Systemic Injection Test and Intracutaneous Test*, according to the procedures set forth in the general test chapter *Biological Reactivity Tests, In Vivo* ⟨88⟩. Materials that meet the requirements of the in vitro test are not required to undergo in vivo testing.

Type I and Type II closures must both conform to the requirements of either the in vitro or the in vivo biological reactivity tests. [NOTE—Also see the general information chapter *The Biocompatibility of Material Used in Drug Containers, Medical Devices, and Implants* ⟨1031⟩.]

PHYSICOCHEMICAL TESTS

Preparation of Solution S

Place whole, uncut closures corresponding to a surface area of 100 ± 10 cm^2 into a suitable glass container. Cover the closures with 200 mL of Purified Water or Water for Injection. If it is not possible to achieve the prescribed closure surface area (100 ± 10 cm^2) using uncut closures, select the number of closures that will most closely approximate 100 cm^2, and adjust the volume of water

Table 1

Closure Types (As Supplied or Used)	Test Requirements		
	Physicochemical Tests	**Functionality Tests**	**Biological Tests**
Closure with or without Silicone Coating	• Tests are to be performed. • Silicone use is optional. • Responsibility: supplier and end user	• Tests are to be performed. • Silicone use is optional. • Responsibility: supplier and end user	• Tests are to be performed. • Silicone use is optional. • Responsibility: supplier and end user
Closures with Lubricious Coating (Nonbarrier Material; Not Silicone)	• Tests are to be performed on coated closures. • Responsibility: supplier and end user	• Tests are to be performed on coated closures. • Responsibility: supplier and end user	• Tests are to be performed on coated closures. • Responsibility: supplier and end user
Closures with Barrier Coating	• Tests are to be performed on coated closures. • Responsibility: supplier and end user AND: • Tests are to be performed on uncoated closures (base formula). • Responsibility: supplier	• Tests are to be performed on coated closures. • Responsibility: supplier and end user	• Tests are to be performed on coated closures. OR: • Tests are to be performed on uncoated closures (base formula) and the laminate/coating material (report results separately). • Responsibility: supplier and end user

Accessed from 167.78.4.19 by James Cumbie (ocean22) on Mon Sep 09 15:04:23 EDT 2013

used to the equivalent of 2 mL per each 1 cm^2 of actual closure surface area used. Boil for 5 minutes, and rinse five times with cold Purified Water or Water for Injection.

Place the washed closures into a Type I glass wide-necked flask (see *Containers—Glass* ⟨660⟩), add the same quantity of Purified Water or Water for Injection initially added to the closures, and weigh. Cover the mouth of the flask with a Type I glass beaker. Heat in an autoclave so that a temperature of 121 ± 2° is reached within 20 to 30 minutes, and maintain this temperature for 30 minutes. Cool to room temperature over a period of about 30 minutes. Add Purified Water or Water for Injection to bring it up to the original mass. Shake, and immediately decant and collect the solution. [NOTE—This solution must be shaken before being used in each of the tests.]

Preparation of Blank

Prepare a blank solution similarly, using 200 mL of Purified Water or Water for Injection omitting the closures.

Appearance of Solution (Turbidity/Opalescence and Color)

Determination of Turbidity (Opalescence)

NOTE—The determination of turbidity may be performed by visual comparison (*Procedure A*), or instrumentally using a suitable ratio turbidimeter (*Procedure B*). For a discussion of turbidimetry, see *Spectrophotometry and Light-Scattering* ⟨851⟩. Instrumental assessment of clarity provides a more discriminatory test that does not depend on the visual acuity of the analyst.

Hydrazine Sulfate Solution—Dissolve 1.0 g of hydrazine sulfate in water and dilute with water to 100.0 mL. Allow to stand for 4 to 6 hours.

Hexamethylenetetramine Solution—Dissolve 2.5 g of hexamethylenetetramine in 25.0 mL of water in a 100-mL glass-stoppered flask.

Opalescence Stock Suspension—Add 25.0 mL of *Hydrazine Sulfate Solution* to the *Hexamethylenetetramine Solution* in the flask. Mix, and allow to stand for 24 hours. This suspension is stable for 2 months, provided it is stored in a glass container free from surface defects. The suspension must not adhere to the glass and must be well mixed before use.

Opalescence Standard Suspension—Prepare a suspension by diluting 15.0 mL of the *Opalescence Stock Suspension* with water to 1000.0 mL. *Opalescence Standard Suspension* is stable for about 24 hours after preparation.

Reference Suspensions—Prepare according to *Table 2*. Mix and shake before use. [NOTE—Stabilized formazin suspensions that can be used to prepare stable, diluted turbidity standards are available commercially and may be used after comparison with the standards prepared as described.]

Table 2

	Reference Suspension A	Reference Suspension B	Reference Suspension C	Reference Suspension D
Standard of Opalescence	5.0 mL	10.0 mL	30.0 mL	50.0 mL
Water	95.0 mL	90.0 mL	70.0 mL	50.0 mL
Nephelometric Turbidity Units	3 NTU	6 NTU	18 NTU	30 NTU

Procedure A: Visual Comparison—Use identical test tubes made of colorless, transparent, neutral glass with a flat base and an internal diameter of 15 to 25 mm. Fill one tube to a depth of 40 mm with *Solution S,* one tube to the same depth with water, and four others to the same depth with *Reference Suspensions A, B, C,* and *D*. Compare the solutions in diffuse daylight 5 minutes after preparation of the *Reference Suspensions,* viewing vertically against a black background. The light conditions shall be such that *Reference Suspension A* can be readily distinguished from water and that *Reference Suspension B* can be readily distinguished from *Reference Suspension A*.

REQUIREMENT—*Solution S* is not more opalescent than *Reference Suspension B* for Type I closures, and not more opalescent than *Reference Suspension C* for Type II closures. *Solution S* is considered clear if its clarity is the same as that of water when examined as described above, or if its opalescence is not more pronounced than that of *Reference Suspension A* (refer to *Table 3*).

Procedure B: Instrumental Comparison—Measure the turbidity of the *Reference Suspensions* in a suitable calibrated turbidimeter (see *Spectrophotometry and Light Scattering* ⟨851⟩). The blank should be run and the results corrected for the blank. *Reference Suspensions A, B, C,* and *D* represent 3, 6, 18, and 30 Nephelometric Turbidity Units (NTU), respectively. Measure the turbidity of *Solution S* using the calibrated turbidimeter.

REQUIREMENT—The turbidity of *Solution S* is not greater than that for *Reference Suspension B* (6 NTU FTU) for Type I closures, and is not greater than that for *Reference Suspension C* (18 NTU FTU) for Type II closures (refer to *Table 3*).

Table 3

Comparison Method		
Opalescence Requirements	**Procedure A (Visual)**	**Procedure B (Instrumental)**
Type I closures	No more opalescent that Suspension B	No more than 6 NTU
Type II closures	No more opalescent than Suspension C	No more than 18 NTU

Copyright (c) 2013 The United States Pharmacopeial Convention. All rights reserved.

Determination of Color

Color Standard—Prepare a solution by diluting 3.0 mL of *Matching Fluid O* (see *Color and Achromicity* ⟨631⟩) with 97.0 mL of diluted hydrochloric acid.

Procedure—Use identical tubes made of colorless, transparent, neutral glass with a flat base and an internal diameter of 15 to 25 mm. Fill one tube to a depth of 40 mm with *Solution S,* and the second with the *Color Standard*. Compare the liquids in diffuse daylight, viewing vertically against a white background.

Requirement—*Solution S* is not more intensely colored than the *Color Standard*.

Acidity or Alkalinity

Bromothymol Blue Solution—Dissolve 50 mg of bromothymol blue in a mixture of 4 mL of 0.02 M sodium hydroxide and 20 mL of alcohol. Dilute with water to 100 mL.

Procedure—To 20 mL of *Solution S* add 0.1 mL of *Bromothymol Blue Solution*. If the solution is yellow, titrate with 0.01 N sodium hydroxide until a blue endpoint is reached. If the solution is blue, titrate with 0.01 N hydrochloric acid until a yellow endpoint is reached. If the solution is green, it is neutral and no titration is required.

Blank Correction—Test 20 mL of *Blank* similarly. Correct the results obtained for *Solution S* by subtracting or adding the volume of titrant required for the *Blank,* as appropriate. (*Reference Titrimetry* ⟨541⟩.)

Requirement—Not more than 0.3 mL of 0.01 N sodium hydroxide produces a blue color, or not more than 0.8 mL of 0.01 N hydrochloric acid produces a yellow color, or no titration is required.

Absorbance

Procedure—[NOTE—Perform this test within 5 hours of preparing *Solution S*.] Pass *Solution S* through a 0.45-µm pore size filter, discarding the first few mL of filtrate. Measure the absorbance of the filtrate at wavelengths between 220 and 360 nm in a 1-cm cell using the blank in a matched cell in the reference beam. If dilution of the filtrate is required before measurement of the absorbance, correct the test results for the dilution.

Requirement—The absorbances at these wavelengths do not exceed 0.2 for Type I closures or 4.0 for Type II closures.

Reducing Substances

Procedure— [NOTE—Perform this test within 4 hours of preparing *Solution S*.]

To 20.0 mL of *Solution S* add 1 mL of diluted sulfuric acid and 20.0 mL of 0.002 M potassium permanganate. Boil for 3 minutes. Cool, add 1 g of potassium iodide, and titrate immediately with 0.01 M sodium thiosulfate, using 0.25 mL of starch solution TS as the indicator. Perform a titration using 20.0 mL of blank and note the difference in volume of 0.01 M sodium thiosulfate required.

Requirement—The difference between the titration volumes is not greater than 3.0 mL for Type I closures and not greater than 7.0 mL for Type II closures.

Heavy Metals

Procedure—Proceed as directed for *Method I* under *Heavy Metals* ⟨231⟩. Prepare the *Test Preparation* using 10.0 mL of *Solution S*.

Requirement—*Solution S* contains not more than 2 ppm of heavy metals as lead.

Extractable Zinc

Test Solution—Prepare a *Test Solution* by diluting 10.0 mL of *Solution S* to 100 mL with 0.1 N hydrochloric acid. Prepare a test blank similarly, using the *Blank* for *Solution S*.

Zinc Standard Solution—Prepare a solution (10 ppm Zn) by dissolving zinc sulfate in 0.1 N hydrochloric acid.

Reference Solutions—Prepare not fewer than three *Reference Solutions* by diluting the *Zinc Standard Solution* with 0.1 N hydrochloric acid. The concentrations of zinc in these *Reference Solutions* are to span the expected limit of the *Test Solution*.

Procedure—Use a suitable atomic absorption spectrophotometer (see *Spectrophotometry and Light Scattering* ⟨851⟩) equipped with a zinc hollow-cathode lamp and an air–acetylene flame. An alternative procedure such as an appropriately validated inductively coupled plasma analysis (ICP) may be used.

Test each of the *Reference Solutions* at the zinc emission line of 213.9 nm at least three times. Record the steady readings. Rinse the apparatus with the test blank solution each time, to ensure that the reading returns to initial blank value. Prepare a calibration curve from the mean of the readings obtained for each *Reference Solution*. Record the absorbance of the *Test Solution*. Determine the ppm zinc concentration of the *Test Solution* using the calibration curve.

Requirement—*Solution S* contains not more than 5 ppm of extractable zinc.

Accessed from 167.78.4.19 by James Cumbie (ocean22) on Mon Sep 09 15:04:23 EDT 2013

Ammonium

Alkaline Potassium Tetraiodomercurate Solution—Prepare a 100 mL solution containing 11 g of potassium iodide and 15 g of mercuric iodide in water. Immediately before use, mix 1 volume of this solution with an equal volume of a 250 g per L solution of sodium hydroxide.

Test Solution—Dilute 5 mL of *Solution S* to 14 mL with water. Make alkaline if necessary by adding 1 N sodium hydroxide, and dilute with water to 15 mL. Add 0.3 mL of *Alkaline Potassium Tetraiodomercurate Solution,* and close the container.

Ammonium Standard Solution—Prepare a solution of ammonium chloride in water (1 ppm NH_4). Mix 10 mL of the 1 ppm ammonium chloride solution with 5 mL water and 0.3 mL of *Alkaline Potassium Tetraiodomercurate Solution.* Close the container.

Requirement—After 5 minutes, any yellow color in the *Test Solution* is no darker than the *Ammonium Standard Solution* (no more than 2 ppm of NH_4 in *Solution S*).

Volatile Sulfides

Procedure—Place closures, cut if necessary, with a total surface area of 20 ± 2 cm^2 in a 100-mL flask, and add 50 mL of a 20 g per L citric acid solution. In the same manner and at the same time, prepare a control solution in a separate 100-mL flask by dissolving 0.154 mg of sodium sulfide in 50 mL of a 20 g per L citric acid solution. Place a piece of lead acetate paper over the mouth of each flask, and hold the paper in position by placing over it an inverted weighing bottle. Heat the flasks in an autoclave at $121 \pm 2°$ for 30 minutes.

Requirement—Any black stain on the paper produced by the test solution is not more intense than that produced by the control substance.

FUNCTIONALITY TESTS

NOTE—Samples treated as described for preparation of *Solution S* and air dried should be used for *Functionality Tests* of *Penetrability, Fragmentation,* and *Self-Sealing Capacity. Functionality Tests* are performed on closures intended to be pierced by a hypodermic needle. The *Self-Sealing Capacity* test is required only for closures intended for multiple-dose containers. The needle specified for each test is a lubricated long bevel (bevel angle $12 \pm 2°$) hypodermic needle[1].

Penetrability

Procedure—Fill 10 suitable vials to the nominal volume with water, fit the closures to be examined, and secure with a cap. Using a new hypodermic needle as described above for each closure, pierce the closure with the needle perpendicular to the surface.

Requirement—The force for piercing is no greater than 10 N (1 kgf) for each closure, determined with an accuracy of ±0.25 N (25 gf).

Fragmentation

Closures for Liquid Preparations—Fill 12 clean vials with water to 4 mL less than the nominal capacity. Fit the closures to be examined, secure with a cap, and allow to stand for 16 hours.

Closures for Dry Preparations—Fit closures to be examined into 12 clean vials, and secure each with a cap.

Procedure—Using a hypodermic needle as described above fitted to a clean syringe, inject into each vial 1 mL of water while removing 1 mL of air. Repeat this procedure four times for each closure, piercing each time at a different site. Use a new needle for each closure, checking that it is not blunted during the test. Filter the total volume of liquid in all the vials through a single filter with a nominal pore size no greater than 0.5 µm. Count the rubber fragments on the surface of the filter visible to the naked eye.

Requirement—There are no more than five fragments visible. This limit is based on the assumption that fragments with a diameter >50 µm are visible to the naked eye. In case of doubt or dispute, the particles are examined microscopically to verify their nature and size.

Self-Sealing Capacity

Procedure—Fill 10 suitable vials with water to the nominal volume. Fit the closures that are to be examined, and cap. Using a new hypodermic needle as described above for each closure, pierce each closure 10 times, piercing each time at a different site. Immerse the 10 vials in a solution of 0.1% (1 g per L) methylene blue, and reduce the external pressure by 27 kPa for 10 minutes. Restore to atmospheric pressure, and leave the vials immersed for 30 minutes. Rinse the outside of the vials.

Requirement—None of the vials contain any trace of blue solution.

[1]Refer to ISO 7864, Sterile hypodermic needles for single use with an external diameter of 0.8 mm (21 Gauge).

Copyright (c) 2013 The United States Pharmacopeial Convention. All rights reserved.

⟨601⟩ AEROSOLS, NASAL SPRAYS, METERED-DOSE INHALERS, AND DRY POWDER INHALERS

This general chapter contains test methods for propellants, pressurized topical aerosols, nasal sprays, metered-dose inhalers, and propellant-free dry powder inhalers used to aerosolize, or to aerosolize and meter, doses of powders for inhalation. Apply these methods, where indicated, in the testing of the appropriate dosage forms.

PROPELLANTS

Caution—Hydrocarbon propellants are highly flammable and explosive. Observe precautions and perform sampling and analytical operations in a well-ventilated fume hood.

General Sampling Procedure

This procedure is used to obtain test specimens for those propellants that occur as gases at about 25° and that are stored in pressurized cylinders. Use a stainless steel sample cylinder equipped with a stainless steel valve and having a capacity of not less than 200 mL and a pressure rating of 240 psi or more. Dry the cylinder with the valve open at 110° for 2 hours, and evacuate the hot cylinder to less than 1 mm of mercury. Close the valve, cool, and weigh. Connect one end of a charging line tightly to the propellant container and the other end loosely to the sample cylinder. Carefully open the propellant container, and allow the propellant to flush out the charging line through the loose connection. Avoid excessive flushing, which causes moisture to freeze in the charging line and connections. Tighten the fitting on the sample cylinder, and open the sample cylinder valve, allowing the propellant to flow into the evacuated cylinder. Continue sampling until the desired amount of specimen is obtained, then close the propellant container valve, and finally close the sample cylinder valve. [*Caution—Do not overload the sample cylinder; hydraulic expansion due to temperature change can cause overloaded cylinders to explode.*] Again weigh the charged sample cylinder, and calculate the weight of the specimen.

Approximate Boiling Temperature

Transfer a 100-mL specimen to a tared, pear-shaped, 100-mL centrifuge tube containing a few boiling stones, and weigh. Suspend a thermometer in the liquid, and place the tube in a medium maintained at a temperature of 32° above the expected boiling temperature. When the thermometer reading becomes constant, record as the boiling temperature the thermometer reading after at least 5% of the specimen has distilled. Retain the remainder of the specimen for the determination of *High-Boiling Residues*.

High-Boiling Residues, Method I

Allow 85 mL of the specimen to distill as directed in the test for *Approximate Boiling Temperature*, and transfer the centrifuge tube containing the remaining 15 mL of specimen to a medium maintained at a temperature 10° above the boiling temperature. After 30 minutes, remove the tube from the water bath, blot dry, and weigh. Calculate the weight of the residue.

High-Boiling Residues, Method II

Prepare a cooling coil from copper tubing (about 6 mm outside diameter × about 6.1 m long) to fit into a vacuum-jacketed flask. Immerse the cooling coil in a mixture of dry ice and acetone in a vacuum-jacketed flask, and connect one end of the tubing to the propellant sample cylinder. Carefully open the sample cylinder valve, flush the cooling coil with about 50 mL of the propellant, and discard this portion of liquefied propellant. Continue delivering liquefied propellant from the cooling coil, and collect it in a previously chilled 1000-mL sedimentation cone until the cone is filled to the 1000-mL mark. Allow the propellant to evaporate, using a warm water bath maintained at about 40° to reduce evaporating time. When all of the liquid has evaporated, rinse the sedimentation cone with two 50-mL portions of pentane, and combine the rinsings in a tared 150-mL evaporating dish. Transfer 100 mL of the pentane solvent to a second tared 150-mL evaporating dish, place both evaporating dishes on a water bath, evaporate to dryness, and heat the dishes in an oven at 100° for 60 minutes. Cool the dishes in a desiccator, and weigh. Repeat the heating for 15-minute periods until successive weighings are within 0.1 mg, and calculate the weight of the residue obtained from the propellant as the difference between the weights of the residues in the two evaporating dishes.

Water Content

Proceed as directed under *Water Determination* ⟨921⟩, with the following modifications: (a) Provide the closed-system titrating vessel with an opening through which passes a coarse-porosity gas dispersion tube connected to a sampling cylinder. (b) Dilute the *Reagent* with anhydrous methanol to give a water equivalence factor of between 0.2 and 1.0 mg per mL; age this diluted solution for not less than 16 hours before standardization. (c) Obtain a 100-g specimen as directed under *General Sampling Procedure*, and introduce the specimen into the titration vessel through the gas dispersion tube at a rate of about 100 mL of gas per minute; if necessary, heat the sample cylinder gently to maintain this flow rate.

Accessed from 167.78.4.19 by James Cumbie (ocean22) on Mon Sep 09 15:04:23 EDT 2013

Other Determinations

For those aerosols that use propellants, perform the tests specified in the individual *NF* propellant monographs.

AEROSOLS

Because leaching of extractable substances into pressurized formulations should be minimized, valve materials and other components that are in contact with the product meet the requirements under *Elastomeric Closures for Injections* ⟨381⟩ (Note that under *Physicochemical Test Procedures* in ⟨381⟩ the directions for preparing a sample require pre-extraction, which may cause an underestimate of the amount of extractables from a given component.) See also *Aerosols* under *Pharmaceutical Dosage Forms* ⟨1151⟩.

TOPICAL AEROSOLS

The following tests are applicable to topical aerosols containing drug, in suspension or solution, packaged under pressure, and released upon activation of an appropriate valve system.

Delivery Rate and Delivered Amount

Perform these tests only on containers fitted with continuous valves.

Delivery Rate—Select not fewer than four aerosol containers, shake, if the label includes this directive, remove the caps and covers, and actuate each valve for 2 to 3 seconds. Weigh each container accurately, and immerse in a constant-temperature bath until the internal pressure is equilibrated at a temperature of 25° as determined by constancy of internal pressure, as directed under the *Pressure Test* below. Remove the containers from the bath, remove excess moisture by blotting with a paper towel, shake, if the label includes this directive, actuate each valve for 5.0 seconds (accurately timed by use of a stopwatch), and weigh each container again. Return the containers to the constant-temperature bath, and repeat the foregoing procedure three times for each container. Calculate the average *Delivery Rate,* in g per second, for each container.

Delivered Amount—Return the containers to the constant-temperature bath, continuing to deliver 5 second actuations to waste, until each container is exhausted. [NOTE—Ensure that sufficient time is allowed between each actuation to avoid significant canister cooling.] Calculate the total weight loss from each container. This is the *Delivered Amount.*

Pressure Test

Perform this test only on topical aerosols fitted with continuous valves.

Select not fewer than four aerosol containers, remove the caps and covers, and immerse in a constant-temperature bath until the internal pressure is constant at a temperature of 25°. Remove the containers from the bath, shake, and remove the actuator and water, if any, from the valve stem. Place each container in an upright position, and determine the pressure in each container by placing a calibrated pressure gauge on the valve stem, holding firmly, and actuating the valve so that it is fully open. The gauge is of a calibration approximating the expected pressure and is fitted with an adapter appropriate for the particular valve stem dimensions. Read the pressure directly from the gauge.

Minimum Fill

Topical aerosols meet the requirements for aerosols under *Minimum Fill* ⟨755⟩.

Leakage Test

Perform this test only on topical aerosols fitted with continuous valves.

Select 12 aerosol containers, and record the date and time to the nearest half hour. Weigh each container to the nearest mg, and record the weight, in mg, of each as W_1. Allow the containers to stand in an upright position at a temperature of 25.0 ± 2.0° for not less than 3 days, and again weigh each container, recording the weight, in mg, of each as W_2, and recording the date and time to the nearest half hour. Determine the time, T, in hours, during which the containers were under test. Calculate the leakage rate, in mg per year, of each container taken by the formula:

$$(365)(24/T)(W_1 - W_2).$$

Where plastic-coated glass aerosol containers are tested, dry the containers in a desiccator for 12 to 18 hours, and allow them to stand in a constant-humidity environment for 24 hours prior to determining the initial weight as indicated above. Conduct the test under the same constant-humidity conditions. Empty the contents of each container tested by employing any safe technique (e.g., chill to reduce the internal pressure, remove the valve, and pour). Remove any residual contents by rinsing with suitable solvents, then rinse with a few portions of methanol. Retain as a unit the container, the valve, and all associated parts, and heat them at 100° for 5 minutes. Cool, weigh, record the weight as W_3, and determine the net fill weight ($W_1 - W_3$) for each container tested. [NOTE—If the average net fill weight has been determined previously, that value may be used in place of the value ($W_1 - W_3$) above.] The

Copyright (c) 2013 The United States Pharmacopeial Convention. All rights reserved.

requirements are met if the average leakage rate per year for the 12 containers is not more than 3.5% of the net fill weight, and none of the containers leaks more than 5.0% of the net fill weight per year. If 1 container leaks more than 5.0% per year, and if none of the containers leaks more than 7.0% per year, determine the leakage rate of an additional 24 containers as directed herein. Not more than 2 of the 36 containers leak more than 5.0% of the net fill weight per year, and none of the 36 containers leaks more than 7.0% of the net fill weight per year. Where the net fill weight is less than 15 g and the label bears an expiration date, the requirements are met if the average leakage rate of the 12 containers is not more than 525 mg per year and none of the containers leaks more than 750 mg per year. If 1 container leaks more than 750 mg per year, but not more than 1.1 g per year, determine the leakage rate of an additional 24 containers as directed herein. Not more than 2 of the 36 containers leak more than 750 mg per year, and none of the 36 containers leaks more than 1.1 g per year. This test is in addition to the customary in-line leak testing of each container.

Number of Discharges per Container

Perform this test only on topical aerosols fitted with dose-metering valves, at the same time as, and on the same containers used for, the test for *Delivered-Dose Uniformity*. Determine the number of discharges or deliveries by counting the number of priming discharges plus those used in determining the spray contents, and continue to fire until the label claim number of discharges. The requirements are met if all the containers or inhalers tested contain not less than the number of discharges stated on the label.

Delivered-Dose Uniformity

The test for *Delivered-Dose Uniformity* is required for topical aerosols fitted with dose-metering valves. For collection of the minimum dose, proceed as directed in the test for *Delivered-Dose Uniformity* under *Metered-Dose Inhalers and Dry Powder Inhalers,* as described below, except to modify the dose sampling apparatus so that it is capable of quantitatively capturing the delivered dose from the preparation being tested. Unless otherwise stated in the individual monograph, apply the acceptance criteria for *Metered-Dose Inhalers and Dry Powder Inhalers* as described below.

NASAL SPRAYS

The following test is applicable to nasal sprays, formulated as aqueous suspensions or solutions of drug, presented in multi-dose containers and fitted with dose-metering valves. In all cases, and for all tests, prepare and test the nasal spray as directed on the label and the instructions for use.

Delivered-Dose Uniformity

Unless otherwise directed in the individual monograph, the drug content of the minimum delivered doses (minimum number of sprays per nostril as described on the label, or instructions for use) collected at the beginning of unit life (after priming as described on the label, or instructions for use) and at the label claim number of metered sprays, from each of 10 separate containers, must meet the following acceptance criteria: not more than 2 of the 20 doses are outside the range of 80% to 120% of label claim, and none are outside the range of 75% to 125% of label claim, while the mean for each of the beginning and end doses falls within the range of 85% to 115% of label claim. If 3–6 doses of the 20 doses collected are outside of 80% to 120% of the label claim, but none are outside of 75% to 125% of label claim, and the means for each of the beginning and end doses fall within 85% to 115% of label claim, select 20 additional containers for second-tier testing. For second-tier testing, the requirements are met if not more than 6 of the 60 doses collected are outside the range of 80% to 120% of label claim, none are outside the range of 75% to 125% of label claim, and the means for each of the beginning and end doses fall within the range of 85% to 115% of label claim.

SAMPLING FOR DELIVERED-DOSE UNIFORMITY OF METERED-DOSE NASAL SPRAYS

General Sampling Procedure—To ensure reproducible in-vitro dose collection, it is recommended that a mechanical means of actuating the pump assembly be employed to deliver doses for collection. The mechanical actuation procedure should have adequate controls for the critical mechanical actuation parameters (e.g., actuation force, actuation speed, stroke length, rest periods, etc.). The test must be performed on units that have been primed according to the patient-use instructions. The test unit should be actuated in a vertical or near vertical, valve-up, position. The two doses collected at the beginning and end of the container life should be the dose immediately following priming and the dose corresponding to the last label claim number of doses from the container.

For suspension products, the delivered dose should be delivered into a suitable container (e.g., scintillation vial) in which quantitative transfer from the container under test can be accomplished. A validated analytical method is employed to determine the amount of drug in each delivered dose, and data are reported as a percent of label claim. For solution products, the delivered dose can be determined gravimetrically from the weight of the delivered dose, and the concentration and density of the fill solution of the product under test.

METERED-DOSE INHALERS AND DRY POWDER INHALERS

The following tests are applicable to metered-dose inhalers that are formulated as suspensions or solutions of active drug in propellants and dry powder inhalers presented as single or multidose units. The following test methods are specific to the aforemen-

Accessed from 167.78.4.19 by James Cumbie (ocean22) on Mon Sep 09 15:04:23 EDT 2013

tioned inhalers and may require modification when testing alternative inhalation technologies (for example, breath-actuated metered-dose inhalers, or dose-metering nebulizers). However, Pharmacopeial requirements for all dose-metering inhalation dosage forms require determination of the delivered dose and *Aerodynamic Size Distribution*. In all cases, and for all tests, prepare and test the inhaler as directed on the label and the instructions for use. When these directions are not provided by the product manufacturer, follow the precise dose discharge directions included in the tests below.

Delivered-Dose Uniformity

The test for *Delivered-Dose Uniformity* is required for inhalers (e.g., metered-dose inhalers or dry powder inhalers) containing drug formulation (e.g., solution, suspension, or powder) either in reservoirs or in premetered dosage units, and for drug formulations packaged in reservoirs or in premetered dosage units where these containers are labeled for use with a named inhalation device. (For inhalations packaged in premetered dosage units, see also *Uniformity of Dosage Units* ⟨905⟩.) Note that the target-delivered dose is the expected mean drug content for a large number of delivered doses collected from many inhalers of the chosen product. In many cases, its value may depend upon the manner in which the test for delivered dose is performed. For metered-dose inhalers, the target-delivered dose is specified by the label claim, unless otherwise specified in the individual monograph. For dry powder inhalers, where the label claim is usually the packaged or metered-dose of drug, the target-delivered dose is specified in the individual monograph and is usually less than the label claim. Its value reflects the expected mean drug content for a large number of delivered doses collected from the product, using the method specified in the monograph.

Unless otherwise directed in the individual monograph, the drug content of the minimum delivered dose from each of 10 separate containers is determined in accordance with the procedure described below.

Unless otherwise specified in the individual monograph, the requirements for dosage uniformity are met if not less than 9 of the 10 doses are between 75% and 125% of the specified target-delivered dose and none is outside the range of 65% to 135% of the specified target-delivered dose. If the contents of not more than 3 doses are outside the range of 75% to 125% of the specified target-delivered dose, but within the range of 65% to 135% of the specified target-delivered dose, select 20 additional containers, and follow the prescribed procedure for analyzing 1 minimum dose from each. The requirements are met if not more than 3 results, out of the 30 values, lie outside the range of 75% to 125% of the specified target-delivered dose, and none is outside the range of 65% to 135% of the specified target-delivered dose.

SAMPLING THE DELIVERED DOSE FROM METERED-DOSE INHALERS

To determine the content of active ingredient in the discharged spray from a metered-dose inhaler, use the sampling apparatus described below, using a flow rate of 28.3 L of air per minute (±5%), unless otherwise stated in the individual monograph.

Copyright (c) 2013 The United States Pharmacopeial Convention. All rights reserved.

Apparatus A—The apparatus (see *Figure 1*)

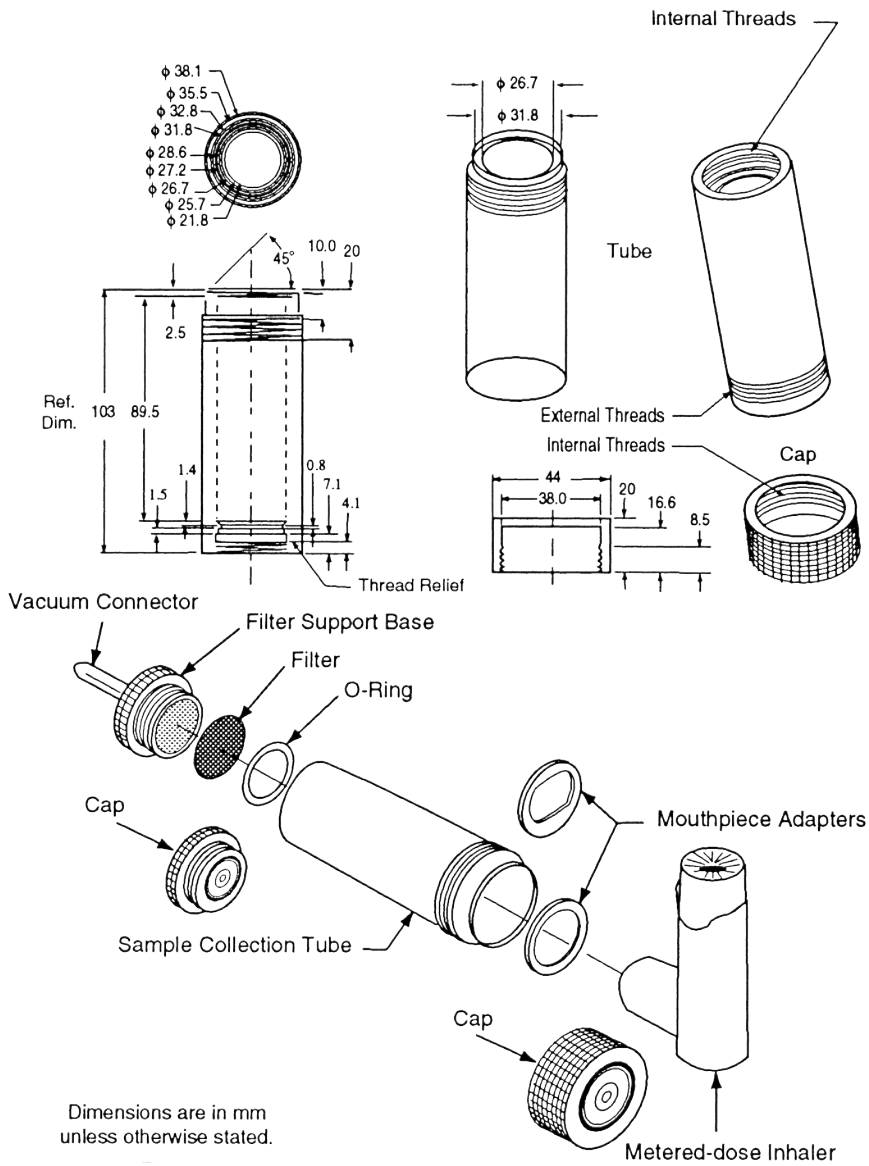

Fig. 1. Sampling apparatus for pressurized metered-dose inhalers.

consists of a filter support base with an open-mesh filter support, such as a stainless steel screen, a collection tube that is clamped or screwed to the filter support base, and a mouthpiece adapter to ensure an airtight seal between the collection tube and the mouthpiece. Use a mouthpiece adapter that ensures that the opening of the inhaler mouthpiece is flush with the front face or 2.5-mm indented shoulder in the sample collection tube, as appropriate. The vacuum connector is connected to a system comprising a vacuum source, flow regulator, and flowmeter. The source should be capable of pulling air through the complete assembly, including the filter and the inhaler to be tested, at the desired flow rate. When testing metered-dose inhalers, air should be drawn continuously through the system to avoid loss of drug into the atmosphere. The filter support base is designed to accommodate 25-mm diameter filter disks. At the airflow being used, the sample collection tube and the filter disk must be capable of quantitatively collecting the *Delivered Dose.* The filter disk and other materials used in the construction of the apparatus must be compatible with the drug and the solvents that are used to extract the drug from the filter. One end of the collection tube is designed to hold the filter disk tightly against the filter support base. When assembled, the joints between the components of the apparatus are airtight so that when a vacuum is applied to the base of the filter, all of the air drawn through the collection device passes through the inhaler.

Procedure—Prepare the inhaler for use according to the label instructions. Unless otherwise specified in the individual monograph, with the vacuum pump running, ensuring an airflow rate through the inhaler of 28.3 L of air per minute (±5%), discharge the minimum recommended dose into the apparatus through the mouthpiece adapter by depressing the valve for a duration

Accessed from 167.78.4.19 by James Cumbie (ocean22) on Mon Sep 09 15:04:23 EDT 2013

sufficient to ensure that the dose has been completely discharged. Detach the inhaler from *Apparatus A,* and disconnect the vacuum. Assay the contents of the apparatus for drug after rinsing the filter and the interior of the apparatus with a suitable solvent.

SAMPLING THE DELIVERED DOSE FROM DRY POWDER INHALERS

To determine the content of active ingredient emitted from the mouthpiece of a dry powder inhaler, use *Apparatus B* (see *Figure 2*).

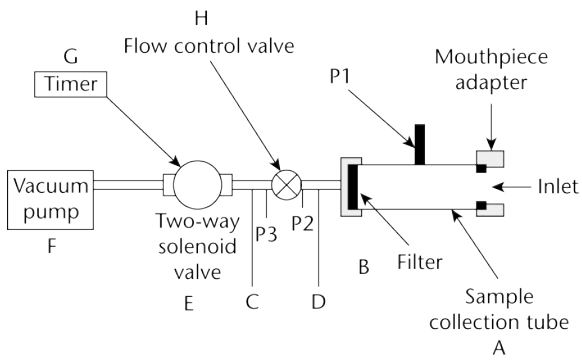

Fig. 2. Apparatus B: Sampling apparatus for dry powder inhalers. (See *Table 1* for component specifications.)

This apparatus is capable of sampling the emitted doses at a variety of airflow rates.

Apparatus B—The apparatus is similar to that described in *Figure 1* for testing metered-dose inhalers. In this case, however, the filter and collection tube have a larger internal diameter to accommodate 47-mm diameter filter disks. This feature enables dosage collection at higher airflow rates—up to 100 L of air per minute—when necessary. A mouthpiece adapter ensures an airtight seal between the collection tube and the mouthpiece of the dry powder inhaler being tested. The mouthpiece adapter must ensure that the tip of the inhaler mouthpiece is flush with the open end of the sample collection tube. Tubing connectors, if they are used, should have an internal diameter greater than or equal to 8 mm to preclude their own internal diameters from creating significant airflow resistance. A vacuum pump with excess capacity must be selected in order to draw air, at the designated volumetric flow rate, through both the sampling apparatus and the inhaler simultaneously. A timer-controlled, low resistance, solenoid-operated, two-way valve is interposed between the vacuum pump and the flow-control valve to control the duration of flow. This type of valve enables 4.0 L of air (±5%) to be withdrawn from the mouthpiece of the inhaler at the designated flow rate. Flow control is achieved by ensuring that critical (sonic) flow occurs in the flow-control valve (absolute pressure ratio $P3/P2 \leq 0.5$ under conditions of steady-state flow).

Procedure—Operate the apparatus at an airflow rate that produces a pressure drop of 4 kPa (40.8 cm H_2O) over the inhaler to be tested and at a duration consistent with the withdrawal of 4 L of air from the mouthpiece of the inhaler. [NOTE—If the flow rate and duration are defined otherwise in the monograph, adjust the system to within 5% of those values.] Determine the test flow rate using *Apparatus B* as follows. Insert an inhaler into the mouthpiece adapter to ensure an airtight seal. In cases where the drug packaging modifies the inhaler's resistance to airflow, use a loaded, drug-free inhaler (with previously emptied packaging). In other cases, use an unloaded (drug free) inhaler. Connect one port of a differential pressure transducer to the pressure tap, P1, and leave the other open to the atmosphere. Switch on the pump, and open the two-way solenoid valve. Adjust the flow-control valve until the pressure drop across the inhaler is 4.0 kPa (40.8 cm H_2O). Ensure that critical (sonic) flow occurs in the flow-control valve by determining the individual values for absolute pressure, P2 and P3, so that their ratio P3/P2 is less than or equal to 0.5. If this criterion cannot be achieved, it is likely that the vacuum pump is worn or of insufficient capacity. Critical (sonic) flow conditions in the flow-control valve are required in order to ensure that the volumetric airflow drawn from the mouthpiece is unaffected by pump fluctuations and changes in airflow resistance of the inhaler. Remove the inhaler from the mouthpiece adapter and without disturbing the flow-control valve, measure the airflow rate drawn from the mouthpiece, Q_{out}, by connecting a flowmeter to the mouthpiece adaptor in an airtight fashion. Use a flowmeter calibrated for the volumetric flow leaving the meter in an airtight fashion to directly determine Q_{out} or, if such a meter is unobtainable, calculate the volumetric flow leaving the meter (Q_{out}) using the ideal gas law. For example, for a meter calibrated for the entering volumetric flow (Q_{in}), use the formula:

$$Q_{out} = Q_{in}P_0 / (P_0 - \Delta P)$$

where P_0 is the atmospheric pressure and ΔP is the pressure drop over the meter. If the flow rate is greater than 100 L of air per minute, adjust the flow-control valve until Q_{out} equals 100 L per minute; otherwise, record the value of Q_{out}, and leave the flow-control valve undisturbed. Define the test flow duration, $T = 240/Q_{out}$, in seconds, so that a volume of 4.0 L of air (±5%) is withdrawn from the inhaler at the test flow rate Q_{out}, and adjust the timer controlling the operation of the two-way solenoid valve accordingly. Prime or load the inhaler with powder for inhalation according to the labeled instructions. With the vacuum pump running and the solenoid valve closed, insert the inhaler mouthpiece horizontally into the mouthpiece adapter. Discharge the powder into the sampling apparatus by activating the timer controlling the solenoid valve and withdrawing 4.0 L of air from the inhaler at the previously defined airflow rate. If the labeled instructions so direct, repeat the operation so as to simulate the use of the inhaler by the patient (e.g., inhale two or three times, if necessary, to empty the capsule). Repeat the whole operation n –1 times beginning with the text, "Prime or load the inhaler with powder," where n is the number of times defined in the labeling as the minimum recommended dose. Detach the dry powder inhaler from the sampling apparatus, and disconnect the vacuum tubing,

Copyright (c) 2013 The United States Pharmacopeial Convention. All rights reserved.

D. Assay the contents of the apparatus for drug after rinsing the filter and the interior of the apparatus with a suitable solvent. Where specified in individual monographs, perform this test under conditions of controlled temperature and humidity.

Delivered-Dose Uniformity over the Entire Contents

The test for *Delivered-Dose Uniformity over the Entire Contents* is required for inhalers (e.g., metered-dose inhalers or dry powder inhalers) containing multiple doses of drug formulation (e.g., solution, suspension, or dry powder) either in reservoirs or in premetered dosage units (e.g., blisters), and for drug formulations packaged in reservoirs or in multiple-dose assemblies of premetered dosage units that have a predetermined dose sequence, where these multiple-dose assemblies are labeled for use with a named inhalation device. The test for *Delivered-Dose Uniformity over the Entire Contents* also ensures that multidose products supply the total number of discharges stated on the label. Unless otherwise directed in the individual monograph, the drug content of at least 9 of the 10 doses collected from one inhaler, in accordance with the procedure below, are between 75% and 125% of the target-delivered dose, and none is outside the range of 65% to 135% of the target-delivered dose. If the contents of not more than 3 doses are outside the range of 75% to 125%, but within the range of 65% to 135% of the target-delivered dose, select 2 additional inhalers, and follow the prescribed procedure for analyzing 10 doses from each. The requirements are met if not more than 3 results, out of the 30 values, lie outside the range of 75% to 125% of the target-delivered dose, and none is outside the range of 65% to 135% of the target-delivered dose.

METERED-DOSE INHALERS

Apparatus—Use *Apparatus A* as directed in *Sampling the Delivered-Dose from Metered-Dose Inhalers* under *Delivered-Dose Uniformity* at a flow rate of 28.3 L of air per minute (±5%).

Table 1. Component Specifications for Apparatus B (see *Fig. 2*)

Code	Item	Description	Dimensions
A	Sample collection tube[a]	See *Fig. 2*	34.85-mm ID × 12-cm length
B	Filter[b]	See *Fig. 2*	47-mm glass fiber filter
C	Connector	(e.g., short metal coupling with low diameter branch to P3)	≥8-mm ID
D	Vacuum tubing	(e.g., silicon tubing with an outside diameter of 14 mm and an internal diameter of 8 mm)	A length of suitable tubing ≥8 mm ID with an internal volume of 25 ± 5 mL.
E	Two-way solenoid valve[c]	See *Fig. 2*	2-way, 2-port solenoid valve having an ID ≥8 mm and an opening response time of ≤100 milliseconds.
F	Vacuum pump[d]	See *Fig. 2*	Pump must be capable of drawing the required flow rate through the assembled apparatus with the dry powder inhaler in the mouthpiece adapter. Connect the pump to the solenoid valve using short and wide (≥10-mm ID) vacuum tubing and connectors to minimize pump capacity requirements.
G	Timer[e]	See *Fig. 2*	The timer switches current directly to the solenoid valve for the required duration.
P1	Pressure tap	See *Fig. 2*	2.2-mm ID, 3.1-mm OD flush with the internal surface of the sample collection tube, centered and burr free, 59 mm from its inlet. The pressure taps P1, P2, and P3 must not be open to the atmosphere during dose collection.
P1, P2, P3	Pressure measurements[f]		
H	Flow-control valve[g]	See *Fig. 2*	Adjustable regulating valve with maximum C_v ≥ 1[h].

[a] An example being a Millipore product number XX40 047 00 (Millipore Corporation, 80, Ashby Road, Bedford, MA 01732), modified so that the exit tube has an ID ≥ 8-mm, fitted with Gelman product number 61631.
[b] A/E (Gelman Sciences Inc., 600 South Wagner Road, Ann Arbor, MI 48106) or equivalent.
[c] ASCO product number 8030G13, Automatic Switch Company, 60 Hanover Road, Florham Park, NJ 07932.
[d] Gast product type 1023, 1423, or 2565 (Gast Manufacturing Inc., PO Box 97, Benton Harbor, MI 49022) or equivalent.
[e] Eaton Product number 45610-400 (Eaton Corporation, Automotive Products Division, 901, South 12th Street, Watertown, WI 53094) or equivalent.
[f] An example being a PDM 210 pressure meter (Air-Neotronics Ltd., Neotronics Technology plc, Parsonage Road, Takeley, Bishop's Stortford, CM22 6PU, UK), or equivalent.
[g] Parker Hannifin type 8FV12LNSS (Parker Hannifin plc., Riverside Road, Barnstable, Devon EX31 1NP, UK) or equivalent.
[h] Flow Coefficient, as defined by ISA S75.02 "Control valve capacity test procedure" in *Standards and Recommended Practices for Instrumentation and Control*, 10th ed., Vol. 2, 1989. Published by Instrument Society of America, 67 Alexander Drive, P.O. Box 1227, Research Triangle Park, NC 27709, U.S.A.

Accessed from 167.78.4.19 by James Cumbie (ocean22) on Mon Sep 09 15:04:23 EDT 2013

Procedure—A single dose is defined as the number of sprays specified in the product labeling as the minimum recommended dose. Select a single metered-dose inhaler, and follow the labeled instructions for priming, shaking, cleaning, and firing the inhaler throughout. Unless otherwise prescribed in the patient instructions, shake the inhaler for 5 seconds, and fire one minimum recommended dose to waste. Wait for 5 seconds, and collect the next dose. Detach the inhaler from *Apparatus A,* and disconnect the vacuum. Assay the contents of the apparatus for drug after rinsing the filter and the interior of the apparatus with a suitable solvent. Collect two more doses, allowing at least 5 seconds between doses. Discharge the device to waste, waiting for not less than 5 seconds between actuations (unless otherwise specified in the individual monograph), until (n/2) + 1 minimum recommended doses remain, in which n is the number of minimum recommended doses on the label. Collect four more doses, allowing at least 5 seconds between doses, unless otherwise specified in the individual monograph. Discharge the device to waste, as before, until three doses remain. Collect the final three doses, allowing at least 5 seconds between doses. Note that the rate of discharges to waste should not be such to cause excessive canister cooling.

DRY POWDER INHALERS

Apparatus—Use *Apparatus B* as directed in *Sampling the Delivered Dose from Dry Powder Inhalers* under *Delivered-Dose Uniformity* at the appropriate airflow rate for testing.

Procedure—Proceed as directed for *Procedure* in *Sampling the Delivered Dose from Dry Powder Inhalers* under *Delivered-Dose Uniformity.* A single dose is defined as the number of actuations stated in the product labeling as the minimum recommended dose. Select a single inhaler and follow the labeled instructions for loading with powder, discharging and cleaning throughout. Collect a total of 10 doses—three doses at the beginning, four in the middle [(n/2) − 1 to (n/2) + 2, where n is the number of minimum recommended doses on the label], and three at the end—of the labeled contents following the labeled instructions. Prior to collecting each of the doses to be analyzed, clean the inhaler as directed in the labeling.

Particle Size

The particle or droplet size distribution in the spray discharged from metered-dose inhalers, and the particle size distribution in the cloud discharged from dry powder inhalers, are important characteristics used in judging inhaler performance. While particle size measurement by microscopy can be used to evaluate the number of large particles, agglomerates, and foreign particulates in the emissions of metered-dose inhalers (e.g., *Epinephrine Bitartrate Inhalation Aerosol*), whenever possible this test should be replaced with a method to determine the aerodynamic size distribution of the drug aerosol leaving the inhaler. The aerodynamic size distribution defines the manner in which an aerosol deposits during inhalation. When there is a log-normal distribution, the aerodynamic size distribution may be characterized by the mass median aerodynamic diameter (MMAD) and geometric standard deviation (GSD). The aerodynamic size distribution of the drug leaving metered-dose and dry powder inhalers is determined using *Apparatus 1, 2, 3, 4, 5,* or *6* as specified in this chapter. A fine particle dose or fine particle fraction can also be determined as that portion of the inhaler output having an aerodynamic diameter less than the size defined in the individual monograph. This may be expected to correlate with the drug dose or that fraction of the drug dose that penetrates the lung during inhalation. Individual monographs may also define the emitted fractions of the delivered dose in more than one aerodynamic size range.

AERODYNAMIC SIZE DISTRIBUTION

Cascade impaction devices classify aerosol particles and droplets on the basis of those particles' aerodynamic diameters. The principle of their operation, whereby they separate aerosol particles and droplets from a moving airstream on the basis of particle or droplet inertia, is shown in *Figure 3.*

Copyright (c) 2013 The United States Pharmacopeial Convention. All rights reserved.

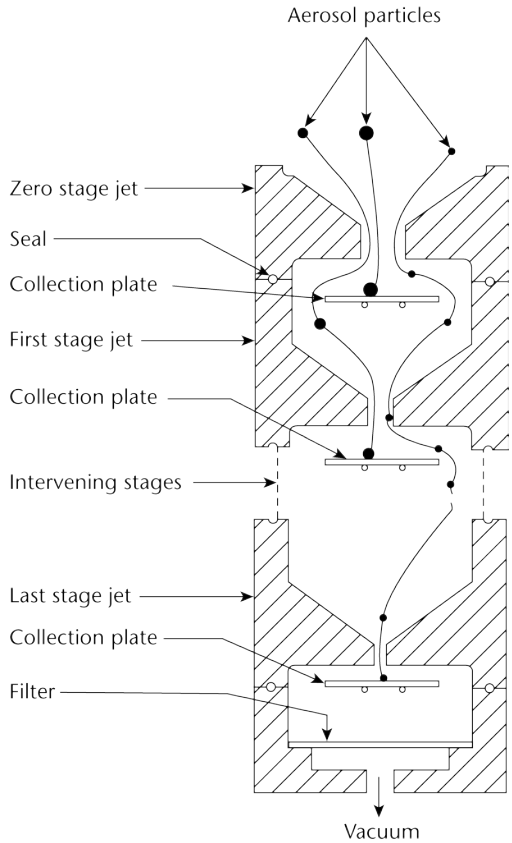

Fig. 3. Schematic representation of the principle of operation of cascade impactors. (A single jet per impactor stage is shown. Impactors with multiple jets in each stage function in the same manner.)

Because the dimensions of the induction port used to connect inhalers to the cascade impactors and impingers (shown in *Apparatus 1, 2, 3, 4, 5,* and *6*) also define the mass of drug that enters the aerodynamic sizing device, these are carefully defined and, where possible, are held constant between each apparatus (see *Figures 4, 6, 7, 8,* and *9*).

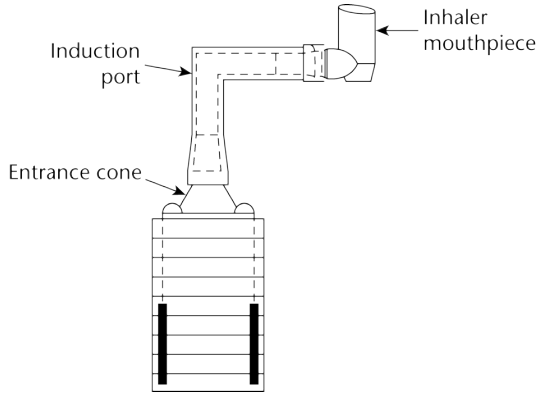

Fig. 4. Apparatus 1: Assembly of induction port and entrance cone mounted on cascade impactor.

Accessed from 167.78.4.19 by James Cumbie (ocean22) on Mon Sep 09 15:04:23 EDT 2013

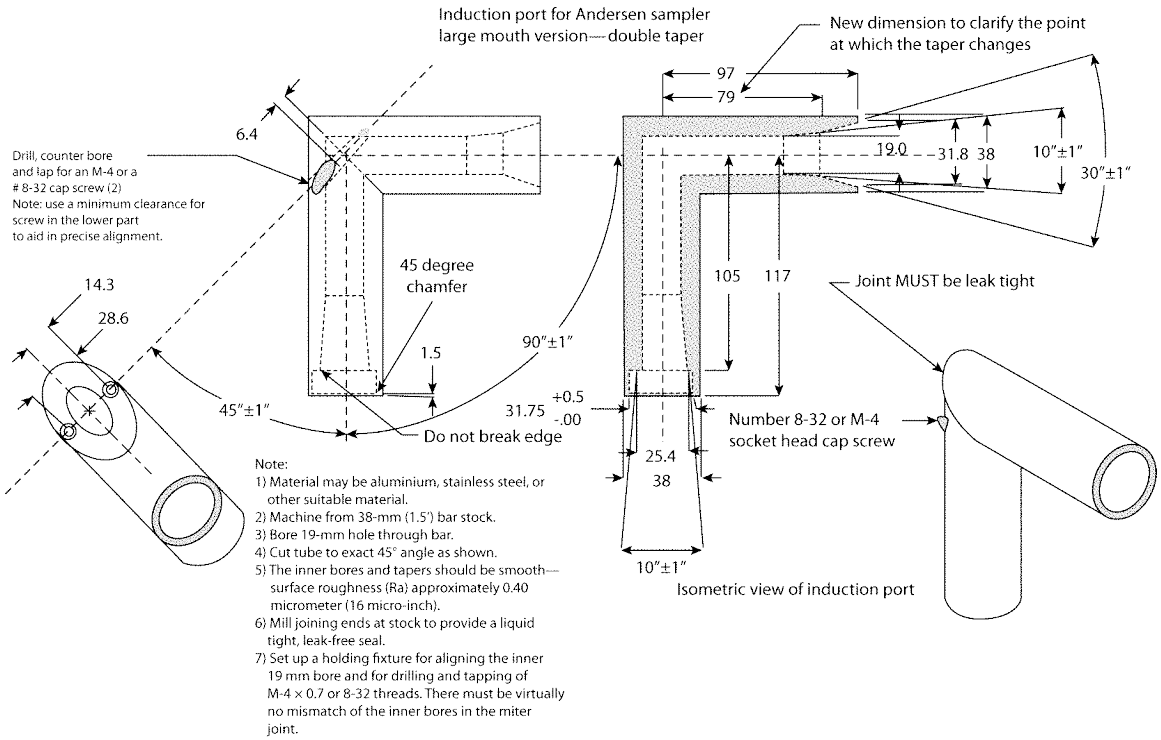

Fig. 4a. Apparatus 1: Expanded view of induction port for use with metered-dose and dry powder inhalers.

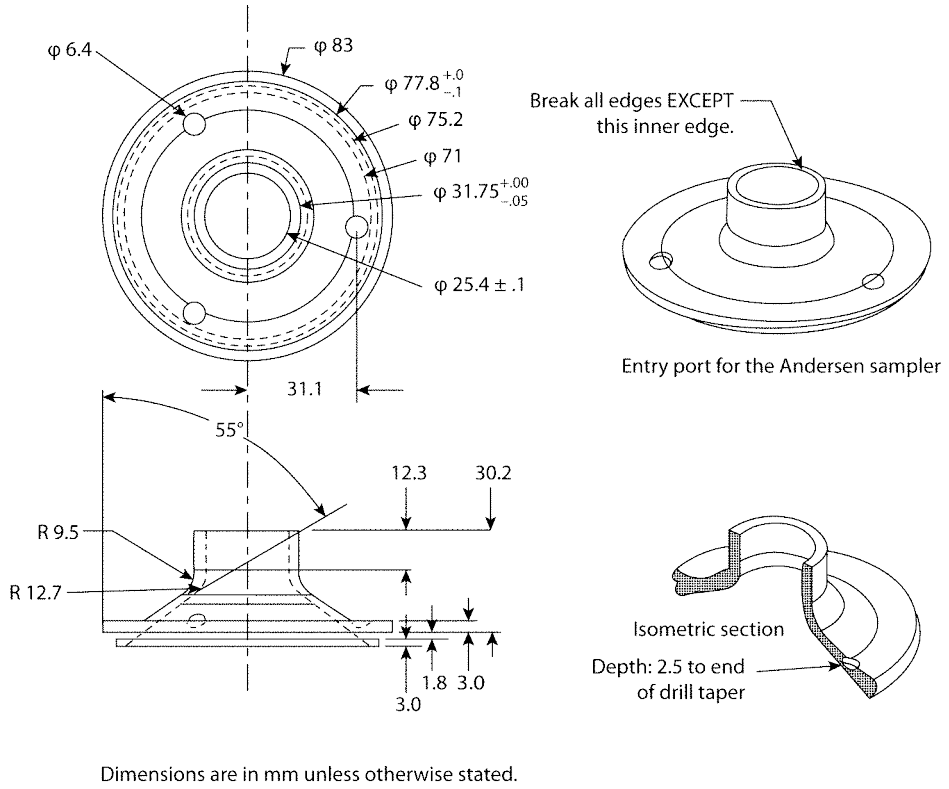

Fig. 4b. Apparatus 1: Expanded view of the entrance cone for mounting induction port on the Andersen cascade impactor without preseparator. Material may be aluminum, stainless steel, or other suitable material. Surface roughness (Ra) should be approximately 0.4 µm.

Copyright (c) 2013 The United States Pharmacopeial Convention. All rights reserved.

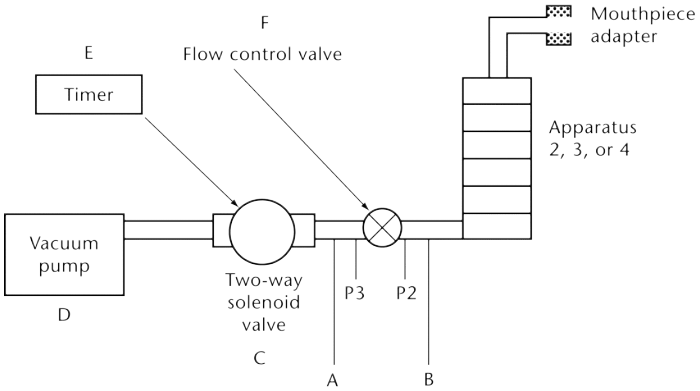

Fig. 5. Apparatus 2, 3, 4, or 5: General control equipment. (See *Table 3* for component specifications.)

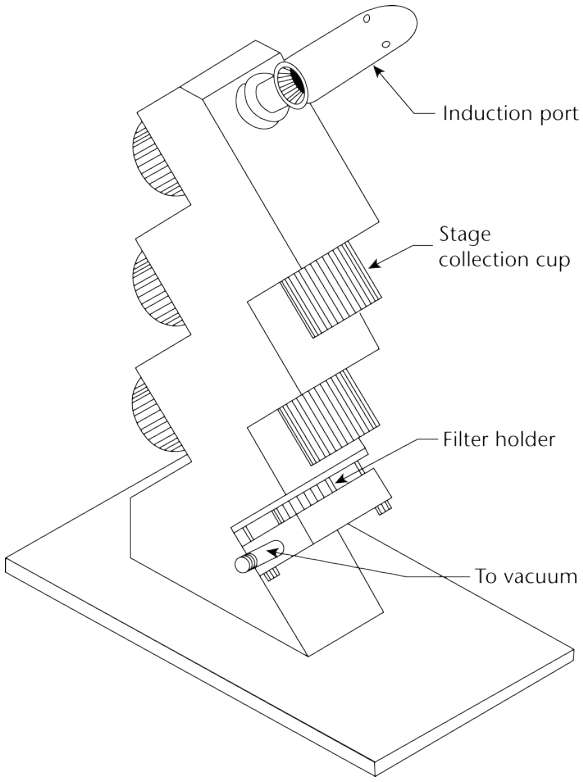

Fig. 6. Apparatus 2: Assembly of induction port, stage collector, and filter holder. (Marple-Miller impactor, Model 160 with USP induction port.)

Accessed from 167.78.4.19 by James Cumbie (ocean22) on Mon Sep 09 15:04:23 EDT 2013

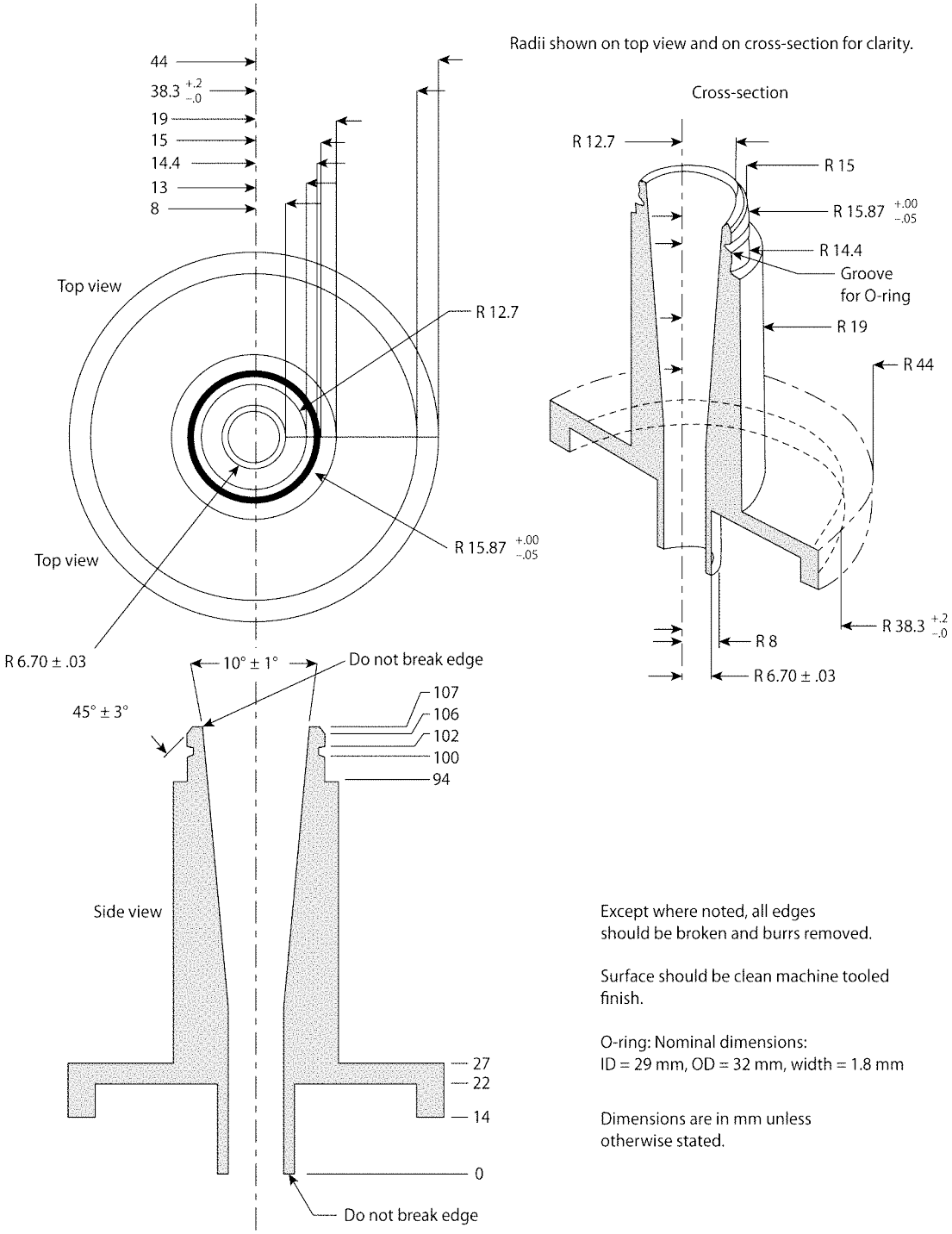

Fig. 7. Apparatus 3: Expanded views of top for the Andersen preseparator adapted to the USP induction port. Material may be aluminum, stainless steel, or other suitable material; interior bore should be polished to surface roughness (Ra) approximately 0.4 µm.

Copyright (c) 2013 The United States Pharmacopeial Convention. All rights reserved.

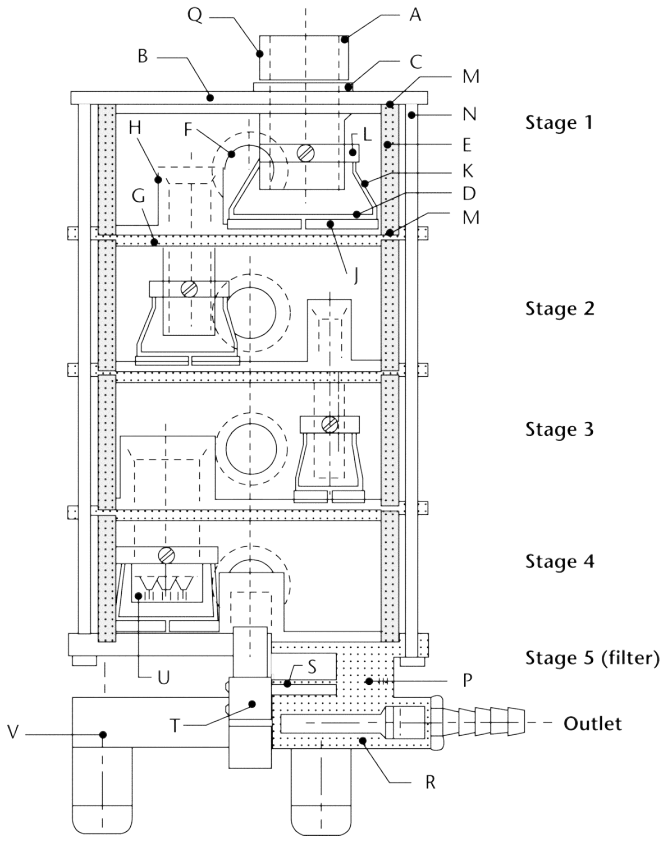

Fig. 8. Apparatus 4: Schematic of multistage liquid impinger. (See *Table 4* for component specifications.)

Because the size distributions produced by different impactors are often a function of impactor design and the airflow rate through them, there is a need to standardize the instruments that are used to test inhalers (i.e., *Apparatus 1* or *6* for metered-dose inhalers) or to provide guidelines on system suitability where different apparatuses may be used (i.e., *Apparatus 2, 3, 4,* or *5* for dry powder inhalers).

Because of the varied nature of the formulations and devices being tested, the cascade impaction system and technique selected for testing an inhaler should fulfill a number of criteria.

Stage Mensuration—Manufacturers of cascade impaction devices provide a definitive calibration for the separation characteristics of each impaction stage in terms of the relationship between the stage collection efficiency and the aerodynamic diameter of particles and droplets passing through it as an aerosol. Calibration is a property of the jet dimensions, the spatial arrangement of the jet and its collection surface, and the airflow rate passing through it. Because jets can corrode and wear over time, the critical dimensions of each stage, which define that impaction stage's calibration, must be measured on a regular basis. This process, known as stage mensuration, replaces the need for repetitive calibration (using standard aerosols) and ensures that only devices that conform to specifications are used for testing inhaler output. The process involves the measurement and adjustment of the critical dimensions of the instrument.

Interstage Drug Loss (wall losses)—Where method variations are possible and there is no apparatus specified in the monograph, the selected technique should ensure that not more than 5% of the inhaler's total delivered drug mass (into the impactor) is subject to loss between the impaction device's sample collection surfaces. In the event that interstage drug losses are known to be greater than 5%, either the procedure should be performed in such a way that wall losses are included along with the associated collection plate, or an alternative apparatus should be used. As an example, the following procedures described for *Apparatus 1* and *3* have been written to include wall losses along with the associated collection plate. Provided, however, that such losses are known to be less than or equal to 5% of the total delivered drug mass into the impactor and that there are no instructions to the contrary in an individual monograph, the technique may be simplified by only assaying drug on the collection plates.

Re-Entrainment—Where method variations are possible, the selected technique should seek to minimize particle re-entrainment (from an upper to a lower impaction stage) on stages that contribute to size fractions defined in the individual monograph, especially where this may affect the amounts of drug collected. Minimizing the number of sampled doses, the use of coated particle collection surfaces, and proving that multiple-dose techniques produce statistically similar results to those from smaller numbers of doses, are all methods that can be used for this purpose. In the event that re-entrainment cannot be avoided, the number of doses collected, the time interval between doses, and the total duration of airflow through the cascade impaction device should be standardized. Under these circumstances, the presentation of impaction data should not presume the validity of the impactor's calibration (i.e., aerodynamic diameter ranges should not be assigned to drug masses collected on specific stages).

By using appropriate assay methods and a suitable mensurated impaction device, aerodynamic particle size distributions can be determined for drugs leaving the mouthpieces of metered-dose or dry powder inhalers. If temperature or humidity limits for use of

Accessed from 167.78.4.19 by James Cumbie (ocean22) on Mon Sep 09 15:04:23 EDT 2013

the inhaler are stated on the label, it may be necessary to control the temperature and humidity of the air surrounding and passing through the device to conform to those limits. Ambient conditions are presumed, unless otherwise specified in individual monographs.

Mass Balance—In addition to the size distribution, good analytical practice dictates that a mass-balance be performed in order to confirm that the amount of the drug discharged from the inhaler, which is captured and measured in the induction port-cascade impactor apparatus, is within an acceptable range around the expected value. The total mass of drug collected in all of the components (material balance) divided by the total number of minimum recommended doses discharged is not less than 75% and not more than 125% of the average minimum recommended dose determined during testing for *Delivered-Dose Uniformity.* This is not a test of the inhaler but serves to ensure that the test results are valid.

Use one of the multistage impaction devices shown below, or an equivalent, to determine aerodynamic particle size distributions of drugs leaving the mouthpieces of metered-dose or dry powder inhalers. *Apparatus 1* and *6* [*Figures 4* and *9* (without preseparator), respectively] are intended for use with metered-dose inhalers at a single airflow rate. *Apparatus 2, 3, 4,* and *5* (*Figures 6, 7, 8,* and *9,* respectively) are intended for use with dry powder inhalers at the appropriate airflow rate, Q_{out}, determined earlier, provided that the value of Q_{out} falls in the range 30–100 L per minute.

NOTE—If Q_{out} is greater than 100 L per minute, testing should be performed with Q_{out} set at 100 L per minute; if Q_{out} is less than 30 L per minute, testing is performed with Q_{out} at 30 L per minute.

Apparatus 1 for Metered-Dose Inhalers—Use this apparatus, or an equivalent, at a flow rate of 28.3 L per minute (±5%), as specified by the manufacturer of the cascade impactor.

Design—The design and assembly of this apparatus and the induction port to connect the device to an inhaler are shown in *Figures 4, 4a,* and *4b*[1].

Critical engineering dimensions applied by manufacturers to the stages of *Apparatus 1* are provided in *Table 2*. During use, some occlusion and blockage of jet nozzles may occur and therefore, "in use" mensuration tolerances need to be justified.

Table 2. Critical Dimensions for the Jet Nozzles of *Apparatus 1*

Stage #	Number of Jets	Nozzle Diameter (mm)
0	96	2.55 ± 0.025
1	96	1.89 ± 0.025
2	400	0.914 ± 0.0127
3	400	0.711 ± 0.0127
4	400	0.533 ± 0.0127
5	400	0.343 ± 0.0127
6	400	0.254 ± 0.0127
7	201	0.254 ± 0.0127

Procedure—Set up the multistage cascade impactor as described in the manufacturer's literature with an after filter below the final stage to capture any fine particles that otherwise would escape from the device. To ensure efficient particle capture, coat the particle collection surface of each stage with glycerol, silicone oil, or other suitable liquid typically deposited from a volatile solvent, unless it has been demonstrated to be unnecessary. Attach the induction port and mouthpiece adapter to produce an airtight seal between the inhaler mouthpiece and the induction port as shown in *Figure 4.* Use a mouthpiece adapter that ensures that the tip of the inhaler mouthpiece is flush with the open end of the induction port. Ensure that the various stages of the cascade impactor are connected with airtight seals to prevent leaks. Turn on the vacuum pump to draw air through the cascade impactor, and calibrate the airflow through the system with an appropriate flowmeter attached to the open end of the induction port. Adjust the flow-control valve on the vacuum pump to achieve steady flow through the system at the required rate, and ensure that the airflow through the system is within ±5% of the flow rate specified by the manufacturer. Unless otherwise prescribed in the patient instructions, shake the inhaler for 5 seconds and discharge one delivery to waste. With the vacuum pump running, insert the mouthpiece into the mouthpiece adapter and immediately fire the minimum recommended dose into the cascade impactor. Keep the valve depressed for a duration sufficient to ensure that the dose has been completely discharged. If additional sprays are required for the sample, wait for 5 seconds before removing the inhaler from the mouthpiece adapter, shake the inhaler, reinsert it into the mouthpiece adapter, and immediately fire the next minimum recommended dose. Repeat until the required number of doses have been discharged. The number of minimum recommended doses discharged must be sufficient to ensure an accurate and precise determination of *Aerodynamic Size Distribution.* [NOTE—The number of minimum recommended doses is typically not greater than 10.] After the last dose has been discharged, remove the inhaler from the mouthpiece adapter. Rinse the mouthpiece adapter and induction port with a suitable solvent, and dilute quantitatively to an appropriate volume. Disassemble the cascade impactor, place each stage and its associated collection plate or filter in a separate container, and rinse the drug from each of them. [NOTE—If it has been determined that wall losses in the impactor are less than or equal to 5%, then the collection plates only may be used.]

Dilute each quantitatively to an appropriate volume. Using the method of analysis specified in the individual monograph, determine the mass of drug collected in each of the components. To analyze the data, proceed as directed under *Data Analysis.*

[1] A suitable cascade impactor is available as Model Mk II from Thermo-Electron, 27 Forge Parkway, Franklin, MA 02038. The impactor is used without the preseparator. The inhaler is connected to the impactor via the induction port, atop the entrance cone shown in *Figure 4.* If an equivalent impactor is employed, the induction port in *Figure 4a* should be used, although the entrance cone (*Fig. 4b*) should be replaced with one to fit the impactor in question. Note that the internal surfaces of the induction port (*Fig. 4a*) are designed to fit flush with their counterparts in the entrance cone (*Fig. 4b*). This design avoids aerosol capture at the junction of the two pipes.

Copyright (c) 2013 The United States Pharmacopeial Convention. All rights reserved.

Apparatus 2 for Dry Powder Inhalers—

Design—The design and assembly of *Apparatus 2,* and the induction port to connect the device to an inhaler, are shown in *Figure 6.*[2] [NOTE—The induction port is shown in detail in *Figure 4a.*] The impactor has five impaction stages and an after filter. At a volumetric airflow rate of 60 L per minute (the nominal flow rate, Q_n), the cutoff aerodynamic diameters $D_{50,Qn}$ of Stages 1 to 5 are 10, 5, 2.5, 1.25, and 0.625 µm, respectively. The after filter effectively retains aerosolized drug in the particle size range up to 0.625 µm. Set up the multistage cascade impactor with the control system as specified in *Figure 5.* To ensure efficient particle capture, coat the particle collection surface of each stage with glycerol, silicone oil, or other suitable liquid typically deposited from a volatile solvent, unless it has been demonstrated to be unnecessary. Assemble the impactor as described in the manufacturer's literature with an after filter below the final stage to capture any fine particles that otherwise would escape from the device. Attach the induction port and mouthpiece adapter to produce an airtight seal between the inhaler mouthpiece and the induction port. Use a mouthpiece adapter that ensures that the tip of the inhaler mouthpiece is flush with the open end of the induction port. Ensure that the various stages of the cascade impactor are connected with airtight seals to prevent leaks.

Turn on the vacuum pump, open the solenoid valve, and calibrate the airflow through the system as follows. Connect a flowmeter to the induction port. Use a flowmeter calibrated for the volumetric flow leaving the meter to directly determine Q_{out}, or, if such a meter is unobtainable, calculate the volumetric flow leaving the meter (Q_{out}) using the ideal gas law. For example, for a meter calibrated for the entering volumetric flow (Q_{in}), use the formula:

$$Q_{out} = Q_{in}P_0/(P_0 - \Delta P)$$

where P_0 is the atmospheric pressure and ΔP is the pressure drop over the meter. Adjust the flow-control valve to achieve a steady flow through the system at the required rate, Q_{out}, so that Q_{out} is within ±5% of the value determined during testing for *Delivered-Dose Uniformity.* Ensure that critical flow occurs in the flow-control valve, at the airflow rate to be used during testing, by using the following procedure. With the inhaler in place, and the intended flow running, measure the absolute pressure on both sides of the flow-control valve (P2 and P3 in *Figure 5*). A ratio of $P3/P2 \leq 0.5$ indicates critical flow. Switch to a more powerful pump, and remeasure the test flow rate if $P3/P2 > 0.5$. Adjust the timer controlling the operation of the two-way solenoid valve so that it opens this valve for a duration of T seconds as determined during testing for *Delivered-Dose Uniformity.* Prime or load the dry powder inhaler with powder for inhalation according to the labeled instructions. With the vacuum pump running and the two-way solenoid valve closed, insert the inhaler mouthpiece, held horizontally, into the induction port mouthpiece adapter. Discharge the powder into the apparatus by opening the two-way solenoid valve for a duration of T seconds. After the two-way solenoid valve has closed, remove the inhaler from the mouthpiece adapter. If additional doses are required for the sample, reload the inhaler according to the labeled instructions, reinsert the mouthpiece into the mouthpiece adapter, and repeat the operation until the required number of doses have been discharged. After discharge of the last dose, switch off the vacuum pump.

Rinse the mouthpiece adapter and induction port with a suitable solvent, and quantitatively dilute to an appropriate volume. Disassemble the cascade impactor, and place the after filter in a separate container. Rinse the drug from each of the stages and the filter, and quantitatively dilute each to an appropriate volume. Using the method of analysis specified in the individual monograph, determine the mass of drug collected in each of the components. Determine the cutoff diameters of each of the individual stages of the impactor, at the value of $Q = Q_{out}$ employed in the test by the formula:

$$D_{50,Q} = D_{50,Qn}(Q_n/Q)^{1/2}, \quad \text{(Eq. 1)}$$

where $D_{50,Q}$ is the cutoff diameter at the flow rate, Q, employed in the test, and the subscript, n, refers to the nominal values determined when Q_n equals 60 L per minute. Thus, when Q equals 40 L per minute, the cutoff diameter of Stage 2 is given by the formula:

$$D_{50,40LPM} = 5\ \mu m \times [60/40]^{1/2} = 6.1\ \mu m.$$

General Procedure—Perform the test using *Apparatus 2* at the airflow rate, Q_{out} determined earlier, during testing for *Delivered-Dose Uniformity,* provided Q_{out} is less than or equal to 100 L per minute. [NOTE—If Q_{out} is greater than 100 L per minute, use an airflow rate of 100 L per minute.] Connect the apparatus to a flow control system that is based upon critical (sonic) flow as specified in *Figure 5* (see also *Table 3*).

[2] The cascade impactor is available as the Model 160 Marple-Miller Impactor from MSP Corporation, Minneapolis, MN. The inhaler should be connected to the impactor via the induction port, shown in *Figure 4a.*

Accessed from 167.78.4.19 by James Cumbie (ocean22) on Mon Sep 09 15:04:23 EDT 2013

Table 3. Component Specifications for *Figure 5*

Code	Item	Description	Dimensions
A	Connector	(e.g., short metal coupling with low diameter branch to P3)	≥ 8-mm ID
B	Vacuum tubing	(e.g., silicon tubing with an outside diameter of 14 mm and an internal diameter of 8 mm)	A length of suitable tubing ≥8 mm ID with an internal volume of 25 ± 5 mL.
C	Two-way solenoid valve[a]	See *Fig. 5*	2-way, 2-port solenoid valve having an ID ≥8 mm and an opening response time of ≤100 milliseconds.
D	Vacuum pump[b]	See *Fig. 5*	Pump must be capable of drawing the required flow rate through the assembled apparatus with the dry powder inhaler in the mouthpiece adapter. Connect the pump to the solenoid valve using short and wide (≥ 10-mm ID) vacuum tubing and connectors to minimize pump capacity requirements.
E	Timer[c]	See *Fig. 5*	The timer switches current directly to the solenoid valve for the required duration.
P2, P3	Pressure measurements		Determine under steady-state flow conditions with an absolute pressure transducer.
F	Flow control valve[d]	See *Fig. 5*	Adjustable regulating valve with maximum $C_v \geq 1$.

[a]An example being ASCO product number 8030G13 (Automatic Switch Company, 60 Hanover Road, Florham Park, NJ 07932) or equivalent. See also Footnote *h* in *Table 1*.
[b]Gast product type 1023, 1423, or 2565 (Gast Manufacturing Inc., PO Box 97, Benton Harbor, MI 49022) or equivalent.
[c]An example being Eaton Product number 45610-400 (Eaton Corporation, Automotive Products Division, 901 South 12th Street, Watertown, WI 53094) or equivalent.
[d]Parker Hannifin type 8FV12LNSS, or equivalent (Parker Hannifin plc, Riverside Road, Barnstable, Devon EX31 1NP, UK). See also Footnote *h* in *Table 1*.

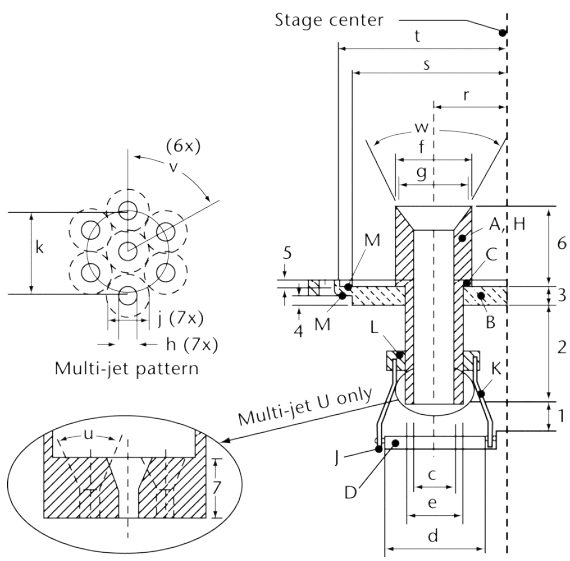

Fig. 8a. Apparatus 4: Details of jet tube and impaction plate. Inserts show end of multi-jet tube U leading to Stage 4. (See *Table 5* for dimension specifications.)

Copyright (c) 2013 The United States Pharmacopeial Convention. All rights reserved.

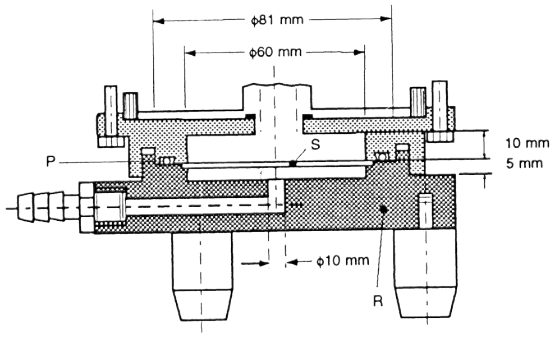

Fig. 8b. Apparatus 4: Expanded view of Stage 5. (See *Table 4* for component specifications.)

Table 4. Component Units of Multistage Liquid Impinger (see *Fig. 8*)

Code[1]	Item	Description	Dimensions[2]
A,H	Jet tube	Metal tube screwed onto partition wall sealed by gasket (C), polished inner surface	see *Figure 8a*
B,G	Partition wall	Circular metal plate, diameter	120
		Thickness	see *Figure 8a*
C	Gasket	e.g., PTFE	to fit jet tube
D	Impaction plate	Porosity O sintered-glass disk,	
		Diameter	see *Figure 8a*
E	Glass cylinder	Plane polished cut glass tube	
		Height, including gaskets	46
		Outer diameter	100
		Wall thickness	3.5
		Sampling port (F) diameter	18
		Stopper in sampling port	ISO 24/25
J	Metal frame	L-profiled circular frame with slit	
		Inner diameter	to fit impaction plate
		Height	4
		Thickness of horizontal section	0.5
		Thickness of vertical section	2
K	Wire	Steel wire interconnecting metal frame and sleeve (two for each frame)	
		Diameter	1
L	Sleeve	Metal sleeve secured on jet tube by screw	
		Inner diameter	to fit jet tube
		Height	6
		Thickness	5
M	Gasket	e.g., silicone	to fit glass cylinder
N	Bolt	Metal bolt with nut (six pairs), length	205
		Diameter	4
P	O-ring	Rubber O-ring, diameter × thickness	66.34 × 2.62
Q	O-ring	Rubber O-ring, diameter × thickness	29.1 × 1.6
R	Filter holder	Metal housing with stand and outlet	see *Figure 8b*
S	Filter support	Perforated sheet metal, diameter	65
		Hole diameter	3
		Distance between holes (center-points)	4
T	Snap-locks		
U	Multi-jet tube	Jet tube (H) ending in multijet arrangement	see inserts *Figure 8a*
V	Outlet	Outlet and nozzle for connection to vacuum	Internal diameter ≥ 10 (*Figure 8b*)

[1]See *Fig. 8*.
[2]Measurements in mm unless otherwise stated.

Accessed from 167.78.4.19 by James Cumbie (ocean22) on Mon Sep 09 15:04:23 EDT 2013

Table 5. Apparatus 4: Dimensions[1] of Jet Tube with Impaction Plate (see *Fig. 8a*).

Type	Code[2]	Stage 1	Stage 2	Stage 3	Stage 4	Filter (Stage 5)
Distance	1	9.5 (–.0, +.5)	5.5 (–.0, +.5)	4.0 (–.0, +.5)	6.0 (–.0, +.5)	n.a.
Distance	2	26	31	33	30.5	0
Distance	3	8	5	5	5	5
Distance	4	3	3	3	3	n.a.
Distance	5	0	3	3	3	3
Distance	6[3]	20	25	25	25	25
Distance	7	n.a.	n.a.	n.a.	8.5	n.a.
Diameter	c	25	14	8.0(±0.1)	21	14
Diameter	d	50	30	20	30	n.a.
Diameter	e	27.9	16.5	10.5	23.9	n.a.
Diameter	f	31.75 (–.05, +.00)	22	14	31	22
Diameter	g	25.4	21	13	30	21
Diameter	h	n.a.	n.a.	n.a.	2.70 (±.05)	n.a.
Diameter	j	n.a.	n.a.	n.a.	6.3	n.a.
Diameter	k	n.a.	n.a.	n.a.	12.6	n.a.
Radius[4]	r	16	22	27	28.5	0
Radius[4]	s	46	46	46	46	n.a.
Radius[4]	t	n.a.	50	50	50	50
Angle	w	10°	53°	53°	53°	53°
Angle	u	n.a.	n.a.	n.a.	45°	n.a.
Angle	v	n.a.	n.a.	n.a.	60°	n.a.

[1]Measurements in mm with tolerances according to ISO 2768-m, unless otherwise stated.
[2]See *Fig. 8a.*
[3]Including gasket.
[4]Relative centerline of stage compartment.
n.a.: not applicable.

Under steady flow conditions, at the appropriate volumetric airflow rate through the entire apparatus, ensure that critical (sonic) flow occurs in the flow control valve by determining the individual values for absolute pressure, P2 and P3, so that their ratio P3/P2 is less than or equal to 0.5. Coat the particle collection surface of each of the stages of the cascade impactor to ensure that particles that have impacted on a given stage are not re-entrained in the flowing airstream, unless this has been shown to be unnecessary. Analyze the data as directed under *Data Analysis.*

Apparatus 3 for Dry Powder Inhalers—

Design—Apparatus 3 is identical to *Apparatus 1 (Figure 4),* except that the manufacturer's preseparator is added atop Stage 0 to collect large masses of noninhalable powder prior to their entry into the impactor, and the outlet nipple, used to connect to vacuum tubing B *(Figure 5),* is replaced with one having an internal diameter ≥ 8 mm. To connect the preseparator of the impactor to the induction port *(Figure 4a),* a specially designed top for the preseparator must be used. This is shown in *Figure 7.*[3] The impactor, therefore, has eight stages, a preseparator (to collect large particulates), and an after filter. At a volumetric airflow rate of 28.3 L per minute (the nominal flow rate, Q_n), the cutoff aerodynamic diameters $D_{50,Qn}$ of Stages 0 to 7 are 9.0, 5.8, 4.7, 3.3, 2.1, 1.1, 0.7, and 0.4 µm, respectively. The after filter effectively retains aerosolized drug in the particle size range up to 0.4 µm. Connect the cascade impactor into the control system specified in *Figure 5.* Omit Stage 6 and Stage 7 from the impactor if the test flow rate, Q_{out}, used during testing for *Delivered-Dose Uniformity* was greater than or equal to 60 L per minute. To ensure efficient particle capture, coat the particle collection surface of each stage with glycerol, silicone oil, or other suitable liquid typically deposited from a volatile solvent, unless it has been demonstrated to be unnecessary. Assemble the impactor as described in the manufacturer's literature with an after filter below the final stage to capture any fine particles that otherwise would escape from the device. Place an appropriate volume (up to 10 mL) of an appropriate solvent into the preseparator, or coat the particle collection surfaces of the preseparator to prevent re-entrainment of impacted particles. [*Caution—Some solvents form flammable vapor-air mixtures that may be ignited during passage through a vacuum pump. Take appropriate precautions (alternative solvents, use of vapor traps, minimal pump operating times, etc.) to ensure operator safety during testing.*] Attach a molded mouthpiece adapter to the end of the induction port to produce an airtight seal between the inhaler mouthpiece and the induction port. Use a mouthpiece adapter that ensures that the tip of the inhaler mouthpiece is flush with the open end of the induction port. Ensure that the various stages of the cascade impactor are connected with airtight seals to prevent leaks.

Turn on the vacuum pump, open the two-way solenoid valve, and calibrate the airflow through the system as follows. Prime or load the dry powder inhaler with powder for inhalation according to the labeled instructions. With the vacuum pump running and the two-way solenoid valve closed, insert the inhaler mouthpiece, held horizontally, into the induction port mouthpiece adapter. Once the inhaler is positioned, discharge the powder into the apparatus by activating the timer and opening the two-way solenoid valve for the required duration, T ± 5%, as determined during testing for *Delivered-Dose Uniformity.* After the two-way solenoid valve has closed, remove the inhaler from the mouthpiece adapter. If additional doses are required for the sample, reload the inhaler according to the labeled instructions, reinsert the mouthpiece into the mouthpiece adapter, and repeat the operation until the

[3]The cascade impactor is available as the Andersen 1ACFM Non-Viable Cascade Impactor (Mark II) from Thermo-Electron, 27 Forge Parkway, Franklin, MA 02038. The impactor is used with the preseparator.

Copyright (c) 2013 The United States Pharmacopeial Convention. All rights reserved.

required number of doses have been discharged. After discharge of the last dose, remove the inhaler from the mouthpiece adapter, and switch off the vacuum pump.

Carefully disassemble the apparatus. Using a suitable solvent, rinse the drug from the mouthpiece adapter, induction port, and preseparator, and quantitatively dilute to an appropriate volume. Rinse the drug from each stage, and the impaction plate immediately below, into appropriately sized flasks. Quantitatively dilute each flask to an appropriate volume. Using the method of analysis specified in the individual monograph, determine the mass of drug collected in each of the samples. The aerodynamic cutoff diameters of the individual stages of this device, in the airflow range between 30 and 100 L per minute, are currently not well established. Do not use the formula in Equation 1 to calculate cutoff diameters.

Procedure—Proceed as directed in the *General Procedure* under *Apparatus 2*, except to use *Apparatus 3.*

Apparatus 4 for Dry Powder Inhalers—

NOTE—*Apparatus 4,* the multistage liquid impinger, has a small number of stages and is used extensively outside the USA. It is provided here for the benefit of users in countries other than the USA.

Design—The design and assembly of *Apparatus 4* are shown in *Figs. 8*, *8a,* and *8b*.[4] The induction port, used to connect the device to an inhaler, is shown in *Fig. 4a*. The device is a multi-stage liquid impinger consisting of impaction Stages 1, 2, 3, and 4 and an integral after filter (Stage 5). The collection stages of the liquid impinger (see *Fig. 8* and *Table 4*) are kept moist, unlike those of traditional impactors, such as *Apparatus 1, 2, 3, 5,* and *6;* wetting may produce an effect similar to coating the stages of *Apparatus 2, 3, 5,* and *6* at certain flow rates, although this should be confirmed by demonstrating control over re-entrainment as described earlier. An impaction stage comprises an upper horizontal metal partition wall (B) through which a metal inlet jet tube (A) with its impaction plate (D) is protruding; a glass cylinder (E) with sampling port (F), forming the vertical wall of the stage; and a lower horizontal metal partition wall (G) through which a jet tube (H) connects to the lower stage. The tube into Stage 4 (U) ends in a multi-jet arrangement. The impaction plate (D) is secured in a metal frame (J), which is fastened by two wires (K) to a sleeve (L) secured on the jet tube (C). For more detail of the jet tube and impaction plate, see *Fig. 8a.* The horizontal plane of the collection plate is perpendicular to the axis of the jet tube and centrally aligned. The upper surface of the impaction plate is slightly raised above the edge of the metal frame. A recess around the perimeter of the horizontal partition wall guides the position of the glass cylinder. The glass cylinders are sealed against the horizontal partition walls with gaskets (M) and clamped together by six bolts (N). The sampling ports are sealed by stoppers. The bottom side of the lower partition wall of Stage 4 has a concentric protrusion fitted with a rubber O-ring (P) that seals against the edge of a filter placed in the filter holder. The filter holder (R) is a basin with a concentric recess in which a perforated filter support (S) is flush-fitted. The filter holder is designed for 76-mm diameter filters. The whole impaction stage assembly is clamped onto the filter holder by two snap locks (T). The impinger is equipped with an induction port (*Fig. 4a*) that fits onto the Stage 1 inlet jet tube. A rubber O-ring on the jet tube provides an airtight connection to the induction port. An elastomeric mouthpiece adapter to fit the inhaler being tested provides an airtight seal between the inhaler and the induction port.

At a volumetric airflow rate of 60 L per minute (the nominal flow rate, Q_n), the cutoff aerodynamic diameters $D_{50,Qn}$ of Stages 1 to 4 are 13.0, 6.8, 3.1, and 1.7 µm, respectively. The after filter effectively retains aerosolized drug in the particle size range up to 1.7 µm. Ensure that *Apparatus 4* is clean and free of drug solution from any previous tests. Place a 76-mm diameter filter in the filter stage, and assemble the apparatus. Use a low pressure filter capable of quantitatively collecting the passing drug aerosol, which also allows a quantitative recovery of the collected drug. Set up *Apparatus 4* using the control system as specified in *Figure 5.* Attach the induction port *(Figure 4a)* and mouthpiece adapter to produce an airtight seal between the inhaler mouthpiece and the induction port. Use a mouthpiece adapter that ensures that the tip of the inhaler mouthpiece is flush with the open end of the induction port. Ensure that the various stages of the apparatus are connected with airtight seals to prevent leaks. Turn on the vacuum pump, open the two-way solenoid valve, and calibrate the airflow through the system as follows. Connect a flowmeter, calibrated for the volumetric flow rate leaving the meter, to the induction port. Adjust the flow-control valve to achieve a steady flow through the system at the required rate, Q_{out}, so that Q_{out} is within ±5% of the value determined during testing for *Delivered-Dose Uniformity.* Ensure that critical flow occurs in the flow-control valve, at the value of Q_{out} to be used during testing, using the following procedure. With the inhaler in place, and the intended flow running, measure the absolute pressure on both sides of the flow-control valve (P2 and P3 in *Figure 5*). A ratio of $P3/P2 \leq 0.5$ indicates critical flow. Switch to a more powerful pump, and remeasure the test flow rate if $P3/P2 > 0.5$. Adjust the timer controlling the operation of the two-way solenoid valve so that it opens that valve for the same duration, T, as used during testing for *Delivered-Dose Uniformity.* Dispense 20 mL of a solvent, capable of dissolving the drug, into each of the four upper stages of *Apparatus 4*, and replace the stoppers. [*Caution—Some solvents form flammable vapor-air mixtures that may be ignited during passage through a vacuum pump. Take appropriate precautions (alternative solvents, use of vapor traps, minimal pump operating times, etc.) to ensure operator safety during testing.*] Tilt the apparatus to wet the stoppers, thereby neutralizing their electrostatic charge. Adjust the timer controlling the operation of the two-way solenoid valve so that it opens the valve for the same duration, *T,* as used during testing for *Delivered-Dose Uniformity.* Prime or load the dry powder inhaler with powder for inhalation according to the labeled instructions. With the vacuum pump running and the two-way solenoid valve closed, insert the inhaler mouthpiece, held horizontally, into the induction port mouthpiece adapter. Discharge the powder into the apparatus by activating the timer and opening the two-way solenoid valve for the required duration, T ± 5%. After the two-way solenoid valve has closed, remove the inhaler from the mouthpiece adapter. If additional doses are required for the sample, reload the inhaler according to the labeled instructions, reinsert the mouthpiece into the mouthpiece adapter, and repeat the operation until the required number of doses have been discharged. After discharge of the last dose, switch off the vacuum pump.

Dismantle the filter stage of *Apparatus 4.* Carefully remove the filter, and extract the drug with solvent. Rinse the mouthpiece adapter and induction port with a suitable solvent, and quantitatively dilute to an appropriate volume. Rinse the inside of the inlet jet tube to Stage 1 *(Figure 8),* allowing the solvent to flow into the stage. Rinse the drug from the inner walls and the collection plate of each of the four upper stages of the apparatus, into the solution in the respective stage, by tilting and rotating the apparatus, while ensuring that no liquid transfer occurs between the stages. Using the method of analysis specified in the individual

[4]The five-stage impinger is available from Copley Instruments, plc, Nottingham, UK. The inhaler should be connected to the impactor via the induction port, shown in *Fig. 4* and *Fig. 4a.*

Accessed from 167.78.4.19 by James Cumbie (ocean22) on Mon Sep 09 15:04:23 EDT 2013

monograph, determine the mass of drug collected in each of the six volumes of solvent. Ensure that the method corrects for possible evaporation of the solvent during the test. This may involve the use of an internal standard (of known original concentration in the solvent and assayed at the same time as the drug) or the quantitative transfer of the liquid contents from each of the stages, followed by dilution to a known volume. Determine the cutoff diameters of each of the individual stages of the impactor, at the value of $Q = Q_{out}$ employed in the test by the formula:

$$D_{50,Q} = D_{50,Qn} (Q_n/Q)^{1/2}$$

where $D_{50,Q}$ is the cutoff diameter at the flow rate, Q, employed in the test, and the subscript, n, refers to the nominal values determined when Q_n equals 60 L of air per minute. Thus, when Q equals 40 L of air per minute, the cutoff diameter of Stage 2 is given by the formula:

$$D_{50,40LPM} = 6.8\ \mu m \times (60/40)^{1/2} = 8.3\ \mu m.$$

Procedure—Proceed as directed in the *General Procedure* under *Apparatus 2*, except to use *Apparatus 4.*

Apparatus 5 for Dry Powder Inhalers—

Design—The design and assembly of *Apparatus 5*[5] are shown in *Figures 9, 9a, 9b, 9c,* and *9d.* The induction port, used to connect the device to an inhaler, is shown in *Figure 4a.* The device is a cascade impactor with seven stages and a micro-orifice collector (MOC). Over the design flow-rate range of 30 to 100 L per minute, the 50% efficiency cut-off diameters of the stages (D_{50} values) range between 0.24 µm to 11.7 µm, evenly spaced on a logarithmic scale. In the design flow-rate range, there are always at least five stages with D_{50} values between 0.5 µm and 6.5 µm. The collection efficiency curves for each stage are sharp and minimize overlap between stages. Material may be aluminum, stainless steel, or other suitable material.

The impactor layout has removable impaction cups with all the cups in one plane (*Figures 9–9c*). There are three main sections to the impactor: the bottom frame that holds the impaction cups, the seal body that holds the jets, and the lid that contains the interstage passageways (shown in *Figures 9–9b*). Multiple nozzles are used at all but the first stage *(Figure 9c).* The flow passes through the impactor in a saw-tooth pattern.

Stage mensuration is performed periodically together with confirmation of other dimensions critical to the effective operation of the impactor. Critical dimensions are provided below in *Table 6.*

In routine operation, the seal body and lid are held together as a single assembly. The impaction cups are accessible when this assembly is opened at the end of an inhaler test. The cups are held in a support tray, so that all cups can be removed from the impactor simultaneously by lifting out the tray.

An induction port with internal dimensions identical to those defined in *Figure 4a* is connected to the impactor inlet. When necessary, with dry powder inhalers, a preseparator can be added to avoid overloading the first stage. This preseparator connects between the induction port and the impactor. A suitable mouthpiece adapter is used to provide an airtight seal between the inhaler and the induction port.

At a volumetric airflow rate of 60 L per minute (the assigned reference flow rate for cutoff-diameter calculations, Q_n), the cutoff-aerodynamic diameters $D_{50,Qn}$ of Stages 1 to 7 are 8.06, 4.46, 2.82, 1.66, 0.94, 0.55 and 0.34 µm, respectively. The apparatus contains a terminal micro-orifice collector (MOC) that for most formulations may eliminate the need for a final filter as determined

Table 6. Critical Dimensions for Apparatus 5 and 6

Description	Dimension (mm)
Preseparator (dimension a—see *Figure 9d*)	12.80 ± 0.05
Stage 1[1] Nozzle diameter	14.30 ± 0.05
Stage 2[1] Nozzle diameter	4.88 ± 0.04
Stage 3[1] Nozzle diameter	2.185 ± 0.02
Stage 4[1] Nozzle diameter	1.207 ± 0.01
Stage 5[1] Nozzle diameter	0.608 ± 0.01
Stage 6[1] Nozzle diameter	0.323 ± 0.01
Stage 7[1] Nozzle diameter	0.206 ± 0.01
MOC [1]	approximately 0.070
Cup Depth (Dimension b—see *Figure 9b*)	14.625 ± 0.10
Collection cup surface roughness	0.5 to 2 µm
Stage 1 Nozzle to seal body distance[2]—dimension c	0 ± 1.18
Stage 2 Nozzle to seal body distance[2]—dimension c	5.236 ± 0.736
Stage 3 Nozzle to seal body distance[2]—dimension c	8.445 ± 0.410
Stage 4 Nozzle to seal body distance[2]—dimension c	11.379 ± 0.237
Stage 5 Nozzle to seal body distance[2]—dimension c	13.176 ± 0.341
Stage 6 Nozzle to seal body distance[2]—dimension c	13.999 ± 0.071
Stage 7 Nozzle to seal body distance[2]—dimension c	14.000 ± 0.071
MOC Nozzle to seal body distance[2]—dimension c	14.429 – 14.571

[1]See *Figure 9c.*
[2]See *Figure 9b.*

[5]The cascade impactor is available as the Next Generation Pharmaceutical Impactor from MSP Corporation, Minneapolis, MN.

Copyright (c) 2013 The United States Pharmacopeial Convention. All rights reserved.

by method validation. The MOC is an impactor nozzle plate and collection cup. The nozzle plate contains, nominally, 4032 jets, each approximately 70 µm in diameter. Most particles not captured on Stage 7 of the impactor will be captured on the cup surface below the MOC. (For impactors operated at 60 L per minute, the MOC is capable of collecting 80% of 0.14-µm particles). For formulations with a significant fraction of particles not captured by the MOC, there is an optional filter holder that can replace the MOC or be placed downstream of the MOC containing a suitable after-filter (glass fiber is often suitable).

Procedure—Assemble the apparatus with the preseparator *(Figure 9d),* unless experiments have shown that its omission does not result in increased interstage drug losses (>5%) or particle re-entrainment, in which case the preseparator may be omitted.

Place cups into the apertures in the cup tray. To ensure efficient particle capture, coat the particle collection surface of each stage with glycerol, silicone oil, or other suitable liquid typically deposited from a volatile solvent, unless it has been demonstrated to be unnecessary. Insert the cup tray into the bottom frame, and lower into place. Close the impactor lid with the seal body attached, and operate the handle to lock the impactor together so that the system is airtight.

The preseparator may be assembled as follows: assemble the preseparator insert into the preseparator base; fit the preseparator base to the impactor inlet; add 15 mL of the solvent used for sample recovery to the central cup of the preseparator insert; place the preseparator body on top of this assembly; and close the two catches. [*Caution—Some solvents form flammable vapor-air mixtures that may be ignited during passage through a vacuum pump. Take appropriate precautions (e.g., alternative solvents, use of vapor traps, minimal pump operating times, etc.) to ensure operator safety during testing.*]

Connect an induction port with internal dimensions as defined in *Figure 4a* either to the impactor inlet or to the preseparator inlet atop the cascade impactor *(Figure 9d).* Place a suitable mouthpiece adapter in position at the end of the induction port so that the mouthpiece end of the inhaler, when inserted, lines up along the horizontal axis of the induction port. The front face of the inhaler mouthpiece is flush with the front face of the induction port, producing an airtight seal. When attached to the mouthpiece adapter, the inhaler should be positioned in the same orientation as intended for use. Connect the apparatus to a flow system according to the scheme specified in *Figure 5*.

Unless otherwise prescribed, conduct the test at the flow rate used in the test for *Delivered-Dose Uniformity* drawing 4 L of air from the mouthpiece of the inhaler and through the apparatus. Connect a flowmeter to the induction port. Use a flowmeter calibrated for the volumetric flow leaving the meter, or calculate the volumetric flow leaving the meter (Q_{out}) using the ideal gas law. For a meter calibrated for the entering volumetric flow (Q_{in}), use the formula:

$$Q_{out} = Q_{in}P_0/(P_0 - \Delta P)$$

where P_0 is the atmospheric pressure and ΔP is the pressure drop over the meter. Adjust the flow control valve to achieve steady flow through the system at the required rate, Q_{out} (±5%). Ensure that critical flow occurs in the flow-control valve by the procedure described for *Apparatus 2.* Adjust the timer controlling the operation of the two-way solenoid valve so that it opens the valve for the same duration, T, as used during testing for *Delivered-Dose Uniformity.*

Prime or load the dry powder inhaler with powder for inhalation according to the labeled instructions. With the vacuum pump running and the two-way solenoid valve closed, insert the inhaler mouthpiece, held horizontally, into the induction port mouthpiece adapter. Discharge the powder into the apparatus by activating the timer and opening the two-way solenoid valve for the required duration, T(±5%). After the two-way solenoid valve has closed, remove the inhaler from the mouthpiece adapter. If additional doses are required for the sample, reload the inhaler according to the labeled instructions, reinsert the mouthpiece into the mouthpiece adapter, and repeat the operation until the required number of doses have been discharged. After discharge of the last dose, switch off the vacuum pump.

Dismantle the apparatus, and recover drug for analysis as follows: remove the induction port and mouthpiece adapter from the preseparator and extract the drug into an aliquot of solvent; if used, remove the preseparator from the impactor, without spilling the solvent into the impactor; and recover the active ingredient from all inner surfaces.

Open the impactor by releasing the handle and lifting the lid. Remove the cup tray, with the collection cups, and recover the active ingredient from each cup into an aliquot of solvent. Using the method of analysis specified in the individual monograph, determine the mass of drug contained in each of the aliquots of solvent.

Determine the cutoff diameters of each of the individual stages of the impactor, at the value of $Q = Q_{out}$ employed in the test by the formula:

$$D_{50,Q} = D_{50,Qn}\,(Q_n/Q)^x, \quad \text{(Eq. 2)}$$

where $D_{50,Q}$ is the cutoff diameter at the flow rate, Q employed in the test, and the subscript, n, refers to the nominal or reference value for Q_n = 60 L of air per minute (see *Table 7*). The values for the exponent, x, are listed in *Table 7*. Thus, when Q = 40 L of air per minute, the cutoff diameter of Stage 2 is given by the formula:

$$D_{50,40LPM} = 4.46\ \mu m \times (60/40)^{0.52} = 5.51\ \mu m.$$

Analyze the data as directed under *Data Analysis.*

Accessed from 167.78.4.19 by James Cumbie (ocean22) on Mon Sep 09 15:04:23 EDT 2013

Table 7. Cutoff Aerodynamic Diameter for Stages of *Apparatus 5* and *6*

Use Eq. 2 to calculate $D_{50,O}$ for flow rates, Q, in the range 30 to 100 L per minute with Q_n = 60 L per minute.		
Stage	**$D_{50,On}$**	**x**
1	8.06	0.54
2	4.46	0.52
3	2.82	0.50
4	1.66	0.47
5	0.94	0.53
6	0.55	0.60
7	0.34	0.67

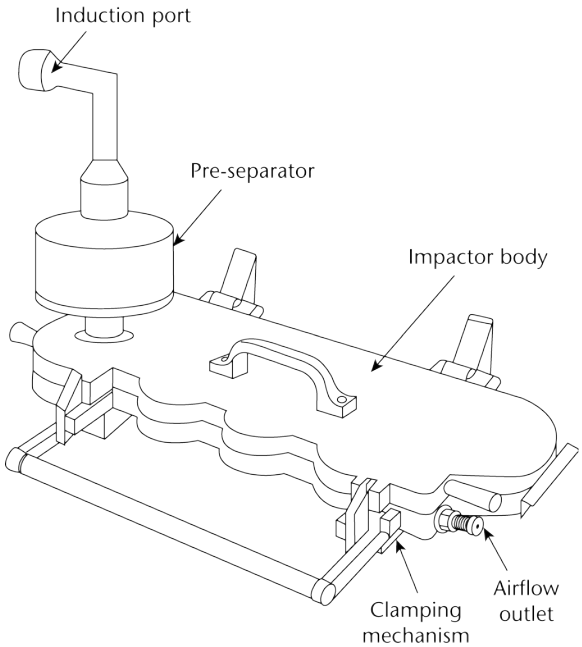

Fig. 9. Apparatus 5 (shown with the preseparator in place).

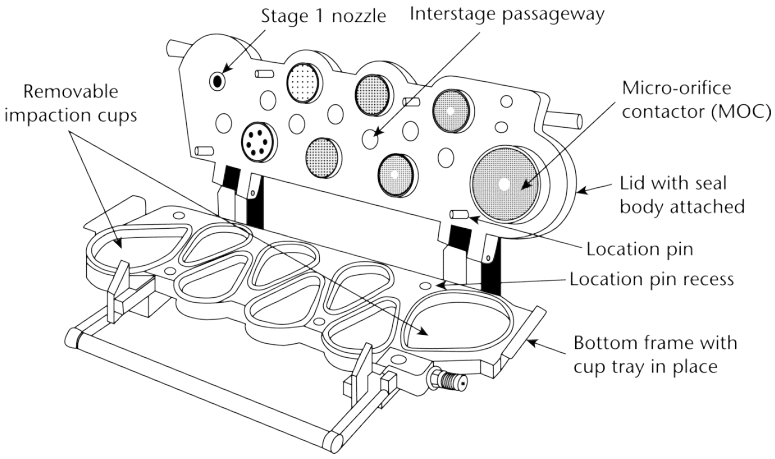

Fig. 9a. Components of *Apparatus 5*.

Copyright (c) 2013 The United States Pharmacopeial Convention. All rights reserved.

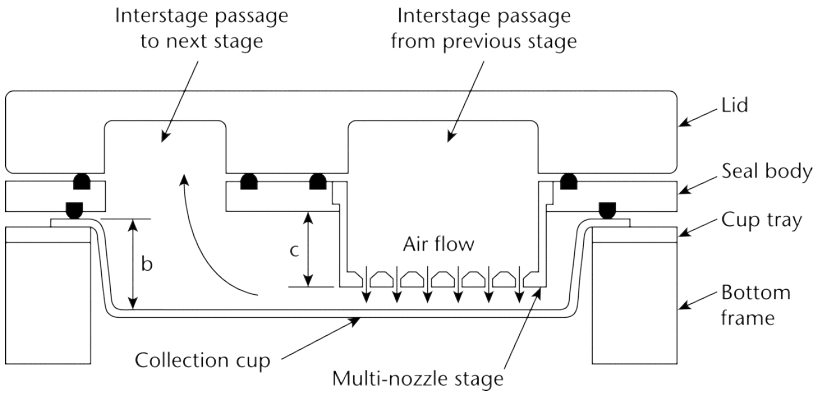

Fig. 9b. Layout of interstage passageways of *Apparatus 5*.

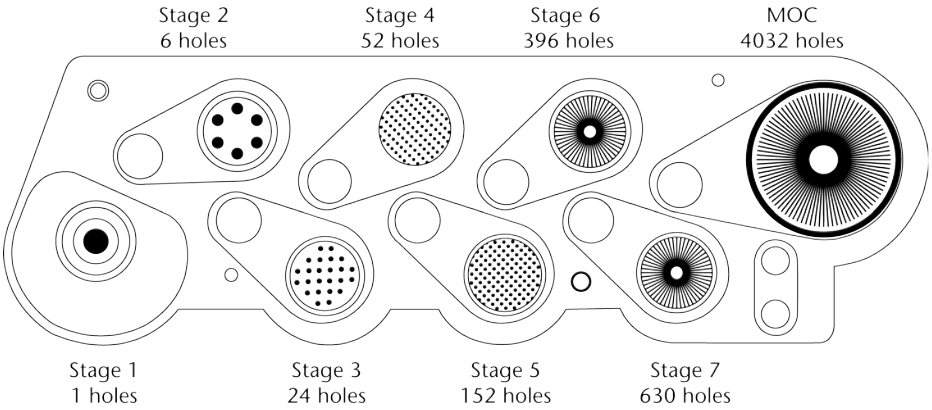

Fig. 9c. Nozzle configuration of *Apparatus 5*.

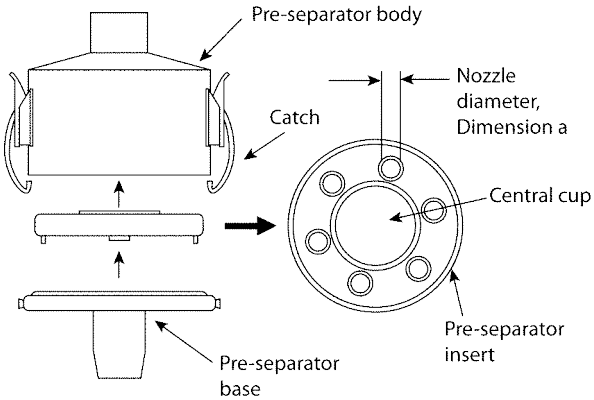

Fig. 9d. Pre-separator layout for *Apparatus 5*.

Apparatus 6 for Metered-Dose Inhalers—

Design—Apparatus 6 is identical to *Apparatus 5* (*Figures 9-9d*), except that the preseparator is not to be used. Use this apparatus at a flow rate of 30 L per minute (±5%), unless otherwise prescribed in the individual monograph.

Procedure—Assemble the apparatus without the preseparator. Place cups into the apertures in the cup tray. To ensure efficient particle capture, coat the particle collection surface of each stage with glycerol, silicone oil, or other suitable liquid typically deposited from a volatile solvent, unless it has been demonstrated to be unnecessary. Insert the cup tray into the bottom frame, and lower into place. Close the impactor lid with seal body attached, and operate the handle to lock the impactor together so that the system is airtight. Connect an induction port with internal dimensions as defined in *Figure 4a* to the impactor inlet. Use a mouthpiece adapter that ensures that the tip of the inhaler mouthpiece is flush with the open end of the induction port. Turn on the vacuum pump to draw air through the cascade impactor, and calibrate the airflow through the system with an appropriate flowmeter attached to the open end of the induction port. Adjust the flow-control valve on the vacuum pump to achieve steady flow through the system at the required rate, and ensure that the airflow through the system is within ±5% of this flow rate. Unless otherwise prescribed in the patient instructions, shake the inhaler for 5 seconds, and discharge one delivery to waste. With the vacuum pump

Accessed from 167.78.4.19 by James Cumbie (ocean22) on Mon Sep 09 15:04:23 EDT 2013

running, insert the mouthpiece into the mouthpiece adapter, and immediately fire the minimum recommended dose into the cascade impactor. Keep the valve depressed for a duration sufficient to ensure that the dose has been completely discharged. If additional sprays are required for the sample, shake the inhaler, reinsert it into the mouthpiece adapter, and immediately fire the next minimum recommended dose.

Repeat until the required number of doses have been discharged. The number of minimum recommended doses discharged must be sufficient to ensure an accurate and precise determination of *Aerodynamic Size Distribution*. [NOTE—The number of minimum recommended doses is typically not greater than 10.] After the last dose has been discharged, remove the inhaler from the mouthpiece adapter. Rinse the mouthpiece adapter and induction port with a suitable solvent, and dilute quantitatively to an appropriate volume.

Dismantle the apparatus, and recover the drug for analysis as follows: remove the induction port and mouthpiece adapter from the apparatus, and recover the deposited drug into an aliquot of solvent; open the impactor by releasing the handle and lifting the lid; remove the cup tray, with the collection cups; and extract the active ingredient in each cup into an aliquot of solvent. Using the method of analysis specified in the individual monograph, determine the quantity of active ingredient contained in each of the aliquots of solvent.

Determine the cutoff diameters of each of the individual stages of the impactor, at the value of Q employed in the test by using Eq. 2 with values obtained from *Table 7*. Thus, when Q = 30 L of air per minute, the cutoff diameter of Stage 2 is given by the formula:

$$D_{50,30LPM} = 4.46\ \mu m \times (60/30)^{0.52} = 6.40\ \mu m.$$

To analyze the data, proceed as directed under *Data Analysis*.

Data Analysis

This section describes the data analysis required to define the *Aerodynamic Size Distribution* of the drug output from the test inhaler, after the use of *Apparatus 1, 2, 3, 4, 5,* or *6*. Enter the data collected from *Apparatus 1, 2, 3, 4, 5,* or *6* in the table of mass summaries as shown in *Table 8*. Perform only those calculations specified in the individual monograph.

Table 8. Table of Mass Summaries for Analyses of Metered-Dose Inhalers and Dry Powder Inhalers

Mass	Apparatus 1		Apparatus 2		Apparatus 3[a]		Apparatus 4[b]		Apparatus 5[d]		Apparatus 6[d]	
Mouthpiece adapter	A_i	—	A_iA_i	—	A_i	—	A_i	—	A_i	—	A_i	—
Preseparator	—	—	—	—	A_P	—	—	—	A_P	—	—	—
Stage 0 of impactor	A_0	B_0	—	—	A_0	B_0	—	—	—	—	—	—
Stage 1 of impactor/impinger	A_1	B_1	A_1	—	A_1	B_1	A_1	—	A_1	B_1	A_1	B_1
Stage 2 of impactor/impinger	A_2	B_2	A_2	B_2	A_2	B_2	A_2	B_2	A_2	B_2	A_2	B_2
Stage 3 of impactor/impinger	A_3	B_3	A_3	B_3	A_3	B_3	A_3	B_3	A_3	B_3	A_3	B_3
Stage 4 of impactor/impinger	A_4	B_4	A_4	B_4	A_4	B_4	A_4	B_4	A_4	B_4	A_4	B_4
Stage 5 of impactor/impinger	A_5	B_5	A_5	B_5	A_5	B_5	—	—	A_5	B_5	A_5	B_5
Stage 6 of impactor/impinger	A_6	B_6	—	—	A_6	B_6	—	—	A_6	B_6	A_6	B_6
Stage 7 of impactor/impinger	A_7	B_7	—	—	A_7	B_7	—	—	A_7	B_7	A_7	B_7
Filter	A_F	B_F	A_F	B_F	A_F	B_F	A_F	B_F	A_F	B_F	A_F	B_F
Sums of Masses	ΣA[c]	ΣB[c]	ΣA[c]	ΣB[c]	ΣA[c]	ΣB[c]	ΣA[c]	ΣB[c]	ΣA[c]	ΣB[c]	ΣA[c]	ΣB[c]

[a]Stages 6 and 7 are omitted from *Apparatus 3* at airflow rates >60 L per minute.
[b]Stage 5 of *Apparatus 4* is the filter stage (see *Figure 8*).
[c]ΣA is the total drug mass recovered from the apparatus; ΣB is the mass of drug recovered from the impactor (*Apparatus 1*, *3*, *5* and *6*) or from the impactor stages beneath the uppermost stage (*Apparatus 2* and *4*).
[d]For *Apparatus 5* and *6*, values for the drug masses AF and BF refer to collections from the MOC, and/or the after-filter if used.

Copyright (c) 2013 The United States Pharmacopeial Convention. All rights reserved.

CALCULATIONS

Fine Particle Dose and Fine Particle Fraction—Calculate the total mass, ΣA, of drug delivered from the mouthpiece of the inhaler into the apparatus. Then calculate the total mass, R, of drug found on the stages of the apparatus and the filter that captured the drug in the fine particle size range appropriate for the particular drug being tested. The *Fine Particle Dose* is calculated by the formula:

$$R/n$$

where R is as stated above, and n is the number of doses discharged during the test. The *Fine Particle Fraction* that would be delivered from the inhaler is then calculated by the formula:

$$R/\Sigma A.$$

Cumulative Percentage (Cum%) of Drug Mass Less Than Stated Aerodynamic Diameter—Construct *Table 9* by dividing the mass of drug on the filter stage by ΣB (see *Table 8*). Multiply the quotient by 100, and enter this number as a percentage opposite the effective cutoff diameter of the stage immediately above it in the impactor or impinger stack. For *Apparatus 2* or *4,* use Equation 1 to calculate the stage cutoff diameters, $D_{50,Q}$, at the airflow rate, Q, employed during the test. For *Apparatus 5* and *6,* use Equation 2 with *Table 7*. For *Apparatus 1,* use the cutoff diameters quoted by the manufacturer. For *Apparatus 3,* present the data as cumulative percentages of mass on and below the stated stage, and avoid assigning values to stage cutoff diameters.

Repeat the calculation for each of the stages in the impactor or impinger stack, in reverse numerical order (largest to smallest stage number). For each stage, calculate the cumulative percentage of mass less than the stated aerodynamic diameter by adding the percentage of the mass on that stage to the total percentage from the stages below and entering the value opposite the effective cutoff diameter of the stage above it in the stack. Thus, the percentage of drug on the filter can be seen to have aerodynamic diameters less than the cutoff diameter of the stage above the filter, and the percentage on the filter plus the percentage on the stage above have diameters less than the cutoff diameter of the stage above that, and so on. Repeat the calculation for each of the remaining stages in reverse numerical order (see *Table 9*).

If necessary, and where appropriate, plot the percentage of mass less than the stated aerodynamic diameters, versus the aerodynamic diameter, $D_{50,Q}$, on log probability paper. Calculate the GSD by the equation:

$$GSD = \sqrt{\frac{\text{Size X}}{\text{Size Y}}}$$

Table 9. Cumulative Percentage (Cum%) of Mass Less than the Stated Aerodynamic Diameter

	Apparatus 1		Apparatus 2		Apparatus 3[a]		Apparatus 4[b]		Apparatus 5		Apparatus 6	
Mass	**Cum%[c]**	**D_{50}[d]**	**Cum%[c]**	**$D_{50,Q}$[d]**	**Cum%[c]**	**$D_{50,Q}$[e]**	**Cum%[c]**	**$D_{50,Q}$[d]**	**Cum%[c]**	**$D_{50,Q}$[d]**	**Cum%[c]**	**$D_{50,Q}$[d]**
Filter		0.4		0.625		0.4		1.7		0.34		0.34
Stage 7	b	0.7	—	—	b	0.7	—	—	b	0.55	b	0.55
Stage 6	c	1.1	—	—	c	1.1	—	—	c	0.94	c	0.94
Stage 5	d	2.1	b	1.25	d	2.1	—	—	d	1.66	d	1.66
Stage 4	e	3.3	c	2.5	e	3.3	b	3.1	e	2.82	e	2.82
Stage 3	f	4.7	d	5.0	f	4.7	c	6.8	f	4.46	f	4.46
Stage 2	g	5.8	100	10.0	g	5.8	100	13.0	g	8.06	g	8.06
Stage 1	h	9.0	—	—	h	9.0	—	—	—	——	—	—
Stage 0	100	—	—	—	100	—	—	—	100	—	100	—

[a]Stages 6 and 7 are omitted from *Apparatus 3* at flow rates >60 L per minute; thus, values for b and c should be omitted for *Apparatus 3*, where necessary.
[b]The filter stage in *Apparatus 4* is Stage 5 (see *Figure 8*).
[c] [(mass on stage / ΣB)×100] % + (total% of ΣB from stages below).
[d]The 50% cutoff diameter of the stage immediately above that indicated (e.g., for Stage 4, enter the cutoff diameter for Stage 3; for *Apparatus 2* or *4*, calculate as $D_{50,Q}$ from Eq. 1; for *Apparatus 5* or *6*, calculate as $D_{50,Q}$ from Eq. 2 using *Table 7*). Values entered in the Table are correct for *Apparatus 1, 2, 4, 5,* and *6* only when used at 28.3, 60.0, 60.0, 60.0, and 60.0 L per minute, respectively.
[e]The D_{50} values are only valid at a flow rate of 28.3 L per minute.

Accessed from 167.78.4.19 by James Cumbie (ocean22) on Mon Sep 09 15:04:23 EDT 2013

Use these data and/or plot to determine values for MMAD and GSD etc., as appropriate and when necessary (see *Figure 10*).

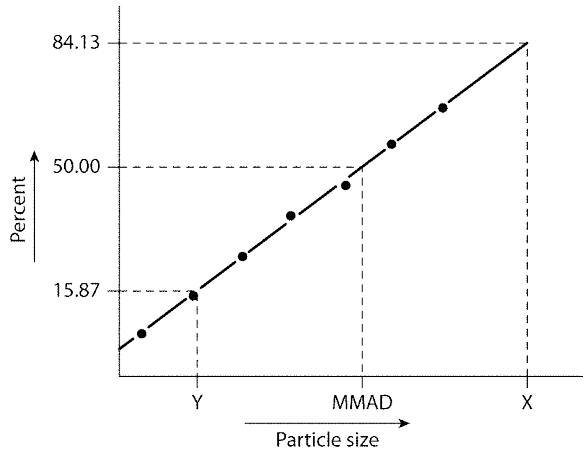

Fig. 10. Plot of cumulative percentage of mass less than stated aerodynamic diameter (probability scale) versus aerodynamic diameter (log scale).

⟨621⟩ CHROMATOGRAPHY

INTRODUCTION

Chromatographic separation techniques are multistage separation methods in which the components of a sample are distributed between two phases, of which one is stationary and the other mobile. The stationary phase may be a solid or a liquid supported on a solid or a gel. The stationary phase may be packed in a column, spread as a layer, distributed as a film, or applied by other techniques. The mobile phase may be gaseous or liquid or supercritical fluid. The separation may be based on adsorption, mass distribution (partition), or ion exchange; or it may be based on differences among the physicochemical properties of the molecules, such as size, mass, and volume. This chapter contains general procedures, definitions, and calculations of common parameters and describes general requirements for system suitability. The types of chromatography useful in qualitative and quantitative analysis employed in *USP* procedures are column, gas, paper, thin-layer (including high-performance thin-layer chromatography), and pressurized liquid chromatography (commonly called high-pressure or high-performance liquid chromatography).

GENERAL PROCEDURES

This section describes the basic procedures used when a chromatographic method is described in a monograph. The following procedures are followed unless otherwise indicated in the individual monograph.

Paper Chromatography

Stationary Phase: The stationary phase is a sheet of paper of suitable texture and thickness. Development may be ascending, in which the solvent is carried up the paper by capillary forces, or descending, in which the solvent flow is also assisted by gravitational force. The orientation of paper grain with respect to solvent flow is to be kept constant in a series of chromatograms. (The machine direction is usually designated by the manufacturer.)

Apparatus: The essential equipment for paper chromatography consists of a vapor-tight chamber with inlets for addition of solvent and a rack of corrosion-resistant material about 5 cm shorter than the inside height of the chamber. The rack serves as a support for solvent troughs and for antisiphon rods that, in turn, hold up the chromatographic sheets. The bottom of the chamber is covered with the prescribed solvent system or mobile phase. Saturation of the chamber with solvent vapor is facilitated by lining the inside walls with paper wetted with the prescribed solvent system.

Spotting: The substance or substances analyzed are dissolved in a suitable solvent. Convenient volumes, delivered from suitable micropipets, of the resulting solution, normally containing 1–20 µg of the compound, are placed in 6- to 10-mm spots not less than 3 cm apart.

Copyright (c) 2013 The United States Pharmacopeial Convention. All rights reserved.

Descending Paper Chromatography Procedure

(1) A spotted chromatographic sheet is suspended in the apparatus, using the antisiphon rod to hold the upper end of the sheet in the solvent trough. [NOTE—Ensure that the portion of the sheet hanging below the rods is freely suspended in the chamber without touching the rack, the chamber walls, or the fluid in the chamber.]
(2) The chamber is sealed to allow equilibration (saturation) of the chamber and the paper with the solvent vapor. Any excess pressure is released as necessary.
(3) After equilibration of the chamber, the prepared mobile phase is introduced into the trough through the inlet.
(4) The inlet is closed, and the mobile solvent phase is allowed to travel the desired distance down the paper.
(5) The sheet is removed from the chamber.
(6) The location of the solvent front is quickly marked, and the sheet is dried.
(7) The chromatogram is observed and measured directly or after suitable development to reveal the location of the spots of the isolated drug or drugs.

Ascending Paper Chromatography Procedure

(1) The mobile phase is added to the bottom of the chamber.
(2) The chamber is sealed to allow equilibration (saturation) of the chamber and the paper with the solvent vapor. Any excess pressure is released as necessary.
(3) The lower edge of the stationary phase is dipped into the mobile phase to permit the mobile phase to rise on the chromatographic sheet by capillary action.
(4) When the solvent front has reached the desired height, the chamber is opened, the sheet is removed, the location of the solvent front is quickly marked, and the sheet is dried.
(5) The chromatogram is observed and measured directly or after suitable development to reveal the location of the spots of the isolated drug or drugs.

Thin-Layer Chromatography

Stationary Phase: The stationary phase is a relatively thin, uniform layer of dry, finely powdered material applied to a glass, plastic, or metal sheet or plate (typically called the plate). The stationary phase of TLC plates has an average particle size of 10–15 µm, and that of high-performance TLC (HPTLC) plates has an average particle size of 5 µm. Commercial plates with a preadsorbent zone can be used if they are specified in a monograph. Sample applied to the preadsorbent region develops into sharp, narrow bands at the preadsorbent–sorbent interface. The separations achieved may be based on adsorption, partition, or a combination of both effects, depending on the particular type of stationary phase.

Apparatus: A chromatographic chamber made of inert, transparent material and having the following specifications is used: a flat-bottom or twin trough, a tightly fitted lid, and a size suitable for the plates. The chamber is lined on at least one wall with filter paper. Sufficient mobile phase or developing solvent is added to the chamber that, after impregnation of the filter paper, a depth appropriate to the dimensions of the plate used is available. The chromatographic chamber is closed and allowed to equilibrate. [NOTE—Unless otherwise indicated, the chromatographic separations are performed in a saturated chamber.]

Detection/Visualization: An ultraviolet (UV) light source suitable for observations under short- (254 nm) and long- (365 nm) wavelength UV light and a variety of other spray reagents used to make spots visible are often used.

Spotting: Solutions are spotted on the surface of the stationary phase (plate) at the prescribed volume in sufficiently small portions to obtain circular spots of 2–5 mm in diameter (1–2 mm on HPTLC plates) or bands of 10–20 mm × 1–2 mm (5–10 mm × 0.5–1 mm on HPTLC plates) at an appropriate distance from the lower edge of and sides of the plate. [NOTE—During development, the application position must be at least 5 mm (TLC) or 3 mm (HPTLC) above the level of the mobile phase.] The solutions are applied on a line parallel to the lower edge of the plate with an interval of at least 10 mm (5 mm on HPTLC plates) between the centers of spots, or 4 mm (2 mm on HPTLC plates) between the edges of bands, then allowed to dry.

Procedure

(1) Place the plate in the chamber, ensuring that the spots or bands are above the surface of the mobile phase.
(2) Close the chamber.
(3) Allow the mobile phase to ascend the plate until the solvent front has traveled three-quarters of the length of the plate, or the distance prescribed in the monograph.
(4) Remove the plate, mark the solvent front with a pencil, and allow to dry.
(5) Visualize the chromatograms as prescribed.
(6) Determine the chromatographic retardation factor (R_F) values for the principal spots or zones.
(7) Presumptive identification can be made by observation of spots or zones of identical R_F value and about equal magnitude obtained, respectively, with an unknown and a standard chromatographed on the same plate. A visual comparison of the size or intensity of the spots or zones may serve for semiquantitative estimation. Quantitative measurements are possible by means of densitometry (absorbence or fluorescence measurements).

Column Chromatography

Solid Support: Purified siliceous earth is used for normal-phase separation. Silanized chromatographic siliceous earth is used for reverse-phase partition chromatography.

Stationary Phase: The solid support is modified by the addition of a stationary phase specified in the individual monograph. If a mixture of liquids is used as the stationary phase, mix the liquids before the introduction of the solid support.

Accessed from 167.78.4.19 by James Cumbie (ocean22) on Mon Sep 09 15:04:23 EDT 2013

Mobile Phase: The mobile phase is specified in the individual monograph. If the stationary phase is an aqueous solution, equilibrate with water. If the stationary phase is a polar organic fluid, equilibrate with that fluid.

Apparatus: Unless otherwise specified in the individual monograph, the chromatographic tube is about 22 mm in inside diameter and 200–300 mm long. Attached to it is a delivery tube, without stopcock, about 4 mm in inside diameter and about 50 mm long.

APPARATUS PREPARATION: Pack a pledget of fine glass wool in the base of the tube. Combine the specified volume of stationary phase and the specified amount of solid support to produce a homogeneous, fluffy mixture. Transfer this mixture to the chromatographic tube, and tamp, using gentle pressure, to obtain a uniform mass. If the specified amount of solid support is more than 3 g, transfer the mixture to the column in portions of approximately 2 g, and tamp each portion. If the assay or test requires a multisegment column with a different stationary phase specified for each segment, tamp after the addition of each segment, and add each succeeding segment directly to the previous one. Pack a pledget of fine glass wool above the completed column packing. [NOTE—The mobile phase should flow through a properly packed column as a moderate stream or, if reverse-phase chromatography is applied, as a slow trickle.]

If a solution of the analyte is incorporated into the stationary phase, complete the quantitative transfer to the chromatographic tube by scrubbing the beaker used for the preparation of the test mixture with a mixture of about 1 g of *Solid Support* and several drops of the solvent used to prepare the sample solution before adding the final portion of glass wool.

Procedure

(1) Transfer the mobile phase to the column space above the column packing, and allow it to flow through the column under the influence of gravity.
(2) Rinse the tip of the chromatographic column with about 1 mL of mobile phase before each change in composition of mobile phase and after completion of the elution.
(3) If the analyte is introduced into the column as a solution in the mobile phase, allow it to pass completely into the column packing, then add mobile phase in several small portions, allowing each to drain completely, before adding the bulk of the mobile phase.
(4) Where the procedure indicates the use of multiple chromatographic columns mounted in series and the addition of mobile phase in divided portions is specified, allow each portion to drain completely through each column, and rinse the tip of each with mobile phase before the addition of each succeeding portion.

Gas Chromatography (GC)

Liquid Stationary Phase: This type of phase is available in packed or capillary columns.

Packed Column GC: The liquid stationary phase is deposited on a finely divided, inert solid support, such as diatomaceous earth, porous polymer, or graphitized carbon, which is packed into a column that is typically 2–4 mm in internal diameter and 1–3 m in length.

Capillary Column GC: In capillary columns, which contain no packed solid support, the liquid stationary phase is deposited on the inner surface of the column and may be chemically bonded to it.

Solid Stationary Phase: This type of phase is available only in packed columns. In these columns the solid phase is an active adsorbent, such as alumina, silica, or carbon, packed into a column. Polyaromatic porous resins, which are sometimes used in packed columns, are not coated with a liquid phase. [NOTE—Packed and capillary columns must be conditioned before use until the baseline and other characteristics are stable. The column or packing material supplier provides instructions for the recommended conditioning procedure.]

Apparatus: A gas chromatograph consists of a carrier gas source, injection port, column, detector, and recording device. The injection port, column, and detector are temperature controlled and may be varied as part of the analysis. The typical carrier gas is helium, nitrogen, or hydrogen, depending on the column and detector in use. The type of detector used depends on the nature of the compounds analyzed and is specified in the individual monograph. Detector output is recorded as a function of time, and the instrument response, measured as peak area or peak height, is a function of the amount present.

Temperature Program: The length and quality of a GC separation can be controlled by altering the temperature of the chromatographic column. When a temperature program is necessary, the individual monograph indicates the conditions in table format. The table indicates the initial temperature, rate of temperature change (ramp), final temperature, and hold time at the final temperature.

Procedure

(1) Equilibrate the column, injector, and detector with flowing carrier gas until a constant signal is received.
(2) Inject a sample through the injector septum, or use an autosampler.
(3) Begin the temperature program.
(4) Record the chromatogram.
(5) Analyze as indicated in the monograph.

Liquid Chromatography (LC)

The term *liquid chromatography*, as used in the compendia, is synonymous with high-pressure liquid chromatography and high-performance liquid chromatography. LC is a separation technique based on a solid stationary phase and a liquid mobile phase.

Copyright (c) 2013 The United States Pharmacopeial Convention. All rights reserved.

Stationary Phase: Separations are achieved by partition, adsorption, or ion-exchange processes, depending on the type of stationary phase used. The most commonly used stationary phases are modified silica or polymeric beads. The beads are modified by the addition of long-chain hydrocarbons. The specific type of packing needed to complete an analysis is indicated by the "L" designation in the individual monograph (see also the section *Chromatographic Columns*, below). The size of the beads is often described in the monograph as well. Changes in the packing type and size are covered in the *System Suitability* section of this chapter.

Chromatographic Column: The term *column* includes stainless steel, lined stainless steel, and polymeric columns, packed with a stationary phase. The length and inner diameter of the column affects the separation, and therefore typical column dimensions are included in the individual monograph. Changes to column dimensions are discussed in the *System Suitability* section of this chapter. Compendial monographs do not include the name of appropriate columns; this omission avoids the appearance of endorsement of a vendor's product and natural changes in the marketplace. See the section *Chromatographic Columns* for more information.

Mobile Phase: The mobile phase is a solvent or a mixture of solvents, as defined in the individual monograph.

Apparatus: A liquid chromatograph consists of a reservoir containing the mobile phase, a pump to force the mobile phase through the system at high pressure, an injector to introduce the sample into the mobile phase, a chromatographic column, a detector, and a data collection device.

Gradient Elution: The technique of continuously changing the solvent composition during the chromatographic run is called gradient elution or solvent programming. The gradient elution profile is presented in the individual monograph as a gradient table, which lists the time and proportional composition of the mobile phase at the stated time.

Procedure

(1) Equilibrate the column and detector with mobile phase at the specified flow rate until a constant signal is received.
(2) Inject a sample through the injector, or use an autosampler.
(3) Begin the gradient program.
(4) Record the chromatogram.
(5) Analyze as directed in the monograph.

CHROMATOGRAPHIC COLUMNS

A complete list of packings (L), phases (G), and supports (S) used in *USP–NF* tests and assays is located in *USP–NF* and *PF*, *Reagents, Indicators, and Solutions—Chromatographic Columns*. This list is intended to be a convenient reference for the chromatographer in identifying the pertinent chromatographic column specified in the individual monograph.

DEFINITIONS AND INTERPRETATION OF CHROMATOGRAMS

Chromatogram: A chromatogram is a graphical representation of the detector response, concentration of analyte in the effluent, or other quantity used as a measure of effluent concentration versus effluent volume or time. In planar chromatography, *chromatogram* may refer to the paper or layer with the separated zones.

Figure 1 represents a typical chromatographic separation of two substances, 1 and 2. t_{R1} and t_{R2} are the respective retention times; and h is the height, h/2 the half-height, and $W_{h/2}$ the width at half-height, for peak 1. W_1 and W_2 are the respective widths of peaks 1 and 2 at the baseline. Air peaks are a feature of gas chromatograms and correspond to the solvent front in LC. The retention time of these air peaks, or unretained components, is designated as t_M.

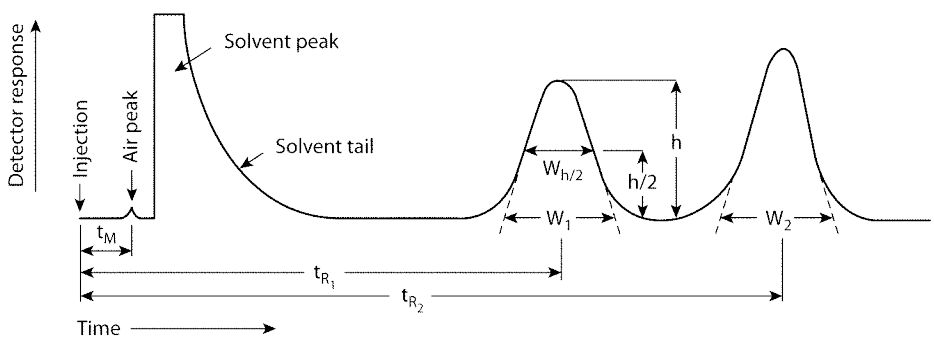

Figure 1. Chromatographic separation of two substances.

Dwell Volume (D): The dwell volume (also known as gradient delay volume) is the volume between the point at which the eluents meet and the top of the column.

Hold-Up Time (t_M): The hold-up time is the time required for elution of an unretained component (see *Figure 1*, shown as an air or unretained solvent peak, with the baseline scale in min).

Accessed from 167.78.4.19 by James Cumbie (ocean22) on Mon Sep 09 15:04:23 EDT 2013

Hold-Up Volume (V_M): The hold-up volume is the volume of mobile phase required for elution of an unretained component. It may be calculated from the hold-up time and the flow rate F, in mL/min:

$$V_M = t_M \times F$$

In size exclusion chromatography, the symbol V_O is used.

Number of Theoretical Plates (N)[1]: N is a measure of column efficiency. For Gaussian peaks, it is calculated by:

$$N = 16(t_R/W)^2$$

where t_R is the retention time of the substance, and W is the peak width at its base, obtained by extrapolating the relatively straight sides of the peak to the baseline. The value of N depends upon the substance being chromatographed as well as the operating conditions, such as the flow rate and temperature of the mobile phase or carrier gas, the quality of the packing, the uniformity of the packing within the column, and, for capillary columns, the thickness of the stationary phase film and the internal diameter and length of the column.

Where electronic integrators are used, it may be convenient to determine the number of theorical plates, by the equation:

$$N = 5.54\left(\frac{t_R}{W_{h/2}}\right)^2$$

where $W_{h/2}$ is the peak width at half-height. However, in the event of dispute, only equations based on peak width at baseline are to be used.

Peak: The peak is the portion of the chromatographic recording of the detector response when a single component is eluted from the column. If separation is incomplete, two or more components may be eluted as one unresolved peak.

Peak-to-Valley Ratio (p/v): The p/v may be employed as a system suitability criterion in a test for related substances when baseline separation between two peaks is not achieved. *Figure 2* represents a partial separation of two substances, where H_p is the height above the extrapolated baseline of the minor peak and H_v is the height above the extrapolated baseline at the lowest point of the curve separating the minor and major peaks:

$$p/v = H_p/H_v$$

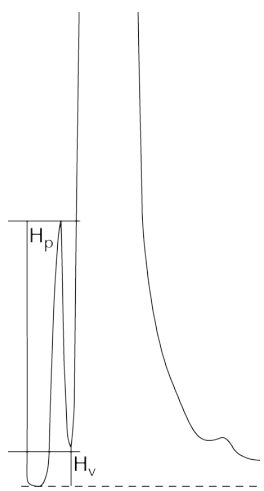

Figure 2. Peak-to-valley ratio determination.

[1]The parameters k, N, r, and r_G were developed for isothermal GC separations and isocratic HPLC separations. Because these terms are thermodynamic parameters, they are valid only for separations made at constant temperature, mobile phase composition, and flow rate. However, for separations made with a temperature program or solvent gradient, these parameters may be used simply as comparative means to ensure that adequate chromatographic conditions exist to perform the methods as intended in the monographs.

Copyright (c) 2013 The United States Pharmacopeial Convention. All rights reserved.

Relative Retardation (R_{ret}): The relative retardation is the ratio of the distance traveled by the analyte to the distance simultaneously traveled by a reference compound (see *Figure 3*) and is used in planar chromatography.

$$R_{ret} = b / c$$

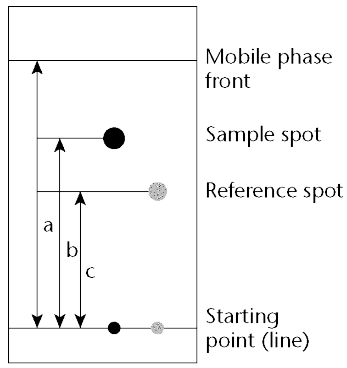

Figure 3. Typical planar chromatography.

Relative Retention (r)[1]: Is the ratio of the adjusted retention time of a component relative to that of another used as a reference obtained under identical conditions:

$$r = t_{R2} - t_M / t_{R1} - t_M$$

where t_{R2} is the retention time measured from the point of injection of the compound of interest; t_{R1} is the retention time measured from the point of injection of the compound used as reference; and t_M is the retention time of a nonretained marker defined in the procedure, all determined under identical experimental conditions on the same column.

Relative Retention Time (RRT): Also known as unadjusted relative retention. Comparisons in USP are normally made in terms of unadjusted relative retention, unless otherwise indicated.

$$RRT = t_{R2}/t_{R1}$$

The symbol r_G is also used to designate unadjusted relative retention values.

Relative Standard Deviation in Percentage

$$\%RSD = \frac{100}{\bar{x}}\left(\frac{\sum_{i=1}^{N}\left(x_i - \bar{x}\right)^2}{N-1}\right)^{1/2}$$

Retardation Factor (R_F): The retardation factor is the ratio of the distance traveled by the center of the spot to the distance simultaneously traveled by the mobile phase and is used in planar chromatography. Using the symbols in *Figure 3*:

$$R_F = b/a$$

Retention Factor (k)[1]: The retention factor is also known as the capacity factor (k′). Defined as:

$$k = \frac{\text{amount of substance in stationary phase}}{\text{amount of substance in mobile phase}}$$

or

$$k = \frac{\text{time spent by substance in stationary phase}}{\text{time spent by substance in mobile phase}}$$

The retention factor of a component may be determined from the chromatogram:

$$k = (t_R - t_M)/t_M$$

Retention Time (t_R): In liquid chromatography and gas chromatography, the retention time, t_R, is defined as the time elapsed between the injection of the sample and the appearance of the maximum peak response of the eluted sample zone. t_R may be used as a parameter for identification. Chromatographic retention times are characteristic of the compounds they represent but are not

Accessed from 167.78.4.19 by James Cumbie (ocean22) on Mon Sep 09 15:04:23 EDT 2013

unique. Coincidence of retention times of a sample and a reference substance can be used as a partial criterion in construction of an identity profile but may not be sufficient on its own to establish identity. Absolute retention times of a given compound may vary from one chromatogram to the next.

Retention Volume (V_R): The retention volume is the volume of mobile phase required for elution of a component. It may be calculated from the retention time and the flow rate in mL/min:

$$V_R = t_R \times F$$

Resolution (R_S): The resolution is the separation of two components in a mixture, calculated by:

$$R_S = 2(t_{R2} - t_{R1})/(W_1 + W_2)$$

where t_{R2} and t_{R1} are the retention times of the two components; and W_2 and W_1 are the corresponding widths at the bases of the peaks obtained by extrapolating the relatively straight sides of the peaks to the baseline.

Where electronic integrators are used, it may be convenient to determine the resolution, by the equation:

$$R_S = 1.18(t_{R2} - t_{R1})/(W_{1,h/2} + W_{2,h/2})$$

Separation Factor (α): The separation factor is the relative retention calculated for two adjacent peaks (by convention, the value of the separation factor is always >1):

$$\alpha = k_2/k_1$$

Symmetry Factor (A_S)[2]: The symmetry factor (also known as the tailing factor) of a peak (see *Figure 4*) is calculated by:

$$A_S = W_{0.05}/2f$$

where $W_{0.05}$ is the width of the peak at 5% height and f is the distance from the peak maximum to the leading edge of the peak, the distance being measured at a point 5% of the peak height from the baseline.

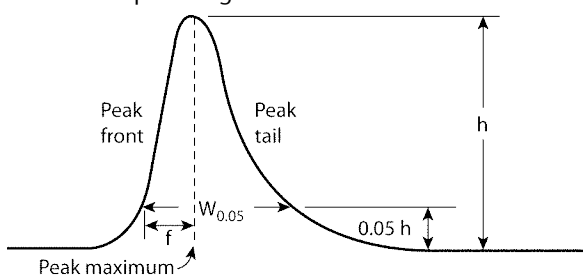

Figure 4. Asymmetrical chromatographic peak.

Tailing Factor (T): See *Symmetry Factor*.

SYSTEM SUITABILITY

System suitability tests are an integral part of gas and liquid chromatographic methods. These tests are used to verify that the chromatographic system is adequate for the intended analysis.

The tests are based on the concept that the equipment, electronics, analytical operations, and samples analyzed constitute an integral system that can be evaluated as such.

Factors that may affect chromatographic behavior include the following:

- Composition, ionic strength, temperature, and apparent pH of the mobile phase
- Flow rate, column dimensions, column temperature, and pressure
- Stationary phase characteristics, including type of chromatographic support (particle-based or monolithic), particle or macropore size, porosity, and specific surface area
- Reverse-phase and other surface modification of the stationary phases, the extent of chemical modification (as expressed by end-capping, carbon loading, etc.)

The resolution, R_S, is a function of the number of theoretical plates, N (also referred to as efficiency), the separation factor, α, and the capacity factor, k. [NOTE—All terms and symbols are defined in the preceding section *Definitions and Interpretation of Chromatograms*.] For a given stationary phase and mobile phase, N may be specified to ensure that closely eluting compounds are resolved from each other, to establish the general resolving power of the system, and to ensure that internal standards are resolved from the

[2] It is also a common practice to measure the Asymmetry Factor as the ratio of the distance between the vertical line connecting the peak apex with the interpolated baseline and the peak front, and the distance between that line and the peak back measured at 10% of the peak height (see *Figure 4*), would be $(W_{0.10} - f_{0.10})/f_{0.10}$. However, for the purposes of USP, only the formula (As) as presented here is valid.

Copyright (c) 2013 The United States Pharmacopeial Convention. All rights reserved.

drug. This is a less reliable means to ensure resolution than is direct measurement. Column efficiency is, in part, a reflection of peak sharpness, which is important for the detection of trace components.

Replicate injections of a standard preparation or other standard solutions are compared to ascertain whether requirements for precision are met. Unless otherwise specified in the individual monograph, data from five replicate injections of the analyte are used to calculate the relative standard deviation, %RSD, if the requirement is 2.0% or less; data from six replicate injections are used if the relative standard deviation requirement is more than 2.0%.

For the *Assay* in a drug substance monograph, where the value is 100% for the pure substance, and no maximum relative standard deviation is stated, the maximum permitted %RSD is calculated for a series of injections of the reference solution:

$$\%RSD = KB\sqrt{n}/t_{90\%,\ n-1}$$

where K is a constant (0.349), obtained from the expression $K = (0.6/\sqrt{2}) \times (t_{90\%}, 5/\sqrt{6})$, in which $0.6/\sqrt{2}$ represents the required percentage relative standard deviation after six injections for B = 1.0; B is the upper limit given in the definition of the individual monograph minus 100%; n is the number of replicate injections of the reference solution ($3 \le n \le 6$); and $t_{90\%,\ n-1}$ is the Student's t at the 90% probability level (double sided) with n − 1 degrees of freedom.

Unless otherwise prescribed, the maximum permitted relative standard deviation does not exceed the appropriate value given in the table of repeatability requirements. This requirement does not apply to tests for related substances.

Relative Standard Deviation Requirements

	Number of Individual Injections			
	3	4	5	6
B (%)	**Maximum Permitted RSD**			
2.0	0.41	0.59	0.73	0.85
2.5	0.52	0.74	0.92	1.06
3.0	0.62	0.89	1.10	1.27

The symmetry factor, A_S, a measure of peak symmetry, is unity for perfectly symmetrical peaks; and its value increases as tailing becomes more pronounced (see *Figure 4*). In some cases, values less than unity may be observed. As peak symmetry moves away from values of 1, integration, and hence precision, become less reliable.

The signal-to-noise ratio (S/N) is a useful system suitability parameter. The S/N is calculated as follows:

$$S/N = 2H/h$$

where H is the height of the peak measured from the peak apex to a baseline extrapolated over a distance ≥5 times the peak width at its half-height; and h is the difference between the largest and smallest noise values observed over a distance ≥5 times the width at the half-height of the peak and, if possible, situated equally around the peak of interest (see *Figure 5*).

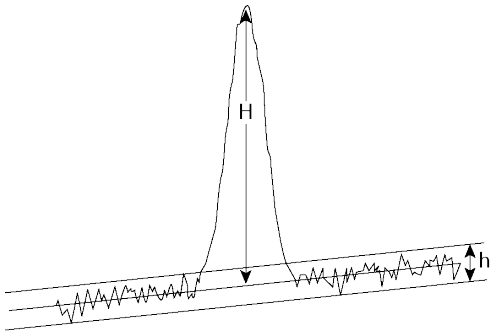

Figure 5. Noise and chromatographic peak, components of the S/N ratio.

These system suitability tests are performed by collecting data from replicate injections of standard or other solutions as specified in the individual monograph.

The specification of definitive parameters in a monograph does not preclude the use of other suitable operating conditions. Adjustments are permitted only when

- Suitable standards (including Reference Standards) are available for all compounds used in the suitability test; and
- Those standards show that the adjustments improved the quality of the chromatography with respect to the system suitability requirements.

Adjustments to chromatographic systems performed in order to comply with system suitability requirements are not to be made in order to compensate for column failure or system malfunction.

If adjustments of operating conditions are necessary in order to meet system suitability requirements, each of the items in the following list is the maximum variation that can be considered, unless otherwise directed in the monograph; these changes may require additional validation data. To verify the suitability of the method under the new conditions, assess the relevant analytical performance characteristics potentially affected by the change. Multiple adjustments can have a cumulative effect on the performance of the system and are to be considered carefully before implementation. Adjustments to the composition of the mobile phase

Accessed from 167.78.4.19 by James Cumbie (ocean22) on Mon Sep 09 15:04:23 EDT 2013

in gradient elution are not recommended. If adjustments are necessary, only column changes (same packing material) or dwell volume adjustments are recommended.

pH of Mobile Phase (HPLC): The pH of the aqueous buffer used in the preparation of the mobile phase can be adjusted to within ±0.2 units of the value or range specified.

Concentration of Salts in Buffer (HPLC): The concentration of the salts used in the preparation of the aqueous buffer employed in the mobile phase can be adjusted to within ±10% if the permitted pH variation (see above) is met.

Ratio of Components in Mobile Phase (HPLC): The following adjustment limits apply to minor components of the mobile phase (specified at 50% or less). The amounts of these components can be adjusted by ±30% relative. However, the change in any component cannot exceed ±10% absolute (i.e., in relation to the total mobile phase). Adjustment can be made to one minor component in a ternary mixture. Examples of adjustments for binary and ternary mixtures are given below.

Binary Mixtures

SPECIFIED RATIO OF 50:50: 30% of 50 is 15% absolute, but this exceeds the maximum permitted change of ±10% absolute in either component. Therefore, the mobile phase ratio may be adjusted only within the range of 40:60 to 60:40.

SPECIFIED RATIO OF 2:98: 30% of 2 is 0.6% absolute. Therefore the maximum allowed adjustment is within the range of 1.4:98.6 to 2.6:97.4.

Ternary Mixtures

SPECIFIED RATIO OF 60:35:5: For the second component, 30% of 35 is 10.5% absolute, which exceeds the maximum permitted change of ±10% absolute in any component. Therefore the second component may be adjusted only within the range of 25% to 45% absolute. For the third component, 30% of 5 is 1.5% absolute. In all cases, a sufficient quantity of the first component is used to give a total of 100%. Therefore, mixture ranges of 50:45:5 to 70:25:5 or 58.5:35:6.5 to 61.5:35:3.5 would meet the requirement.

Wavelength of UV-Visible Detector (HPLC): Deviations from the wavelengths specified in the procedure are not permitted. The procedure specified by the detector manufacturer, or another validated procedure, is used to verify that error in the detector wavelength is, at most, ±3 nm.

Stationary Phase

COLUMN LENGTH (GC, HPLC): Can be adjusted by as much as ±70%.

COLUMN INNER DIAMETER (HPLC): Can be adjusted if the linear velocity is kept constant. See *Flow Rate (HPLC)* below.

COLUMN INNER DIAMETER (GC)—Can be adjusted by as much as ±50% for GC.

FILM THICKNESS (CAPILLARY CG)—Can be adjusted by as much as –50% to 100%.

Particle Size (HPLC): The particle size can be reduced by as much as 50%, but cannot be increased.

Particle Size (GC): Changing from a larger to a smaller or from a smaller to a larger particle size GC mesh support is acceptable if the chromatography meets the requirements of system suitability and the same particle size range ratio is maintained. The particle size range ratio is defined as the diameter of the largest particle divided by the diameter of the smallest particle.

Flow Rate (GC): The flow rate can be adjusted by as much as ±50%.

Flow Rate (HPLC): When column dimensions have been modified, the flow rate can be adjusted using:

$$F_2 = F_1 \frac{l_2 d_2^2}{l_1 d_1^2}$$

in which F_1 is the flow rate indicated in the monograph, in mL/min; F_2 is the adjusted flow rate, in mL/min; l_1 is the length of the column indicated in the monograph; l_2 is the length of the column used; d_1 is the column inner diameter indicated in the monograph; and d_2 is the internal diameter of the column used. Additionally, the flow rate can be adjusted by ±50%.

Injection Volume (HPLC): The injection volume can be reduced as far as is consistent with accepted precision and detection limits; no increase is permitted.

Injection Volume and Split Volume (GC): The injection volume and split volume may be adjusted if detection and repeatability are satisfactory.

Column Temperature (HPLC): The column temperature can be adjusted by as much as ±10°. Column thermostating is recommended to improve control and reproducibility of retention time.

Oven Temperature (GC): The oven temperature can be adjusted by as much as ±10%.

Oven Temperature Program (GC): Adjustment of temperatures is permitted as stated above. When the specified temperature must be maintained or when the temperature must be changed from one value to another, an adjustment of up to ±20% is permitted.

Unless otherwise directed in the monograph, system suitability parameters are determined from the analyte peak.

Measured values of R_r or R_F or t_R for the sample substance do not deviate from the values obtained for the reference compound and mixture by more than the statistically determined reliability estimates from replicate assays of the reference compound. Relative retention times may be provided in monographs for informational purposes only to aid in peak identification. There are no acceptance criteria applied to relative retention times.

Copyright (c) 2013 The United States Pharmacopeial Convention. All rights reserved.

Suitability testing is used to ascertain the effectiveness of the final operating system, which should be subjected to this testing. Make injections of the appropriate preparation(s) as required in order to demonstrate adequate system suitability (as described in the *Chromatographic system* section of the method in a monograph) throughout the run.

The preparation can be a standard preparation or a solution containing a known amount of analyte and any additional materials (e.g., excipients or impurities) useful in controlling the analytical system. Whenever there is a significant change in the chromatographic system (equipment, mobile phase component, or other components) or in a critical reagent, system suitability is to be reestablished. No sample analysis is acceptable unless the suitability of the system has been demonstrated.

QUANTITATION

During quantitation, disregard peaks caused by solvents and reagents or arising from the mobile phase or the sample matrix.

In the linear range, peak areas and peak heights are usually proportional to the quantity of compound eluting. The peak areas and peak heights are commonly measured by electronic integrators but may be determined by more classical approaches. Peak areas are generally used but may be less accurate if peak interference occurs. The components measured are separated from any interfering components. Peak tailing and fronting is minimized, and the measurement of peaks on tails of other peaks are avoided when possible.

Although comparison of impurity peaks with those in the chromatogram of a standard at a similar concentration is preferred, impurity tests may be based on the measurement of the peak response due to impurities and expressed as a percentage of the area of the drug peak. The standard may be the drug itself at a level corresponding to, for example, 0.5% impurity, assuming similar peak responses. When impurities must be determined with greater certainty, use a standard of the impurity itself or apply a correction factor based on the response of the impurity relative to that of the main component.

External Standard Method: The concentration of the component(s) quantified is determined by comparing the response(s) obtained with the sample solution to the response(s) obtained with a standard solution.

Internal Standard Method: Equal amounts of the internal standard are introduced into the sample solution and a standard solution. The internal standard is chosen so that it does not react with the test material, is stable, is resolved from the component(s) quantified (analytes), and does not contain impurities with the same retention time as that of the analytes. The concentrations of the analytes are determined by comparing the ratios of their peak areas or peak heights and the internal standard in the sample solution with the ratios of their peak areas or peak heights and the internal standard in the standard solution.

Normalization Procedure: The percentage content of a component of the test material is calculated by determining the area of the corresponding peak as a percentage of the total area of all the peaks, excluding those due to solvents or reagents or arising from the mobile phase or the sample matrix and those at or below the limit at which they can be disregarded.

Calibration Procedure: The relationship between the measured or evaluated signal y and the quantity (e.g., concentration, mass) of substance x is determined, and the calibration function is calculated. The analytical results are calculated from the measured signal or evaluated signal of the analyte and its position on the calibration curve.

In tests for impurities for both the *External Standard Method,* when a dilution of the sample solution is used for comparison, and the *Normalization Procedure,* any correction factors indicated in the monograph are applied (e.g., when the response factor is outside the range 0.8–1.2).

When the impurity test prescribes the total of impurities or there is a quantitative determination of an impurity, choice of an appropriate threshold setting and appropriate conditions for the integration of the peak areas is important. In such tests the limit at or below which a peak is disregarded is generally 0.05%. Thus, the threshold setting of the data collection system corresponds to at least half of this limit. Integrate the peak area of any impurity that is not completely separated from the principal peak, preferably by valley-to-valley extrapolation (tangential skim).

⟨660⟩ CONTAINERS—GLASS

DESCRIPTION

Glass containers for pharmaceutical use are intended to come into direct contact with pharmaceutical products. Glass used for pharmaceutical containers is either borosilicate (neutral) glass or soda-lime-silica glass. Borosilicate glass contains significant amounts of boric oxide, aluminum oxide, and alkali and/or alkaline earth oxides. Borosilicate glass has a high hydrolytic resistance and a high thermal shock resistance due to the chemical composition of the glass itself; it is classified as Type I glass. Soda-lime-silica glass is a silica glass containing alkaline metal oxides, mainly sodium oxide; and alkaline earth oxides, mainly calcium oxide. Soda-lime-silica glass has a moderate hydrolytic resistance due to the chemical composition of the glass itself; it is classified as Type III glass. Suitable treatment of the inner surface of Type III soda-lime-silica glass containers will raise the hydrolytic resistance from a moderate to a high level, changing the classification of the glass to Type II.

The following recommendations can be made as to the suitability of the glass type for containers for pharmaceutical products, based on the tests for hydrolytic resistance. Type I glass containers are suitable for most products for parenteral and nonparenteral use. Type II glass containers are suitable for most acidic and neutral aqueous products for parenteral and non-parenteral uses. Type II

Accessed from 167.78.4.19 by James Cumbie (ocean22) on Mon Sep 09 15:04:23 EDT 2013

glass containers may be used for alkaline parenteral products where stability data demonstrate their suitability. Type III glass containers usually are not used for parenteral products or for powders for parenteral use, except where suitable stability test data indicate that Type III glass is satisfactory.

The inner surface of glass containers may be treated to improve hydrolytic resistance. The outer surface of glass containers may be treated to reduce friction or for protection against abrasion or breakage. The outer surface treatment is such that it does not contaminate the inner surface of the container.

Glass may be colored to provide protection from light by the addition of small amounts of metal oxides and is tested as described in *Spectral Transmission for Colored Glass Containers*. A clear and colorless container that is made light resistant by means of an opaque enclosure (see *Light-Resistant Container* in ⟨659⟩ *Packaging and Storage Requirements*) is exempt from the requirements for spectral transmission. Containers for aqueous parenteral products are tested for arsenic release.

SPECIFIC TESTS

The *Glass Grains Test* combined with the *Surface Glass Test* for hydrolytic resistance determines the glass type. The hydrolytic resistance is determined by the quantity of alkali released from the glass under the conditions specified. This quantity of alkali is extremely small in the case of the more resistant glasses, thus calling for particular attention to all details of the tests and the use of apparatus of high quality and precision. The tests should be conducted in an area relatively free from fumes and excessive dust. Test selection is shown in *Table 1* and *Table 2*.

Table 1. Determination of Glass Types

Container Type	Test	Reason
I, II, III	*Glass Grains Test*	Distinguishes Type I borosilicate glass from Type II and III soda-lime-silica glass

The inner surface of glass containers is the contact surface for pharmaceutical preparations, and the quality of this surface is determined by the *Surface Glass Test* for hydrolytic resistance. The *Surface Etching Test* may be used to determine whether high hydrolytic resistance is due to chemical composition or to surface treatement. Alternatively, the comparison of data from the *Glass Grains Test* and the *Surface Glass Test* may be used in *Table 2*.

Table 2. Determination of Inner Surface Hydrolytic Resistance

Container Type	Test	Reason
I, II, III	*Surface Glass Test*	Determines hydrolytic resistance of inner surface. Distinguishes between *Type I* and *Type II* containers with high hydrolytic resistance and *Type III* containers with moderate hydrolytic resistance
I, II	*Surface Etching Test* or comparison of *Glass Grains Test* and *Surface Glass Test* data	Where it is necessary to determine whether high hydrolytic resistance is due to inner surface treatment or to the chemical composition of the glass containers

Glass containers must comply with their respective specifications for identity and surface hydrolytic resistance to be classified as Type I, II, or III glass. Type I or Type II containers for aqueous parenteral products are tested for extractable arsenic.

Hydrolytic Resistance

Apparatus

Autoclave—For these tests, use an autoclave capable of maintaining a temperature of 121 ± 1°, equipped with a thermometer, a pressure gauge, a vent cock, and a tray of sufficient capacity to accommodate the number of containers needed to carry out the test above the water level. Clean the autoclave and other apparatus thoroughly with Purified Water before use.

Copyright (c) 2013 The United States Pharmacopeial Convention. All rights reserved.

Mortar and Pestle—Use a hardened-steel mortar and pestle, made according to the specifications in *Figure 1*.

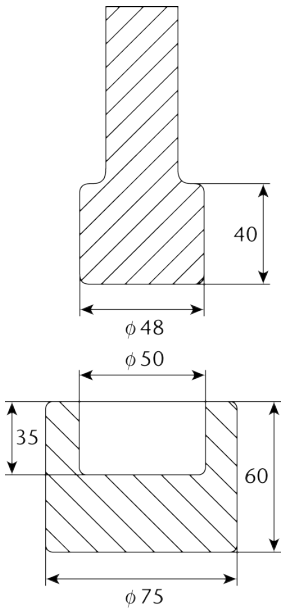

Figure 1. Mortar and pestle for pulverizing glass.

Other Apparatus—Also required are a set of three square-mesh stainless steel sieves mounted on frames consisting of US Sieve Nos. 25, 40, and 50 (see *Particle Size Distribution Estimation by Analytical Sieving* ⟨786⟩*, Table 1. Sizes of Standard Sieve Series in Range of Interest*); a tempered, magnetic steel hammer; a permanent magnet; weighing bottles; stoppers; metal foil (e.g. aluminum, stainless steel); a hot air oven, capable of maintaining 140 ± 5°; a balance, capable of weighing up to 500 g with an accuracy of 0.005 g; a desiccator; and an ultrasonic bath.

Reagents

Carbon Dioxide-Free Water—This is Purified Water that has been boiled vigorously for 5 minutes or more and allowed to cool while protected from absorption of carbon dioxide from the atmosphere, or Purified Water that has a resistivity of not less than 18 Mohm-cm.

Methyl Red Solution—Dissolve 50 mg of methyl red in 1.86 mL of 0.1 M sodium hydroxide and 50 mL of ethanol (96%), and dilute with Purified Water to 100 mL. To test for sensitivity, add 100 mL of carbon dioxide-free water and 0.05 mL of 0.02 M hydrochloric acid to 0.1 mL of the methyl red solution. The resulting solution should be red. Not more than 0.1 mL of 0.02 M sodium hydroxide is required to change the color to yellow. A color change from red to yellow corresponds to a change in pH from pH 4.4 (red) to pH 6.0 (yellow).

GLASS GRAINS TEST

The *Glass Grains Test* may be performed either on the canes used for the manufacture of tubing glass containers or on the containers.

Sample Preparation: Rinse the containers to be tested with Purified Water, and dry in the oven. Wrap at least three of the glass articles in clean paper, and crush to produce two samples of about 100 g each in pieces not more than 30 mm across. Place in the mortar 30–40 g of the pieces between 10 and 30 mm across taken from one of the samples, insert the pestle, and strike it heavily with the hammer once only. Alternatively, transfer samples into a ball mill-breaker, add the balls, and crush the glass. Transfer the contents of the mortar or ball mill to the coarsest sieve (No. 25) of the set. Repeat the operation until all fragments have been transferred to the sieve. Shake the set of sieves for a short time by hand, and remove the glass that remains on sieves No. 25 and No. 40. Submit these portions to further fracture, repeating the operation until about 10 g of glass remains on sieve No. 25. Reject this portion and the portion that passes through sieve No. 50. Reassemble the set of sieves, and shake for 5 minutes. Transfer to a weighing bottle the glass grains that passed through sieve No. 40 and are retained on sieve No. 50. Repeat the crushing and sieving procedure with the second glass sample until two samples of grains are obtained, each of which weigh more than 10 g.

Spread each sample on a piece of clean glazed paper, and remove any iron particles by passing the magnet over them. Transfer each sample into a beaker for cleaning. Add 30 mL of acetone to the grains in each beaker, and scour the grains, using suitable means such as a rubber-tipped or plastic-coated glass rod. After scouring the grains, allow to settle, and decant as much acetone as possible. Add another 30 mL of acetone, swirl, decant, and add a new portion of acetone. Fill the bath of the ultrasonic vessel with water at room temperature, then place the beaker in the rack, and immerse it until the level of the acetone is at the level of the water; apply the ultrasound for 1 minute. Swirl the beaker, allow to settle, and decant the acetone as completely as possible; then repeat the ultrasonic cleaning operation. If a fine turbidity persists, repeat the ultrasonic cleaning and acetone washing until the solution remains clear. Swirl, and decant the acetone. Dry the grains, first by putting the beaker on a warm plate and then by

Accessed from 167.78.4.19 by James Cumbie (ocean22) on Mon Sep 09 15:04:23 EDT 2013

heating at 140° for 20 minutes in a drying oven. Transfer the dried grains from each beaker into separate weighing bottles, insert the stoppers, and cool in a desiccator.

Method

Filling and Heating—Weigh 10.00 g of the cleaned and dried grains into two separate conical flasks. Pipet 50 mL of carbon dioxide-free Purified Water into each of the conical flasks (test solutions). Pipet 50 mL of carbon dioxide-free Purified Water into a third conical flask that will serve as a blank. Distribute the grains evenly over the flat bases of the flasks by shaking gently. Close the flasks with neutral glass dishes or aluminum foil rinsed with Purified Water or with inverted beakers so that the inner surfaces of the beakers fit snugly down onto the top rims of the flasks. Place all three flasks in the autoclave containing the water at ambient temperature, and ensure that they are held above the level of the water in the vessel. Carry out the following operations:

1. Heat the autoclave to 100°, and allow the steam to issue from the vent cock for 10 minutes.
2. Close the vent cock, and raise the temperature from 100° to 121° at a rate of 1° per minute.
3. Maintain the temperature at 121 ± 1° for 30 ± 1 minutes.
4. Lower the temperature from 121° to 100° at a rate of 0.5° per minute, venting to prevent a vacuum.
5. Do not open the autoclave before it has cooled to 95°. Remove the containers from the autoclave, using normal precautions, and cool the flasks in running tap water.

Titration—To each of the 3 flasks add 0.05 mL of *Methyl Red Solution*. Titrate the blank solution immediately with 0.02 M hydrochloric acid, then titrate the test solutions until the color matches that obtained with the blank solution. Subtract the titration volume for the blank solution from that for the test solutions. Calculate the mean value of the results in mL of 0.02 M hydrochloric acid per gram of the sample. Repeat the test if the highest and lowest observed values differ by more than 20%.

NOTE—Where necessary to obtain a sharp endpoint, decant the clear solution into a separate 250-mL flask. Rinse the grains by swirling with three 15-mL portions of Purified Water, and add the washings to the main solution. Add 0.05 mL of the *Methyl Red Solution*. Titrate, and calculate as before. In this case also add 45 mL of Purified Water and 0.05 mL of *Methyl Red Solution* to the blank solution.

Limits: The volume does not exceed the values indicated in *Table 3*.

Table 3. Test Limits for Glass Grains Test

	Maximum Volume of 0.02 M HCl per g of Test Glass (mL)	
Filling Volume (mL)	Type I	Types II and III
All	0.1	0.85

SURFACE GLASS TEST

Determination of the Filling Volume: The filling volume is the volume of Purified Water to be added to the container for the purpose of the test. For vials, bottles, cartridges, and syringes, the filling volume is 90% of the brimful capacity. For ampuls, it is the volume up to the height of the shoulder.

Vials and Bottles—Select six dry vials or bottles from the sample lot, or three if their capacity exceeds 100 mL, and remove any dirt or debris. Weigh the empty containers with an accuracy of 0.1 g. Place the containers on a horizontal surface, and fill them with Purified Water to about the rim edge, avoiding overflow and the introduction of air bubbles. Adjust the liquid levels to the brimful line. Weigh the filled containers to obtain the mass of the water expressed to 2 decimal places, for containers having a nominal volume less than or equal to 30 mL; and expressed to 1 decimal place, for containers having a nominal volume greater than 30 mL. Calculate the mean value of the brimful capacity in mL, and multiply it by 0.9. This volume, expressed to 1 decimal place, is the filling volume for the particular container lot.

Cartridges and Syringes—Select six dry syringes or cartridges, and seal the small opening (mouth of cartridges; Luer cone or staked needle of syringes), using an inert material. Determine the mean brimful capacity and filling volume according to *Vials and Bottles*.

Ampuls—Place at least six dry ampuls on a flat, horizontal surface, and fill them with Purified Water from a buret until the water reaches point A, where the body of the ampul starts to decrease to the shoulder of the ampul (see *Figure 2*). Read the capacities, expressed to 2 decimal places, and calculate the mean value. This volume, expressed to 1 decimal place, is the filling volume for the particular ampul lot. The filling volume may also be determined by weighing.

Copyright (c) 2013 The United States Pharmacopeial Convention. All rights reserved.

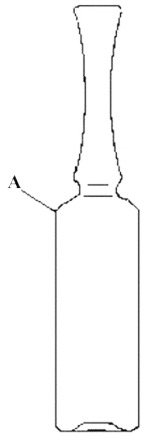

Figure 2. Filling volumes of ampuls up to point A.

Test: The determination is carried out on unused containers. The volumes of the test liquid necessary for the final determination are shown in *Table 4*.

Table 4. Volume of Test Liquid and Number of Titrations

Filling Volume (mL)	Volume of Test Liquid for One Titration (mL)	Number of Titrations
Up to 3	25.0	1
Above 3 and up to 30	50.0	2
Above 30 and up to 100	100.0	2
Above 100	100.0	3

Method

Cleaning—Remove any debris or dust. Shortly before the test, rinse each container carefully at least twice with Purified Water, and allow to stand. Immediately before testing, empty the containers; rinse once with Purified Water, then with carbon dioxide-free water; and allow to drain. Complete the cleaning procedure from the first rinsing in not less than 20 minutes and not more than 25 minutes. Heat closed ampuls in a water bath or in an air oven at about 50° for approximately 2 minutes before opening. Do not rinse before testing.

Filling and Heating—The containers are filled with carbon dioxide-free water up to the filling volume. Containers in the form of cartridges or prefillable syringes are closed in a suitable manner with material that does not interfere with the test. Each container, including ampuls, shall be loosely capped with an inert material such as a dish of neutral glass or aluminum foil previously rinsed with Purified Water. Place the containers on the tray of the autoclave. Place the tray in an autoclave containing a quantity of water such that the tray remains clear of the water. Close the autoclave, and carry out the autoclaving procedure as described for the *Glass Grains Test*, except that the temperature is maintained at 121 ± 1° for 60 ± 1 minutes. Remove the containers from the autoclave using normal precautions, place them in a water bath at 80°, and run cold tap water into the water bath. To avoid contamination of the extraction solution, take care that the water does not contact the loose foil caps. The cooling time does not exceed 30 minutes. The extraction solutions are analyzed by titration according to the method described below.

Titration—Carry out the titration within 1 hour of removal of the containers from the autoclave. Combine the liquids obtained from the containers, and mix. Introduce the prescribed volume (see *Table 4*) into a conical flask. Transfer the same volume of carbon dioxide-free water, to be used as a blank, into a second similar flask. Add to each flask 0.05 mL of *Methyl Red Solution* for each 25 mL of liquid. Titrate the blank with 0.01 M hydrochloric acid. Titrate the test liquid with the same acid until the color of the resulting solution is the same as that obtained for the blank. Subtract the value found for the blank titration from that found for the test liquid, and express the results in mL of 0.01 M hydrochloric acid per 100 mL of test liquid. Express titration values of less than 1.0 mL to two decimal places; express titration values of more than or equal to 1.0 mL to one decimal place.

Limits: The results, or the average of the results if more than one titration is performed, are not greater than the values stated in *Table 5*.

Accessed from 167.78.4.19 by James Cumbie (ocean22) on Mon Sep 09 15:04:23 EDT 2013

Table 5. Limit Values for the Surface Glass Test

	Maximum Volume of 0.01 M HCl per 100 mL of Test Liquid (mL)	
Filling Volume (mL)	Types I and II	Type III
Up to 1	2.0	20.0
Above 1 and up to 2	1.8	17.6
Above 2 and up to 5	1.3	13.2
Above 5 and up to 10	1.0	10.2
Above 10 and up to 20	0.80	8.1
Above 20 and up to 50	0.60	6.1
Above 50 and up to 100	0.50	4.8
Above 100 and up to 200	0.40	3.8
Above 200 and up to 500	0.30	2.9
Above 500	0.20	2.2

SURFACE ETCHING TEST

The *Surface Etching Test* is used in addition to the *Surface Glass Test* when it is necessary to determine whether a container has been surface treated and/or to distinguish between Type I and Type II glass containers. Alternatively, the *Glass Grains Test* and *Surface Glass Test* may be used. The *Surface Etching Test* may be carried out either on unused samples or on samples used in the *Surface Glass Test*.

Method

Vials and Bottles—The volumes of test liquid required are shown in *Table 4*. Rinse the containers twice with Purified Water, fill to the brimful point with a mixture of 1 volume of hydrofluoric acid and 9 volumes of hydrochloric acid, and allow to stand for 10 minutes. Empty the containers, and rinse carefully five times with Purified Water. Immediately before the test, rinse once again with Purified Water. Submit these containers to the same autoclaving and determination procedure as described for the *Surface Glass Test*. If the results are considerably higher than those obtained from the original surfaces (by a factor of about 5 to 10), the samples have been surface treated. [*Caution—Hydrofluoric acid is extremely aggressive. Even small quantities can cause life threatening injuries.*]

Ampuls, Cartridges, and Syringes—Apply the test method as described for *Vials and Bottles*. If the ampuls, cartridges, and syringes are not surface treated, the values obtained are slightly lower than those obtained in the previous tests. [NOTE—Ampuls, cartridges, and syringes made from Type I glass tubing are not normally subjected to internal surface treatment.]

Distinction Between Type I and Type II Glass Containers: The results obtained from the *Surface Etching Test* are compared to those obtained from the *Surface Glass Test*. For Type I glass containers, the values obtained are close to those found in the *Surface Glass Test*. For Type II glass containers, the values obtained greatly exceed those found in the *Surface Glass Test*; and they are similar to, but not larger than, those obtained for Type III glass containers of the same filling volume.

IMPURITIES

Arsenic ⟨211⟩

Use as the *Test Preparation* 35 mL of the water from one Type I or one Type II glass container, or, in the case of smaller containers, 35 mL of the combined contents of several Type I or Type II glass containers, prepared as directed for the *Surface Glass Test*. The limit does not exceed 0.1 µg per g.

FUNCTIONALITY

Spectral Transmission for Colored Glass Containers

Apparatus: A UV-Vis spectrophotometer, equipped with either a photodiode detector or a photomultiplier tube coupled with an integrating sphere.

Preparation of Sample: Break the glass container or cut it with a circular saw fitted with a wet abrasive wheel, such as a carborundum or a bonded diamond wheel. Select sections representative of the wall thickness, and trim them as suitable for mounting in a spectrophotometer. After cutting, wash and dry each specimen, taking care to avoid scratching the surfaces. If the specimen is too small to cover the opening in the specimen holder, mask the uncovered portion of the opening with opaque paper or tape, provided that the length of the specimen is greater than that of the slit. Before placing in the holder, wash, dry, and wipe

Copyright (c) 2013 The United States Pharmacopeial Convention. All rights reserved.

the specimen with lens tissue. Mount the specimen with the aid of wax, or by other convenient means, taking care to avoid leaving fingerprints or other marks.

Method: Place the specimen in the spectrophotometer with its cylindrical axis parallel to the slit and in such a way that the light beam is perpendicular to the surface of the section and the losses due to reflection are at a minimum. Measure the transmission of the specimen with reference to air in the spectral region of 290–450 nm, continuously or at intervals of 20 nm.

Limits: The observed spectral transmission for colored glass containers for products for nonparenteral use does not exceed 10% at any wavelength in the range of 290–450 nm, irrespective of the type and capacity of the glass container. The observed spectral transmission in colored glass containers for parenteral products does not exceed the limits given in *Table 6*.

Table 6. Limits of Spectral Transmission for Colored Glass Containers for Parenteral Products

	Maximum Percentage of Spectral Transmission at Any Wavelength between 290 nm and 450 nm	
Nominal Volume (mL)	Flame-Sealed Containers	Containers with Closures
Up to 1	50	25
Above 1 and up to 2	45	20
Above 2 and up to 5	40	15
Above 5 and up to 10	35	13
Above 10 and up to 20	30	12
Above 20	25	10

⟨661⟩ CONTAINERS—PLASTICS

INTRODUCTION

It is the purpose of this chapter to provide standards for plastic materials and components used to package medical articles (pharmaceuticals, biologics, dietary supplements, and devices). Definitions that apply to this chapter are provided in ⟨659⟩ *Packaging and Storage Requirements*. Standards and tests for the functional properties of containers and their components are provided in general chapter *Containers—Performance Testing* ⟨671⟩.

In addition to the standards provided herein, the ingredients added to the polymers, and those used in the fabrication of the containers, must conform to the requirements in the applicable sections of the *Code of Federal Regulations,* Title 21, *Indirect Food Additives,* or have been evaluated by the FDA and determined to be acceptable substances for the listed use.

Plastic articles are identified and characterized by IR spectroscopy and differential scanning calorimetry. Standards are provided in this chapter for the identification and characterization of the different types of plastic, and the test procedures are provided at the end of the chapter. The degree of testing is based on whether or not the container has direct contact with the drug product, and the risk is based on the route of administration.

Plastics are composed of a mixture of homologous polymers, having a range of molecular weights. Plastics may contain other substances such as residues from the polymerization process, plasticizers, stabilizers, antioxidants, pigments, and lubricants. These materials meet the requirements for food contact as provided in the *Code of Federal Regulations,* Title 21. Factors such as plastic composition, processing and cleaning procedures, surface treatment, contacting media, inks, adhesives, absorption and permeability of preservatives, and conditions of storage may also affect the suitability of a plastic for a specific use. Extraction tests are designed to characterize the extracted components and identify possible migrants. The degree or extent of testing for extractables of the component is dependent on the intended use and the degree of risk to adversely impact the efficacy of the compendial article (drug, biologic, dietary supplement, or device). Resin-specific extraction tests are provided in this chapter for polyethylene, polypropylene, polyethylene terephthalate, and polyethylene terephthalate G. Test all other plastics as directed for *Physicochemical Tests* in the section *Test Methods.* Conduct the *Buffering Capacity* test only when the containers are intended to hold a liquid product.

Plastic components used for products of high risk, such as those intended for inhalation, parenteral preparation, and ophthalmics are tested using the *Biological Tests* in the section *Test Methods.*

Plastic containers intended for packaging products prepared for parenteral use meet the requirements for *Biological Tests* and *Physicochemical Tests* in the section *Test Methods.* Standards are also provided for polyethylene containers used to package dry oral dosage forms that are not meant for constitution into solution.

Accessed from 167.78.4.19 by James Cumbie (ocean22) on Mon Sep 09 15:04:23 EDT 2013

POLYETHYLENE CONTAINERS

Scope

The standards and tests provided in this section characterize containers and components, produced from either low-density polyethylene or high-density polyethylene of either homopolymer or copolymer resins that are interchangeably suitable for packaging dry oral dosage forms not meant for constitution into solution. All polyethylene components are subject to testing by IR spectroscopy and differential scanning calorimetry. Where stability studies have been performed to establish the expiration date of a particular dosage form in the appropriate polyethylene container, then any other polyethylene container meeting these requirements may be similarly used to package such a dosage form, provided that the appropriate stability programs are expanded to include the alternative container, in order to ensure that the identity, strength, quality, and purity of the dosage form are maintained throughout the expiration period.

Background

High-density and low-density polyethylene are long-chain polymers synthesized under controlled conditions of heat and pressure, with the aid of catalysts from not less than 85.0% ethylene and not less than 95.0% total olefins. Other olefin ingredients that are most frequently used are butene, hexene, and propylene. High-density polyethylene and low-density polyethylene both have an IR absorption spectrum that is distinctive for polyethylene, and each possesses characteristic thermal properties. High-density polyethylene has a density between 0.941 and 0.965 g per cm^3. Low-density polyethylene has a density between 0.850 and 0.940 g per cm^3. Other properties that may affect the suitability of polyethylene include modulus of elasticity, melt index, environmental stress crack resistance, and degree of crystallinity after molding.

High-Density Polyethylene

Infrared Spectroscopy—Proceed as directed for *Multiple Internal Reflectance* in the section *Test Methods.* The corrected spectrum of the specimen exhibits major absorption bands only at the same wavelengths as the spectrum of USP High-Density Polyethylene RS.

Differential Scanning Calorimetry—Proceed as directed for *Thermal Analysis* in the section *Test Methods.* The thermogram of the specimen is similar to the thermogram of USP High-Density Polyethylene RS, similarly determined, and the temperature of the endotherm (*melt*) in the thermogram of the specimen does not differ from that of the USP Reference Standard by more than 6.0°.

Heavy Metals and Nonvolatile Residue—Prepare extracts of specimens for these tests as directed for *Physicochemical Tests* under *Test Methods,* except that for each 20.0 mL of *Extracting Medium* the portion shall be 60 cm^2, regardless of thickness.

HEAVY METALS—Containers meet the requirements for *Heavy Metals* in the section *Physicochemical Tests* under *Test Methods.*

NONVOLATILE RESIDUE—Proceed as directed for *Nonvolatile Residue* under *Physicochemical Tests,* except that the *Blank* shall be the same solvent used in each of the following test conditions: the difference between the amounts obtained from the *Sample Preparation* and the *Blank* does not exceed 12.0 mg when water maintained at a temperature of 70° is used as the *Extracting Medium;* does not exceed 75.0 mg when alcohol maintained at a temperature of 70° is used as the *Extracting Medium;* and does not exceed 100.0 mg when hexanes maintained at a temperature of 50° is used as the *Extracting Medium.*

Components Used in Contact with Oral Liquids—Proceed as directed for *Buffering Capacity* in the section *Physicochemical Tests* under *Test Methods.*

Low-Density Polyethylene

Infrared Spectroscopy—Proceed as directed for *Multiple Internal Reflectance* under *Test Methods.* The corrected spectrum of the specimen exhibits major absorption bands only at the same wavelengths as the spectrum of USP Low-Density Polyethylene RS.

Differential Scanning Calorimetry—Proceed as directed for *Thermal Analysis* under *Test Methods.* The thermogram of the specimen is similar to the thermogram of USP Low-Density Polyethylene RS, similarly determined, and the temperature of the endotherm (*melt*) in the thermogram of the specimen does not differ from that of the USP Reference Standard by more than 8.0°.

Heavy Metals and Nonvolatile Residue—Prepare extracts of specimens for these tests as directed for *Sample Preparation* in the section *Physicochemical Tests* under *Test Methods,* except that for each 20.0 mL of *Extracting Medium* the portion shall be 60 cm^2, regardless of thickness.

HEAVY METALS—Containers meet the requirements for *Heavy Metals* in the section *Physicochemical Tests* under *Test Methods.*

NONVOLATILE RESIDUE—Proceed as directed for *Nonvolatile Residue* in the section *Physicochemical Tests* under *Test Methods,* except that the *Blank* shall be the same solvent used in each of the following test conditions: the difference between the amounts obtained from the *Sample Preparation* and the *Blank* does not exceed 12.0 mg when water maintained at a temperature of 70° is used as the *Extracting Medium;* does not exceed 75.0 mg when alcohol maintained at a temperature of 70° is used as the *Extracting Medium;* and does not exceed 350.0 mg when hexanes maintained at a temperature of 50° is used as the *Extracting Medium.*

Components Used in Contact with Oral Liquids—Proceed as directed for *Buffering Capacity* in the section *Physicochemical Tests* under *Test Methods.*

Copyright (c) 2013 The United States Pharmacopeial Convention. All rights reserved.

POLYPROPYLENE CONTAINERS

Scope

The standards and tests provided in this section characterize polypropylene containers, produced from either homopolymers or copolymers, that are interchangeably suitable for packaging dry solid and liquid oral dosage forms. Where suitable stability studies have been performed to establish the expiration date of a particular dosage form in the appropriate polypropylene container, then any other polypropylene container meeting these requirements may be similarly used to package such a dosage form, provided that the appropriate stability programs are expanded to include the alternative container, in order to ensure that the identity, strength, quality, and purity of the dosage form are maintained throughout the expiration period.

Background

Propylene polymers are long-chain polymers synthesized from propylene or propylene and other olefins under controlled conditions of heat and pressure, with the aid of catalysts. Examples of other olefins most commonly used include ethylene and butene. The propylene polymers, the ingredients used to manufacture the propylene polymers, and the ingredients used in the fabrication of the containers conform to the applicable sections of the *Code of Federal Regulations,* Title 21.

Factors such as plastic composition, processing and cleaning procedures, contacting media, inks, adhesives, absorption, adsorption and permeability of preservatives, and conditions of storage may also affect the suitability of a plastic for a specific use. The suitability of a specific polypropylene must be established by appropriate testing.

Polypropylene has a distinctive IR spectrum and possesses characteristic thermal properties. It has a density between 0.880 and 0.913 g per cm^3. The permeation properties of molded polypropylene containers may be altered when reground polymer is incorporated, depending on the proportion of reground material in the final product. Other properties that may affect the suitability of polypropylene used in containers for packaging drugs are the following: oxygen and moisture permeability, modulus of elasticity, melt flow index, environmental stress crack resistance, and degree of crystallinity after molding. The requirements in this section are to be met when dry solid and liquid oral dosage forms are to be packaged in a container defined by this section.

Infrared Spectroscopy—Proceed as directed for *Multiple Internal Reflectance* under *Test Methods.* The corrected spectrum of the specimen exhibits major absorption bands only at the same wavelengths as the spectrum of the respective USP Homopolymer Polypropylene RS or copolymer polypropylene standard, similarly determined.

Differential Scanning Calorimetry—Proceed as directed for *Thermal Analysis* under *Test Methods.* The temperature of the endotherm (*melt*) in the thermogram does not differ from that of the USP Reference Standard for homopolymers by more than 6.0°. The temperature of the endotherm obtained from the thermogram of the copolymer polypropylene specimen does not differ from that of the copolymer polypropylene standard by more than 12.0°.

Heavy Metals and Nonvolatile Residue—Prepare extracts of specimens for these tests as directed for *Sample Preparation* in the section *Physicochemical Tests* under *Test Methods,* except that for each 20 mL of *Extracting Medium* the portion shall be 60 cm^2, regardless of thickness.

HEAVY METALS—Containers meet the requirements for *Heavy Metals* in the section *Physicochemical Tests* under *Test Methods.*

NONVOLATILE RESIDUE—Proceed as directed for *Nonvolatile Residue* in the section *Physicochemical Tests* under *Test Methods,* except that the *Blank* shall be the same solvent used in each of the following test conditions: the difference between the amounts obtained from the *Sample Preparation* and the *Blank* does not exceed 10.0 mg when water maintained at a temperature of 70° is used as the *Extracting Medium;* does not exceed 60.0 mg when alcohol maintained at a temperature of 70° is used as the *Extracting Medium;* and does not exceed 225.0 mg when hexanes maintained at a temperature of 50° is used as the *Extracting Medium.* Containers meet these requirements for *Nonvolatile Residue* for all of the above extracting media. [NOTE—Hexanes and alcohol are flammable. When evaporating these solvents, use a current of air with the water bath; when drying the residue, use an explosion-proof oven.]

Components Used in Contact with Oral Liquids—Proceed as directed for *Buffering Capacity* in the section *Physicochemical Tests* under *Test Methods.*

POLYETHYLENE TEREPHTHALATE BOTTLES AND POLYETHYLENE TEREPHTHALATE G CONTAINERS

Scope

The standards and tests provided in this section characterize polyethylene terephthalate (PET) and polyethylene terephthalate G (PETG) bottles that are interchangeably suitable for packaging liquid oral dosage forms. Where stability studies have been performed to establish the expiration date of a particular liquid oral dosage form in a bottle meeting the requirements set forth herein for either PET or PETG bottles, any other PET or PETG bottle meeting these requirements may be similarly used to package such a dosage form, provided that the appropriate stability programs are expanded to include the alternative bottle in order to ensure that the identity, strength, quality, and purity of the dosage form are maintained throughout the expiration period. The suitability of a specific PET or PETG bottle for use in the dispensing of a particular pharmaceutical liquid oral dosage form must be established by appropriate testing.

Accessed from 167.78.4.19 by James Cumbie (ocean22) on Mon Sep 09 15:04:23 EDT 2013

Background

PET resins are long-chain crystalline polymers prepared by the condensation of ethylene glycol with dimethyl terephthalate or terephthalic acid. PET copolymer resins are prepared in a similar way, except that they may also contain a small amount of either isophthalic acid (not more than 3 mole percent) or 1,4-cyclohexanedimethanol (not more than 5 mole percent). Polymerization is conducted under controlled conditions of heat and vacuum, with the aid of catalysts and stabilizers.

PET copolymer resins have physical and spectral properties similar to PET and for practical purposes are treated as PET. The tests and specifications provided in this section to characterize PET resins and bottles apply also to PET copolymer resins and to bottles fabricated from them.

PET and PET copolymer resins generally exhibit a large degree of order in their molecular structure. As a result, they exhibit characteristic composition-dependent thermal behavior, including a glass transition temperature of about 76° and a melting temperature of about 250°. These resins have a distinctive IR absorption spectrum that allows them to be distinguished from other plastic materials (e.g., polycarbonate, polystyrene, polyethylene, and PETG resins). PET and PET copolymer resins have a density between 1.3 and 1.4 g per cm^3 and a minimum intrinsic viscosity of 0.7 dL per g, which corresponds to a number average molecular weight of about 23,000 Da.

PETG resins are high molecular weight polymers prepared by the condensation of ethylene glycol with dimethyl terephthalate or terephthalic acid and 15 to 34 mole percent of 1,4-cyclohexanedimethanol. PETG resins are clear, amorphous polymers, having a glass transition temperature of about 81° and no crystalline melting point, as determined by differential scanning calorimetry. PETG resins have a distinctive IR absorption spectrum that allows them to be distinguished from other plastic materials, including PET. PETG resins have a density of approximately 1.27 g per cm^3 and a minimum intrinsic viscosity of 0.65 dL per g, which corresponds to a number average molecular weight of about 16,000 Da.

PET and PETG resins, and other ingredients used in the fabrication of these bottles, conform to the requirements in the applicable sections of the *Code of Federal Regulations,* Title 21, regarding use in contact with food and alcoholic beverages. PET and PETG resins do not contain any plasticizers, processing aids, or antioxidants. Colorants, if used in the manufacture of PET and PETG bottles, do not migrate into the contained liquid.

Infrared Spectroscopy—Proceed as directed under *Multiple Internal Reflectance* in the section *Test Methods.* The corrected spectrum of the specimen exhibits major absorption bands only at the same wavelengths as the spectrum of USP Polyethylene Terephthalate RS, or USP Polyethylene Terephthalate G RS, similarly determined.

Differential Scanning Calorimetry—Proceed as directed under *Thermal Analysis* in the section *Test Methods.* For polyethylene terephthalate, the thermogram of the specimen is similar to the thermogram of USP Polyethylene Terephthalate RS, similarly determined: the melting point (T_m) of the specimen does not differ from that of the USP Reference Standard by more than 9.0°, and the glass transition temperature (T_g) of the specimen does not differ from that of the USP Reference Standard by more than 4.0°. For polyethylene terephthalate G, the thermogram of the specimen is similar to the thermogram of USP Polyethylene Terephthalate G RS, similarly determined: the glass transition temperature (T_g) of the specimen does not differ from that of the USP Reference Standard by more than 6.0°.

Colorant Extraction—Select three test bottles. Cut a relatively flat portion from the side wall of one bottle, and trim it as necessary to fit the sample holder of the spectrophotometer. Obtain the visible spectrum of the side wall by scanning the portion of the visible spectrum from 350 to 700 nm. Determine, to the nearest 2 nm, the wavelength of maximum absorbance. Fill the remaining two test bottles, using 50% alcohol for PET bottles and 25% alcohol for PETG bottles. Fit the bottles with impervious seals, such as aluminum foil, and apply closures. Fill a glass bottle having the same capacity as that of the test bottles with the corresponding solvent, fit the bottle with an impervious seal, such as aluminum foil, and apply a closure. Incubate the test bottles and the glass bottle at 49° for 10 days. Remove the bottles, and allow them to equilibrate to room temperature. Concomitantly determine the absorbances of the test solutions in 5-cm cells at the wavelength of maximum absorbance (see *Spectrophotometry and Light–Scattering* ⟨851⟩), using the corresponding solvent from the glass bottle as the blank. The absorbance values so obtained are less than 0.01 for both test solutions.

Heavy Metals, Total Terephthaloyl Moieties, and Ethylene Glycol—

EXTRACTING MEDIA—

Purified Water—(see monograph).

50 Percent Alcohol—Dilute 125 mL of alcohol with water to 238 mL, and mix.

25 Percent Alcohol—Dilute 125 mL of *50 Percent Alcohol* with water to 250 mL, and mix.

n-Heptane.

GENERAL PROCEDURE—[NOTE—Use an *Extracting Medium* of *50 Percent Alcohol* for PET bottles and *25 Percent Alcohol* for PETG bottles.] For each *Extracting Medium,* fill a sufficient number of test bottles to 90% of their nominal capacity to obtain not less than 30 mL. Fill a corresponding number of glass bottles with *Purified Water*, a corresponding number of glass bottles with *50 Percent Alcohol* or *25 Percent Alcohol,* and a corresponding number of glass bottles with *n-Heptane* for use as *Extracting Media* blanks. Fit the bottles with impervious seals, such as aluminum foil, and apply closures. Incubate the test bottles and the glass bottles at 49° for 10 days. Remove the test bottles with the *Extracting Media* samples and the glass bottles with the *Extracting Media* blanks, and store them at room temperature. Do not transfer the *Extracting Media* samples to alternative storage vessels.

HEAVY METALS—Pipet 20 mL of the *Purified Water* extract of the test bottles, filtered if necessary, into one of two matched 50-mL color-comparison tubes, and retain the remaining *Purified Water* extract in the test bottles for use in the test for *Ethylene Glycol*. Adjust the extract with 1 N acetic acid or 6 N ammonium hydroxide to a pH between 3.0 and 4.0, using short-range pH paper as an external indicator. Dilute with water to about 35 mL, and mix.

Copyright (c) 2013 The United States Pharmacopeial Convention. All rights reserved.

Into the second color-comparison tube, pipet 2 mL of freshly prepared (on day of use) *Standard Lead Solution* (see *Heavy Metals* ⟨231⟩), and add 20 mL of *Purified Water*. Adjust with 1 N acetic acid or 6 N ammonium hydroxide to a pH between 3.0 and 4.0, using short-range pH paper as an external indicator. Dilute with water to about 35 mL, and mix.

To each tube add 1.2 mL of thioacetamide–glycerin base TS and 2 mL of *pH 3.5 Acetate Buffer* (see *Heavy Metals* ⟨231⟩), dilute with water to 50 mL, and mix: any color produced within 10 minutes in the tube containing the *Purified Water* extract of the test bottles does not exceed that in the tube containing the *Standard Lead Solution,* both tubes being viewed downward over a white surface (1 ppm in extract).

TOTAL TEREPHTHALOYL MOIETIES—Determine the absorbance of the *50 Percent Alcohol* or *25 Percent Alcohol* extract in a 1-cm cell at the wavelength of maximum absorbance at about 244 nm (see *Spectrophotometry and Light-Scattering* ⟨851⟩), using as the blank the corresponding *Extracting Medium* blank: the absorbance of the extract does not exceed 0.150, corresponding to not more than 1 ppm of total terephthaloyl moieties.

Determine the absorbance of the *n-Heptane* extract in a 1-cm cell at the wavelength of maximum absorbance at about 240 nm (see *Spectrophotometry and Light-Scattering* ⟨851⟩), using as the blank the *n-Heptane Extracting Medium:* the absorbance of the extract does not exceed 0.150, corresponding to not more than 1 ppm of total terephthaloyl moieties.

ETHYLENE GLYCOL—

Periodic Acid Solution—Dissolve 125 mg of periodic acid in 10 mL of water.

Dilute Sulfuric Acid—To 50 mL of water add slowly and with constant stirring 50 mL of sulfuric acid, and allow to cool to room temperature.

Sodium Bisulfite Solution—Dissolve 0.1 g of sodium bisulfite in 10 mL of water. Use this solution within 7 days.

Disodium Chromotropate Solution—Dissolve 100 mg of disodium chromotropate in 100 mL of sulfuric acid. Protect this solution from light, and use within 7 days.

Standard Solution—Dissolve an accurately weighed quantity of ethylene glycol in water, and dilute quantitatively, and stepwise if necessary, to obtain a solution having a known concentration of about 1 µg per mL.

Test Solution—Use the *Purified Water* extract.

Procedure—Transfer 1.0 mL of the *Standard Solution* to a 10-mL volumetric flask. Transfer 1.0 mL of the *Test Solution* to a second 10-mL volumetric flask. Transfer 1.0 mL of the *Purified Water Extracting Medium* to a third 10-mL volumetric flask. To each of the three flasks, add 100 µL of *Periodic Acid Solution,* swirl to mix, and allow to stand for 60 minutes. Add 1.0 mL of *Sodium Bisulfite Solution* to each flask, and mix. Add 100 µL of *Disodium Chromotropate Solution* to each flask, and mix. [NOTE—All solutions should be analyzed within 1 hour after addition of the *Disodium Chromotropate Solution*.] Cautiously add 6 mL of sulfuric acid to each flask, mix, and allow the solutions to cool to room temperature. *[Caution–Dilution of sulfuric acid produces substantial heat and can cause the solution to boil. Perform this addition carefully. Sulfur dioxide gas will be evolved. Use of a fume hood is recommended.]* Dilute each solution with *Dilute Sulfuric Acid* to volume, and mix. Concomitantly determine the absorbances of the solutions from the *Standard Solution* and the *Test Solution* in 1-cm cells at the wavelength of maximum absorbance at about 575 nm (see *Spectrophotometry and Light-Scattering* ⟨851⟩), using as the blank the solution from the *Purified Water Extracting Medium:* the absorbance of the solution from the *Test Solution* does not exceed that of the solution from the *Standard Solution,* corresponding to not more than 1 ppm of ethylene glycol.

TEST METHODS

Multiple Internal Reflectance

Apparatus—Use an IR spectrophotometer capable of correcting for the blank spectrum and equipped with a multiple internal reflectance accessory and a KRS-5 internal reflection plate.[1] A KRS-5 crystal 2-mm thick having an angle of incidence of 45° provides a sufficient number of reflections.

Specimen Preparation—Cut two flat sections representative of the average wall thickness of the container, and trim them as necessary to obtain segments that are convenient for mounting in the multiple internal reflectance accessory. Taking care to avoid scratching the surfaces, wipe the specimens with dry paper or, if necessary, clean them with a soft cloth dampened with methanol, and permit them to dry. Securely mount the specimens on both sides of the KRS-5 internal reflection plate, ensuring adequate surface contact. Prior to mounting the specimens on the plate, they may be compressed to thin uniform films by exposing them to temperatures of about 177° under high pressures (15,000 psi or more).

General Procedure—Place the mounted specimen sections within the multiple internal reflectance accessory, and place the assembly in the specimen beam of the IR spectrophotometer. Adjust the specimen position and mirrors within the accessory to permit maximum light transmission of the unattenuated reference beam. (For a double-beam instrument, upon completing the adjustments in the accessory, attenuate the reference beam to permit full-scale deflection during the scanning of the specimen.) Determine the IR spectrum from 3500 to 600 cm^{-1} for polyethylene and polypropylene and from 4000 to 400 cm^{-1} for PET and PETG.

[1]The multiple internal reflectance accessory and KRS-5 plate are available from several sources, including Beckman Instruments, Inc., 2500 Harbor Blvd., Fullerton, CA 92634, and from Perkin Elmer Corp., Main Ave., Norwalk, CT 06856.

Accessed from 167.78.4.19 by James Cumbie (ocean22) on Mon Sep 09 15:04:23 EDT 2013

Thermal Analysis

General Procedure—Cut a section weighing about 12 mg, and place it in the test specimen pan. [NOTE—Intimate contact between the pan and the thermocouple is essential for reproducible results.] Determine the thermogram under nitrogen, using the heating and cooling conditions as specified for the resin type and using equipment capable of performing the determinations as specified under *Thermal Analysis* ⟨891⟩.

For Polyethylene—Determine the thermogram under nitrogen at temperatures between 40° and 200° at a heating rate between 2° and 10° per minute followed by cooling at a rate between 2° and 10° per minute to 40°.

For Polypropylene—Determine the thermogram under nitrogen at temperatures ranging from ambient to 30° above the melting point. Maintain the temperature for 10 minutes, then cool to 50° below the peak crystallization temperature at a rate of 10° to 20° per minute.

For Polyethylene Terephthalate—Heat the specimen from room temperature to 280° at a heating rate of about 20° per minute. Hold the specimen at 280° for 1 minute. Quickly cool the specimen to room temperature, and reheat it to 280° at a heating rate of about 5° per minute.

For Polyethylene Terephthalate G—Heat the specimen from room temperature to 120° at a heating rate of about 20° per minute. Hold the specimen at 120° for 1 minute. Quickly cool the specimen to room temperature, and reheat it to 120° at a heating rate of about 10° per minute.

Biological Tests

The in vitro biological tests are performed according to the procedures set forth under *Biological Reactivity Test, In Vitro* ⟨87⟩. Components that meet the requirements of the in vitro tests are not required to undergo further testing. No plastic class designation is assigned to these materials. Materials that do not meet the requirements of the in vitro tests are not suitable for containers for drug products.

If a plastic class designation is needed for plastics and other polymers that meet the requirements under *Biological Reactivity Test, In Vitro* ⟨87⟩, perform the appropriate in vivo test specified for *Classification of Plastics* under *Biological Reactivity Test, In Vivo* ⟨88⟩.

Physicochemical Tests

The following tests, designed to determine physical and chemical properties of plastics and their extracts, are based on the extraction of the plastic material, and it is essential that the designated amount of the plastic be used. Also, the specified surface area must be available for extraction at the designated temperature.

Testing Parameters—

Extracting Medium—Unless otherwise directed in a specific test below, use *Purified Water* (see monograph) as the *Extracting Medium,* maintained at a temperature of 70° during the extraction of the *Sample Preparation.*

Blank—Use *Purified Water* where a blank is specified in the tests that follow.

Apparatus—Use a water bath and the *Extraction Containers* as described under *Biological Reactivity Tests, In Vivo* ⟨88⟩. Proceed as directed in the first paragraph of *Preparation of Apparatus* under *Biological Reactivity Tests, In Vivo* ⟨88⟩. [NOTE—The containers and equipment need not be sterile.]

Sample Preparation—From a homogeneous plastic specimen, use a portion, for each 20.0 mL of *Extracting Medium,* equivalent to 120 cm^2 total surface area (both sides combined), and subdivide into strips approximately 3 mm in width and as near to 5 cm in length as is practical. Transfer the subdivided sample to a glass-stoppered, 250-mL graduated cylinder of Type I glass, and add about 150 mL of *Purified Water*. Agitate for about 30 seconds, drain off and discard the liquid, and repeat with a second washing.

Sample Preparation Extract—Transfer the prepared *Sample Preparation* to a suitable extraction flask, and add the required amount of *Extracting Medium.* Extract by heating in a water bath at the temperature specified for the *Extracting Medium* for 24 hours. Cool, but not below 20°. Pipet 20 mL of the prepared extract into a suitable container. [NOTE—Use this portion in the test for *Buffering Capacity*.] Immediately decant the remaining extract into a suitably cleansed container, and seal.

Nonvolatile Residue—Transfer, in suitable portions, 50.0 mL of the *Sample Preparation Extract* to a suitable, tared crucible (preferably a fused-silica crucible that has been acid-cleaned), and evaporate the volatile matter on a steam bath. Similarly evaporate 50.0 mL of the *Blank* in a second crucible. [NOTE—If an oily residue is expected, inspect the crucible repeatedly during the evaporation and drying period, and reduce the amount of heat if the oil tends to creep along the walls of the crucible.] Dry at 105° for 1 hour: the difference between the amounts obtained from the *Sample Preparation Extract* and the *Blank* does not exceed 15 mg.

Residue on Ignition ⟨281⟩—[NOTE—It is not necessary to perform this test when the *Nonvolatile Residue* test result does not exceed 5 mg.] Proceed with the residues obtained from the *Sample Preparation Extract* and from the *Blank* in the test for *Nonvolatile Residue* above, using, if necessary, additional sulfuric acid but adding the same amount of sulfuric acid to each crucible: the difference between the amounts of residue on ignition obtained from the *Sample Preparation Extract* and the *Blank* does not exceed 5 mg.

Heavy Metals—Pipet 20 mL of the *Sample Preparation Extract,* filtered if necessary, into one of two matched 50-mL color-comparison tubes. Adjust with 1 N acetic acid or 6 N ammonium hydroxide to a pH between 3.0 and 4.0, using short-range pH paper as an external indicator, dilute with water to about 35 mL, and mix.

Copyright (c) 2013 The United States Pharmacopeial Convention. All rights reserved.

Into the second color-comparison tube pipet 2 mL of *Standard Lead Solution* (see *Heavy Metals* ⟨231⟩), and add 20 mL of the *Blank*. Adjust with 1 N acetic acid or 6 N ammonium hydroxide to a pH between 3.0 and 4.0, using short-range pH paper as an external indicator, dilute with water to about 35 mL, and mix. To each tube add 1.2 mL of thioacetamide–glycerin base TS and 2 mL of *pH 3.5 Acetate Buffer* (see *Heavy Metals* ⟨231⟩), dilute with water to 50 mL, and mix: any brown color produced within 10 minutes in the tube containing the *Sample Preparation Extract* does not exceed that in the tube containing the *Standard Lead Solution,* both tubes being viewed downward over a white surface (1 ppm in extract).

Buffering Capacity—Titrate the previously collected 20-mL portion of the *Sample Preparation Extract* potentiometrically to a pH of 7.0, using either 0.010 N hydrochloric acid or 0.010 N sodium hydroxide, as required. Treat a 20.0-mL portion of the *Blank* similarly: if the same titrant was required for both the *Sample Preparation Extract* and the *Blank*, the difference between the two volumes is not greater than 10.0 mL; and if acid was required for either the *Sample Preparation Extract* or the *Blank* and alkali for the other, the total of the two volumes required is not greater than 10.0 mL.

⟨671⟩ CONTAINERS—PERFORMANCE TESTING

It is the purpose of this chapter to provide standards for the functional properties of containers and their components used to package regulated articles (pharmaceuticals, biologics, dietary supplements, and devices). Definitions that apply to this chapter are provided in ⟨659⟩ *Packaging and Storage Requirements*. The tests that follow are provided to determine the moisture permeability and light transmission of containers utilized for regulated articles. The section *Multiple-Unit Containers for Capsules and Tablets* applies to multiple-unit containers. The section *Single-Unit Containers and Unit-Dose Containers for Capsules and Tablets* applies to single-unit and unit-dose containers. The section *Multiple-Unit Containers for Capsules and Tablets (Without Closure)* applies to polyethylene and polypropylene containers that have no closures. The section *Multiple-Unit and Single-Unit Containers for Liquids* applies to multiple-unit and single-unit containers.

A container intended to provide protection from light or offered as a *light-resistant* container meets the requirements for *Light Transmission,* where such protection or resistance is by virtue of the specific properties of the material of which the container is composed, including any coating applied thereto. A clear and colorless or a translucent container that is made *light-resistant* by means of an opaque enclosure (see *General Notices and Requirements*) is exempt from the requirements for *Light Transmission.* As used herein, the term "container" refers to the entire system comprising, usually, the container itself, the liner (if used), the closure in the case of multiple-unit containers, and the lidding and blister in the case of unit-dose containers.

MOISTURE PERMEATION

Multiple-Unit Containers for Capsules and Tablets

Desiccant—Place a quantity of 4- to 8-mesh, anhydrous calcium chloride[1] in a shallow container, taking care to exclude any fine powder, then dry at 110° for 1 hour, and cool in a desiccator.

Procedure—Select 12 containers of a uniform size and type, clean the sealing surfaces with a lint-free cloth, and close and open each container 30 times. Apply the closure firmly and uniformly each time the container is closed. Close screw-capped containers with a torque that is within the range of tightness specified in the accompanying table. Add *Desiccant* to 10 of the containers, designated *test containers,* filling each to within 13 mm of the closure if the container volume is 20 mL or more, or filling each to two-thirds of capacity if the container volume is less than 20 mL. If the interior of the container is more than 63 mm in depth, an inert filler or spacer may be placed in the bottom to minimize the total weight of the container and *Desiccant;* the layer of *Desiccant* in such a container shall be not less than 5 cm in depth. Close each immediately after adding *Desiccant,* applying the torque designated in the accompanying table when closing screw-capped containers. To each of the remaining 2 containers, designated *controls*, add a sufficient number of glass beads to attain a weight approximately equal to that of each of the *test containers,* and close, applying the torque designated in the accompanying table when closing screw-capped containers. Record the weight of the individual containers so prepared to the nearest 0.1 mg if the container volume is less than 20 mL; to the nearest mg if the container volume is 20 mL or more but less than 200 mL; or to the nearest centigram (10 mg) if the container volume is 200 mL or more; and store at 75 ± 3% relative humidity and a temperature of 23 ± 2°. [NOTE—A saturated system of 35 g of sodium chloride with each 100 mL of water placed in the bottom of a desiccator maintains the specified humidity. Other methods may be employed to maintain these conditions.] After 336 ± 1 hours (14 days), record the weight of the individual containers in the same manner. Completely fill 5 empty containers of the same size and type as the containers under test with water or a noncompressible, free-flowing solid such as well-tamped fine glass beads, to the level indicated by the closure surface when in place. Transfer the contents

[1]Suitable 4- to 8-mesh, anhydrous calcium chloride is available commercially as Item JT1313-1 from VWR International. Consult the VWR International catalog for ordering information or call 1-800-234-9300.

Accessed from 167.78.4.19 by James Cumbie (ocean22) on Mon Sep 09 15:04:23 EDT 2013

of each to a graduated cylinder, and determine the average container volume, in mL. Calculate the rate of moisture permeability, in mg per day per L, by the formula:

$$(1000/14V)[(T_F - T_I) - (C_F - C_I)]$$

in which V is the volume, in mL, of the container; $(T_F - T_I)$ is the difference, in mg, between the final and initial weights of each *test container;* and $(C_F - C_I)$ is the difference, in mg, between the average final and average initial weights of the 2 *controls.* For containers used for drugs being dispensed on prescription, the containers so tested are *tight containers* if not more than 1 of the 10 *test containers* exceeds 100 mg per day per L in moisture permeability, and none exceeds 200 mg per day per L.

For containers used for drugs being dispensed on prescription, the containers are *well-closed containers* if not more than 1 of the 10 *test containers* exceeds 2000 mg per day per L in moisture permeability, and none exceeds 3000 mg per day per L.

Table 1. Torque Applicable to Screw-Type Container

Closure Diameter[a] (mm)	Suggested Tightness Range with Manually Applied Torque[b] (inch-pounds)
8	5
10	6
13	8
15	5–9
18	7–10
20	8–12
22	9–14
24	10–18
28	12–21
30	13–23
33	15–25
38	17–26
43	17–27
48	19–30
53	21–36
58	23–40
63	25–43
66	26–45
70	28–50
83	32–65
86	40–65
89	40–70
100	45–70
110	45–70
120	55–95
132	60–95

[a]The torque designated for the next larger closure diameter is to be applied in testing containers having a closure diameter intermediate to the diameters listed.

[b]A suitable apparatus is available from SecurePak, PO Box 1210, Maumee, Ohio 43537-8210. MRA Model with indicators on both the removal and application sides available in the following ranges: 1) 0–25 inch lbs., read in 1-inch lb. increments, 2) 0–50 inch lbs., read in 2-inch lb. increments, and 3) 0–100 inch lbs., read in 5-inch lb. increments. For further detail regarding instructions, reference may be made to "Standard Test Method for Application and Removal Torque of Threaded or Lug-Style Closures" ASTM Method D3198-02, published by the American Society for Testing and Materials, 100 Barr Harbor Drive, P.O. Box C700, West Conshohocken, PA 19428-2959.

Multiple-Unit Containers for Capsules and Tablets (Without Closure)

Polyethylene Container—Fit the containers with impervious seals obtained by heat-sealing the bottles with an aluminum foil–polyethylene laminate or other suitable seal.[2] Test the containers as specified under *Multiple-Unit Containers for Capsules and Tablets:* the high-density polyethylene containers so tested meet the requirements if the moisture permeability exceeds 10 mg per day per L in not more than 1 of the 10 test containers and exceeds 25 mg per day per L in none of them. The low-density polyethylene containers so tested meet the requirements if the moisture permeability exceeds 20 mg per day per L in not more than 1 of the 10 test containers and exceeds 30 mg per day per L in none of them.

Polypropylene Containers—Fit the containers with impervious seals obtained by heat-sealing the bottles with an aluminum foil–polyethylene laminate or other suitable seal. Test the containers as described under *Multiple-Unit Containers for Capsules and*

[2]A suitable laminate for sealing has, as the container layer, polyethylene of not less than 0.025 mm (0.001 inch) and a second layer of aluminum foil of not less than 0.018 mm (0.0007 inch), with additional layers of suitable backing materials. A suitable seal can be obtained also by using glass plates and a sealing wax consisting of 60% of refined amorphous wax and 40% of refined crystalline paraffin wax.

Copyright (c) 2013 The United States Pharmacopeial Convention. All rights reserved.

Tablets. The containers meet the requirements if the moisture permeability exceeds 15 mg per day per L in not more than 1 of the 10 test containers and exceeds 25 mg per day per L in none of them.

Single-Unit Containers and Unit-Dose Containers for Capsules and Tablets

To permit an informed judgment regarding the suitability of the packaging for a particular type of product, the following procedure and classification scheme are provided for evaluating the moisture-permeation characteristics of single-unit and unit-dose containers. Inasmuch as equipment and operator performance may affect the moisture permeation of a container formed or closed, the moisture-permeation characteristics of the packaging system being utilized shall be determined.

Desiccant—Dry suitable desiccant pellets[3] at 110° for 1 hour prior to use. Use pellets weighing approximately 400 mg each and having a diameter of approximately 8 mm. [NOTE—If necessary due to limited unit-dose container size, pellets weighing less than 400 mg each and having a diameter of less than 8 mm may be used.]

Procedure—

Method I—Seal not fewer than 10 unit-dose containers with 1 pellet in each, and seal 10 additional, empty unit-dose containers to provide the controls, using finger cots or padded forceps to handle the sealed containers. Number the containers, and record the individual weights[4] to the nearest mg. Weigh the controls as a unit, and divide the total weight by the number of controls to obtain the average. Store all of the containers at 75 ± 3% relative humidity and at a temperature of 23 ± 2°. [NOTE—A saturated system of 35 g of sodium chloride with each 100 mL of water placed in the bottom of a desiccator maintains the specified humidity. Other methods may be employed to maintain these conditions.] After a 24-hour interval, and at each multiple thereof (see *Results*), remove the containers from the chamber, and allow them to equilibrate for 15 to 60 minutes in the weighing area. Again record the weight of the individual containers and the combined controls in the same manner. [NOTE—If any indicating pellets turn pink during this procedure, or if the pellet weight increase exceeds 10%, terminate the test, and regard only earlier determinations as valid.] Return the containers to the humidity chamber. Calculate the rate of moisture permeation, in mg per day, of each container taken by the formula:

$$(1/N)[(W_F - W_I) - (C_F - C_I)]$$

in which N is the number of days expired in the test period (beginning after the initial 24-hour equilibration period); $(W_F - W_I)$ is the difference, in mg, between the final and initial weights of each test container; and $(C_F - C_I)$ is the difference, in mg, between the average final and average initial weights of the controls, the data being calculated to two significant figures. [NOTE—Where the permeations measured are less than 5 mg per day, and where the controls are observed to reach equilibrium within 7 days, the individual permeations may be determined more accurately by using the 7-day test container and control container weights as W_I and C_I, respectively, in the calculation. In this case, a suitable test interval for *Class A* (see *Results*) would be not less than 28 days following the initial 7-day equilibration period (a total of 35 days).]

Method II—Use this procedure for packs (e.g., punch-out cards) that incorporate a number of separately sealed unit-dose containers or blisters. Seal a sufficient number of packs, such that not fewer than 4 packs and a total of not fewer than 10 unit-dose containers or blisters filled with 1 pellet in each unit are tested. Seal a corresponding number of empty packs, each pack containing the same number of unit-dose containers or blisters as used in the test packs, to provide the controls. Store all of the containers at 75 ± 3% relative humidity and at a temperature of 23 ± 2°. [NOTE—A saturated system of 35 g of sodium chloride with each 100 mL of water placed in the bottom of a desiccator maintains the specified humidity. Other methods may be employed to maintain these conditions.] After 24 hours, and at each multiple thereof (see *Results*), remove the packs from the chamber, and allow them to equilibrate for about 45 minutes. Record the weights of the individual packs, and return them to the chamber. Weigh the control packs as a unit, and divide the total weight by the number of control packs to obtain the average empty pack weight. [NOTE—If any indicating pellets turn pink during the procedure, or if the average pellet weight increase in any pack exceeds 10%, terminate the test, and regard only earlier determinations as valid.] Calculate the average rate of moisture permeation, in mg per day, for each unit-dose container or blister in each pack taken by the formula:

$$(1/NX)[(W_F - W_I) - (C_F - C_I)]$$

in which N is the number of days expired in the test period (beginning after the initial 24-hour equilibration period); X is the number of separately sealed units per pack; $(W_F - W_I)$ is the difference, in mg, between the final and initial weights of each test pack; and $(C_F - C_I)$ is the difference, in mg, between the average final and average initial weights of the control packs, the rates being calculated to two significant figures.

Results—The individual unit-dose containers as tested in *Method I* are designated *Class A* if not more than 1 of 10 containers tested exceeds 0.5 mg per day in moisture permeation rate and none exceeds 1 mg per day; they are designated *Class B* if not more than 1 of 10 containers tested exceeds 5 mg per day and none exceeds 10 mg per day; they are designated *Class C* if not more than 1 of 10 containers tested exceeds 20 mg per day and none exceeds 40 mg per day; and they are designated *Class D* if the containers tested meet none of the moisture permeation rate requirements.

The packs as tested in *Method II* are designated *Class A* if no pack tested exceeds 0.5 mg per day in average blister moisture permeation rate; they are designated *Class B* if no pack tested exceeds 5 mg per day in average blister moisture permeation rate;

[3]Suitable moisture-indicating desiccant pellets are available commercially from sources such as Medical Packaging, Inc., 470 Route 31, Ringoes, NJ 08551-1409 [Telephone 800-257-5282; in NJ, 609-466-8991; FAX 609-466-3775], as Indicating Desiccant Pellets, Item No. TK-1002.

[4]Accurate comparisons of *Class A* containers may require test periods in excess of 28 days if weighings are performed on a *Class A* prescription balance (see *Prescription Balances and Volumetric Apparatus* ⟨1176⟩). The use of an analytical balance on which weights can be recorded to 4 or 5 decimal places may permit more precise characterization between containers and/or shorter test periods.

Accessed from 167.78.4.19 by James Cumbie (ocean22) on Mon Sep 09 15:04:23 EDT 2013

they are designated *Class C* if no pack tested exceeds 20 mg per day in average blister moisture permeation rate; and they are designated *Class D* if the packs tested meet none of the above average blister moisture permeation rate requirements.

With the use of the *Desiccant* described herein, as stated for *Method I* and *Method II*, after every 24 hours, the test and control containers or packs are weighed; and suitable test intervals for the final weighings, W_F and C_F, are as follows: 24 hours for *Class D;* 48 hours for *Class C;* 7 days for *Class B;* and not less than 28 days for *Class A.*

Multiple-Unit Containers and Unit-Dose Containers for Liquids

The standards and tests provided in this section measure the functional and performance characteristics of bottles used to package aqueous products by measuring the liquid water weight loss as a percent of the contents. This test can also be used to demonstrate performance or functional comparability. [NOTE—Throughout the following procedure, determine the weights of individual container–closure systems (bottle, innerseal if used, and closure) both as tare weights and fill weights, to the nearest 0.1 mg if the bottle capacity is less than 200 mL; to the nearest mg if the bottle capacity is 200 mL or more but less than 1000 mL; or to the nearest centigram (10 mg) if the bottle capacity is 1000 mL or more.]

Procedure—Select 12 bottles of a uniform size and type, and clean the sealing surfaces with a lint-free cloth. Fit each bottle with a seal, closure liner (if applicable), and closure. Number each container–closure system, and record the tare weight.

Remove the closures and, using a pipet, fill 10 bottles with water to the fill capacity. Fill 2 containers with glass beads to the same approximate weight of the filled test containers. If using screw closures, apply a torque that is within the range specified in *Table 1,* and store the sealed containers at a temperature of 25 ± 2° and a relative humidity of 40 ± 2%. After 336 ± 1 hours (14 days), record the weight of the individual containers, and calculate the water weight loss rate, in percent per year, for each bottle taken by the formula:

$$(W_{1i} - W_T) - (W_{14i} - W_T) - (WC_1 - WC_{14})\ 365 \times 100/(W_{1i} - W_T)14 = \text{Percent per year}$$

in which W_{1i} is the initial weight of each individual bottle (i); W_T is the tare weight; W_{14i} is the weight of each individual bottle (i) at 14 days; and $(WC_1 - WC_{14})$ is the average weight change of the controls from initial to 14 days.

The containers so tested meet the requirements and are tight containers if the percentage of water weight loss does not exceed 2.5% per year in not more than 1 of the 10 test containers and does not exceeds 5.0% per year in none of them.

LIGHT TRANSMISSION TEST

Apparatus[5]—Use a spectrophotometer of suitable sensitivity and accuracy, adapted for measuring the amount of light transmitted by either transparent or translucent glass or plastic materials used for pharmaceutical containers. In addition, the spectrophotometer is capable of measuring and recording light transmitted in diffused as well as parallel rays.

Procedure—Select sections to represent the average wall thickness. Cut circular sections from two or more areas of the container and trim them as necessary to give segments of a size convenient for mounting in the spectrophotometer. After cutting, wash and dry each specimen, taking care to avoid scratching the surfaces. If the specimen is too small to cover the opening in the specimen holder, mask the uncovered portion of the opening with opaque paper or masking tape, provided that the length of the specimen is greater than that of the slit in the spectrophotometer. Immediately before mounting in the specimen holder, wipe the specimen with lens tissue. Mount the specimen with the aid of a tacky wax, or by other convenient means, taking care to avoid leaving fingerprints or other marks on the surfaces through which light must pass. Place the section in the spectrophotometer with its cylindrical axis parallel to the plane of the slit and approximately centered with respect to the slit. When properly placed, the light beam is normal to the surface of the section and reflection losses are at a minimum.

Continuously measure the transmittance of the section with reference to air in the spectral region of interest with a recording instrument or at intervals of about 20 nm with a manual instrument, in the region of 290 to 450 nm.

Limits—The observed light transmission does not exceed the limits given in *Table 2* for containers intended for parenteral use.

Table 2. Limits for Plastic Classes I–VI and Glass Types I, II, and III

	Maximum Percentage of Light Transmission at Any Wavelength between 290 and 450 nm	
Nominal Size (in mL)	**Flame-sealed Containers**	**Closure-sealed Containers**
1	50	25
2	45	20
5	40	15
10	35	13
20	30	12
50	15	10

[5]For further detail regarding apparatus and procedures, reference may be made to the following publications of the American Society for Testing and Materials, 100 Barr Harbor Drive, West Conshohocken, PA 19428-2959: "Standard Method of Test for Haze and Luminous Transmittance of Transparent Plastics," ASTM Method D1003-07; "Tentative Method of Test for Luminous Reflectance, Transmittance and Color of System"ASTM Method E308-06.

Copyright (c) 2013 The United States Pharmacopeial Convention. All rights reserved.

[NOTE—Any container of a size intermediate to those listed above exhibits a transmission not greater than that of the next larger size container listed in the table. For containers larger than 50 mL, the limits for 50 mL apply.]

The observed light transmission for plastic containers for products intended for oral or topical administration does not exceed 10% at any wavelength in the range from 290 to 450 nm.

Delete the following:

⟨681⟩ REPACKAGING INTO SINGLE-UNIT CONTAINERS AND UNIT-DOSE CONTAINERS FOR NONSTERILE SOLID AND LIQUID DOSAGE FORMS

This chapter is intended to provide guidance to those engaged in pharmaceutical dispensing, not commercial repackaging. An official dosage form is required to bear on its label an expiration date assigned for the particular formulation and package of the article. This date limits the time during which the product may be dispensed or used. Because the expiration date stated on the original manufacturer's container–closure system has been determined for the drug in that particular system and is not intended to be applicable to the product where it has been repackaged in a different container, repackaged drugs dispensed pursuant to a prescription are exempt from using the expiration date from the original manufacturer's package. However, under no circumstance should the repackaged pharmaceutical preparation's expiration date exceed the original manufacturer's expiration date. It is necessary, therefore, that other precautions be taken by the dispenser to preserve the strength, quality, and purity of drugs that are repackaged for ultimate distribution or sale to patients.

The following guidelines and requirements are applicable where official dosage forms are repackaged into single-unit or unit-dose containers or mnemonic packs for dispensing pursuant to prescription.

Labeling—It is the responsibility of the dispenser, taking into account the nature of the drug repackaged, any packaging and expiration dating information in the manufacturer's product labeling, the characteristics of the containers, and the storage conditions to which the article may be subjected, to place a suitable expiration date on the label. Repackaged dosage forms must bear on their labels expiration dates as determined from information in the product labeling (see ⟨659⟩ *Packaging and Storage Requirements*). Each single-unit or unit-dose container bears a separate label, unless the device holding the unit-dose form does not allow for the removal or separation of the intact single-unit or unit-dose container therefrom.

Storage—Store the repackaged article in a humidity-controlled environment and at the temperature specified in the individual monograph or in the product labeling. Where no temperature or humidity is specified in the monograph or in the labeling of the product, controlled room temperature and a relative humidity corresponding to 60% are not to be exceeded during repackaging or storage.

A refrigerator or freezer shall not be considered to be a humidity-controlled environment. Drugs that are to be stored at a cold temperature in a refrigerator or freezer must be protected during storage in the refrigerator or freezer. An outer container may be necessary for such protection; it is recommended that the drug monograph be referenced for storage.

Reprocessing—Reprocessing of repackaged unit-dose containers (i.e., removing dosage unit from one unit-dose container and placing dosage unit into another unit-dose container) shall not be done. However, reprocessing of the secondary package (e.g., removing the blister card from the cardboard carrier and placing the blister card into another cardboard carrier) is allowed provided that the original expiration date is maintained.

CUSTOMIZED PATIENT MEDICATION PACKAGES

In lieu of dispensing two or more prescribed drug products in separate containers, a pharmacist may, with the consent of the patient, the patient's caregiver, or a prescriber, provide a customized patient medication package (patient med pak).[1]

A patient med pak is a package prepared by a pharmacist for a specific patient comprising a series of containers and containing two or more prescribed solid oral dosage forms. The patient med pak is so designed or each container is so labeled as to indicate the day and time, or period of time, that the contents within each container are to be taken.

It is the responsibility of the dispenser to instruct the patient or caregiver on the use of the patient med pak.

Label—The patient med pak shall bear a label stating:

(1) the name of the patient;
(2) a serial number for the patient med pak itself and a separate identifying serial number for each of the prescription orders for each of the drug products contained therein;
(3) the name, strength, physical description or identification, and total quantity of each drug product contained therein;
(4) the directions for use and cautionary statements, if any, contained in the prescription order for each drug product therein;
(5) any storage instructions or cautionary statements required by the official compendia;
(6) the name of the prescriber of each drug product;

[1] It should be noted that there is no special exemption for patient med paks from the requirements of the Poison Prevention Packaging Act. Thus the patient med pak, if it does not meet child-resistant standards, shall be placed in an outer package that does comply, or the necessary consent of the purchaser or physician, to dispense in a container not intended to be child-resistant, shall be obtained.

Accessed from 167.78.4.19 by James Cumbie (ocean22) on Mon Sep 09 15:04:23 EDT 2013

(7) the date of preparation of the patient med pak and the beyond-use date or period of time assigned to the patient med pak (such beyond-use date or period of time shall be not longer than the shortest recommended beyond-use date for any dosage form included therein or not longer than 60 days from the date of preparation of the patient med pak and shall not exceed the shortest expiration date on the original manufacturer's bulk containers for the dosage forms included therein); alternatively, the package label shall state the date of the prescription(s) or the date of preparation of the patient med pak, provided the package is accompanied by a record indicating the start date and the beyond-use date;
(8) the name, address, and telephone number of the dispenser (and the dispenser's registration number where necessary); and
(9) any other information, statements, or warnings required for any of the drug products contained therein.

If the patient med pak allows for the removal or separation of the intact containers therefrom, each individual container shall bear a label identifying each of the drug products contained therein.

Labeling—The patient med pak shall be accompanied by a patient package insert, in the event that any medication therein is required to be dispensed with such insert as accompanying labeling. Alternatively, such required information may be incorporated into a single, overall educational insert provided by the pharmacist for the total patient med pak.

Packaging—In the absence of more stringent packaging requirements for any of the drug products contained therein, each container of the patient med pak shall comply with the moisture permeation requirements for a Class B single-unit or unit-dose container (see *Containers—Performance Testing* ⟨671⟩). Each container shall be either not reclosable or so designed as to show evidence of having been opened.

Guidelines—It is the responsibility of the dispenser, when preparing a patient med pak, to take into account any applicable compendial requirements or guidelines and the physical and chemical compatibility of the dosage forms placed within each container, as well as any therapeutic incompatibilities that may attend the simultaneous administration of the medications. In this regard, pharmacists are encouraged to report to USP headquarters any observed or reported incompatibilities. Once a medication has been placed in a patient med pak with another solid dosage form, it may not be returned to stock, redistributed, or resold if unused.

Recordkeeping—In addition to any individual prescription filing requirements, a record of each patient med pak shall be made and filed. Each record shall contain, as a minimum:
(1) the name and address of the patient;
(2) the serial number of the prescription order for each drug product contained therein;
(3) the name of the manufacturer or labeler and lot number for each drug product contained therein;
(4) information identifying or describing the design, characteristics, or specifications of the patient med pak sufficient to allow subsequent preparation of an identical patient med pak for the patient;
(5) the date of preparation of the patient med pak and the beyond-use date that was assigned;
(6) any special labeling instructions; and
(7) the name or initials of the pharmacist who prepared the patient med pak.

• *USP36*

Change to read:

⟨698⟩ DELIVERABLE VOLUME

Delete the following:

▪The following tests are designed to provide assurance that oral liquids will, when transferred from the original container, deliver the volume of dosage form that is declared on the label of the article. These tests are applicable to products labeled to contain not more than 250 mL, whether supplied as liquid preparations or liquid preparations that are constituted from solids upon the addition of a designated volume of a specific diluent. They are not required for an article packaged in single-unit containers when the monograph includes the *Uniformity of Dosage Units* ⟨905⟩ test.▪2S *(USP36)*

Add the following:

▪PURPOSE

The following tests are designed to provide assurance that oral liquids will, when transferred from the original container, deliver the volume of dosage form that is declared on the label.▪2S *(USP36)*

Add the following:

▪SCOPE

These tests are applicable to products that are dispensed by pouring from the container. The tests apply whether the products are supplied as liquid preparations or liquid preparations that are constituted from solids upon the addition of a designated volume of a specific diluent. They are not required for an article packaged in single-unit containers when the monograph includes the test for *Uniformity of Dosage Units* ⟨905⟩.▪2S *(USP36)*

Copyright (c) 2013 The United States Pharmacopeial Convention. All rights reserved.

Change to read:

DENSITY DETERMINATION

Because of the tendency of oral liquids to entrain air when ▪shaken or▪2S (USP36) transferred, a more accurate method for determining the delivered volume is to first determine the delivered mass, and then, using the density of the material, to convert the mass to delivered volume. In order to do that, a determination of the ▪▪2S (USP36) density of the material is required. The following is one method to determine ▪▪2S (USP36) density:

1. Tare a 100-mL volumetric flask containing 50.0 mL of water.
2. Add approximately 25 g of well-shaken product, and gently swirl the contents to mix.
3. Reweigh the flask.
4. From a buret, add an accurately measured amount of water to bring the flask contents to volume while gently swirling the contents of the flask. Record the volume taken from the buret.
5. Calculate the density of the sample:

$$W/V$$

in which W is the weight, in g, of the material taken; and V is 50.0 mL minus the volume, in mL, of water necessary to adjust the contents of the flask to volume. Other methods to determine the ▪▪2S (USP36) density may be employed depending on the formulation (e.g., substantially nonaqueous formulations).

Change to read:

TEST PREPARATIONS

For the determination of deliverable volume, select NLT 30 containers, and proceed as follows for the dosage form designated.

Oral Solutions ▪and▪2S (USP36)Oral Suspensions▪▪2S (USP36)—Shake the contents of 10 containers individually.

Powders That Are Labeled to State the Volume of Oral Liquid That Results When the Powder Is Constituted with the Volume of Diluent Stated in the Labeling—Constitute 10 containers with the volume of diluent stated in the labeling, accurately measured, and shake individually.

Change to read:

PROCEDURE

The deliverable volume can be determined ▪by weight▪2S (USP36) as follows:

1. Discharge the container contents into a suitable tared container (allowing drainage for NMT 5 s for single-dose containers and NMT ▪10▪2S (USP36) min for multiple-unit containers).
2. Determine the mass of the contents.
3. Calculate the volume using the ▪▪2S (USP36) density.

Alternatively, the following ▪by volume▪2S (USP36) procedure may be used:

1. ▪Under conditions of use or as instructed in the labeling, carefully discharge the contents of each container▪2S (USP36) into separate dry graduated cylinders of a rated capacity not exceeding two and a half times the volume to be measured, and calibrated "to contain" (see *Volumetric Apparatus* ⟨31⟩). ▪Care must be taken to avoid the formation of air bubbles during the process. In the absence of labeling instructions, support the containers at about a 30° angle to the horizontal, and gently discharge the contents into the graduated cylinder.▪2S (USP36)
2. Allow each container to drain for a period not to exceed ▪10▪2S (USP36) min for multiple-unit containers and 5 s for single-unit containers, unless otherwise specified in the monograph.
3. When free from bubbles, measure the volume of each mixture.

ACCEPTANCE CRITERIA

Use the following criteria to determine compliance with this test.

For Multiple-Unit Containers (see *Figure 1*)—The average volume of liquid obtained from the 10 containers is NLT 100%, and the volume of no container is less than 95% of the volume declared in the labeling. If A, the average volume is less than 100% of that declared in the labeling, but the volume of no container is less than 95% of the labeled amount, or if B, the average volume is NLT 100% and the volume of NMT 1 container is less than 95%, but is NLT 90% of the labeled volume, perform the test on 20 additional containers. The average volume of liquid obtained from the 30 containers is NLT 100% of the volume declared in the labeling; and the volume of liquid obtained from NMT 1 of the 30 containers is less than 95%, but NLT 90% of that declared in the labeling.

Accessed from 167.78.4.19 by James Cumbie (ocean22) on Mon Sep 09 15:04:23 EDT 2013

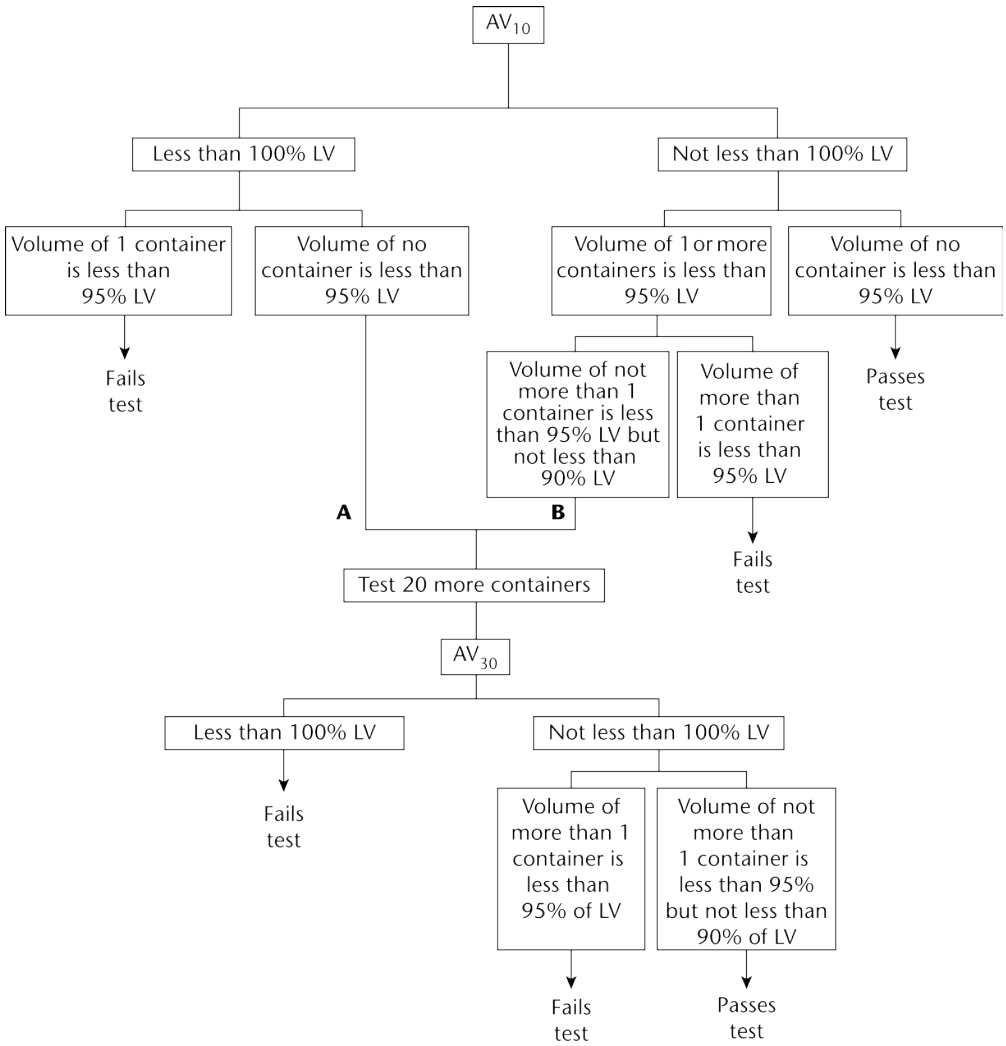

Figure 1. Decision scheme for multiple-unit containers. (AV = Average volume. LV = Labeled volume)

For Single-Unit Containers (see *Figure 2*)—The average volume of liquid obtained from the 10 containers is not less than 100%, and the volume of each of the 10 containers lies within the range of 95% to 110% of the volume declared in the labeling. If A, the average volume is less than 100% of that declared in the labeling, but the volume of no container is outside the range of 95% to 110%, or if B, the average volume is not less than 100% and the volume of not more than 1 container is outside the range of 95% to 110%, but within the range of 90% to 115%, perform the test on 20 additional containers. The average volume of liquid obtained from the 30 containers is not less than 100% of the volume declared in the labeling; and the volume obtained from not more than 1 of the 30 containers is outside the range of 95% to 110%, but within the range of 90% to 115% of the volume declared on the labeling.

Copyright (c) 2013 The United States Pharmacopeial Convention. All rights reserved.

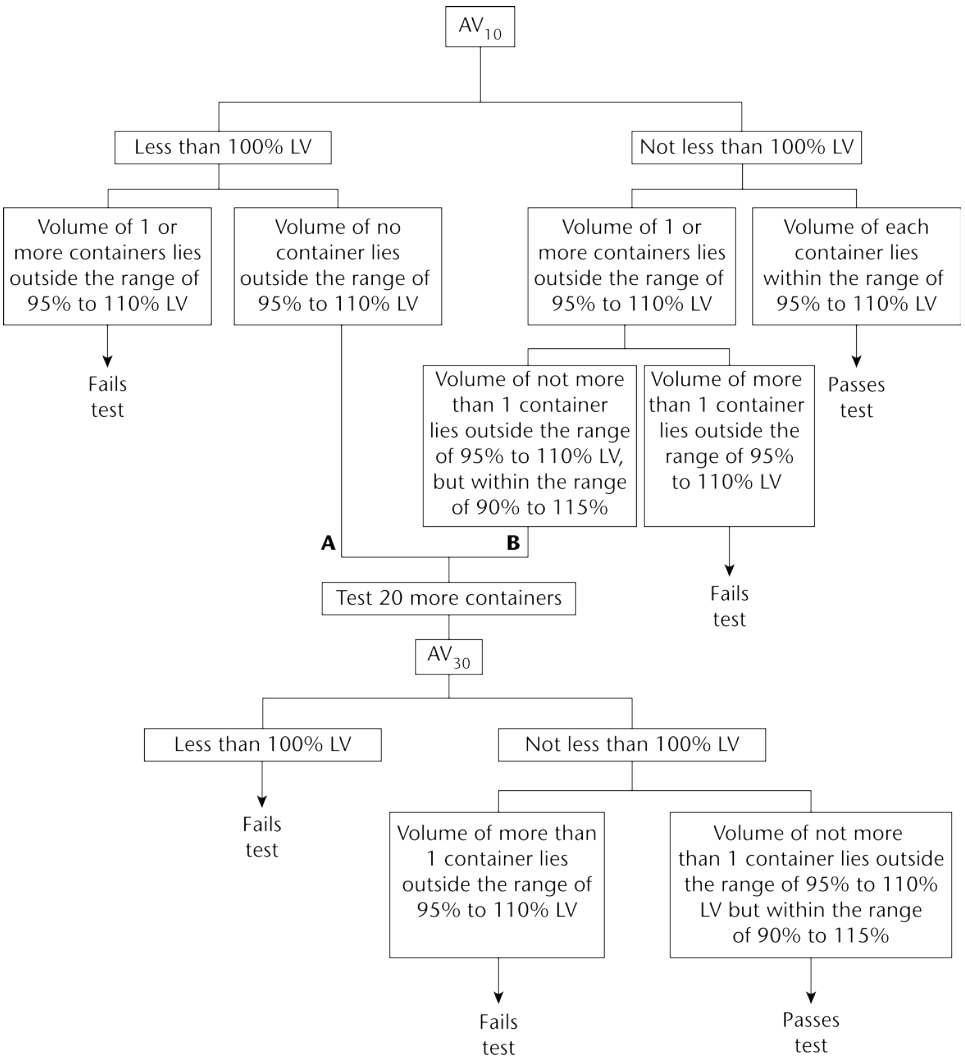

Figure 2. Decision scheme for single-unit containers. (AV = Average volume. LV = Labeled volume)

⟨699⟩ DENSITY OF SOLIDS

TERMS AND DEFINITIONS

Density refers to the average spatial distribution of mass in a material. The density of solids typically is expressed in g per cm^3, in contrast to fluids, where the density is commonly expressed in g per mL at a stated reference temperature.

The density of a solid particle can assume different values depending on the method used to measure the volume of the particle. It is useful to distinguish among three different possibilities.

The *true density* of a substance is the average mass per unit volume, exclusive of all voids that are not a fundamental part of the molecular packing arrangement. It is a property of a particular material, and hence should be independent of the method of determination. The true density of a perfect crystal can be determined from the size and composition of the unit cell.

The *pycnometric density*, as measured by gas pycnometry, is a convenient density measurement for pharmaceutical powders. In a gas pycnometer, the volume occupied by a known mass of powder is determined by measuring the volume of gas displaced by the powder. The quotient of the mass and volume is the pycnometric density. The pycnometric density equals the true density unless the material contains impenetrable voids, or sealed pores, that are inaccessible to the gas used in the pycnometer.

The *granular density* includes contributions to particle volume from open pores smaller than some limiting size. The size limit depends on the method of measurement. A common measurement technique is mercury porosimetry, where the limiting pore size

Accessed from 167.78.4.19 by James Cumbie (ocean22) on Mon Sep 09 15:04:23 EDT 2013

depends upon the maximum intrusion pressure. Because of the additional contribution from pore volume, the granular density will never be greater than the true density. A related concept is the *aerodynamic density*, which is the density of the particle with a volume defined by the aerodynamic envelope of the particle in a flowing stream. Both the closed and open pores contribute to this volume, but the open pores fill with the permeating fluid. The aerodynamic density, therefore, depends on the density of the test fluid if the particle is porous.

For brevity, the pycnometric density and the true density are both referred to as density. If needed, these quantities may be distinguished based on the method of measurement.

The density of a material depends on the molecular packing. For gases and liquids, the density will depend only on temperature and pressure. For solids, the density will also vary with the crystal structure and degree of crystallinity. If the solids are amorphous, the density may further depend upon the history of preparation and treatment. Therefore, unlike fluids, the densities of two chemically equivalent solids may be different, and this difference reflects a difference in solid-state structure. The density of constituent particles is an important physical characteristic of pharmaceutical powders.

Beyond these definitions of particle density, the *bulk density* of a powder includes the contribution of interparticulate void volume. Hence, the bulk density depends on both the density of powder particles and the packing of powder particles.

GAS PYCNOMETRY FOR THE MEASUREMENT OF DENSITY

Gas pycnometry is a convenient and suitable method for the measurement of the density of powder particles. A simple schematic of one type of gas pycnometer is shown in *Figure 1*.

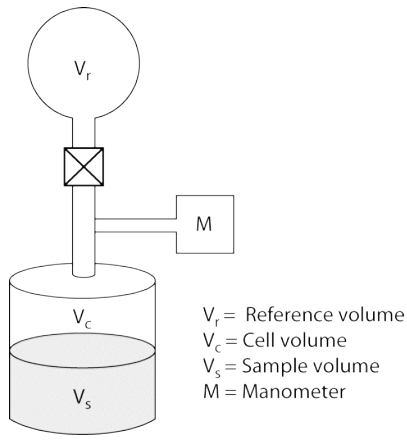

Figure 1. Schematic of gas pycnometer.

The sample, with mass w and volume V_s, is placed inside a sealed test cell with an empty cell volume of V_c. The system reference pressure, P_r, is determined at the manometer while the valve that connects the reference volume with the test cell is open. The valve is closed to separate the reference volume, V_r, from the test cell. The test cell is pressurized with the measurement gas to an initial pressure, P_i. Then the valve is opened to connect the reference volume, V_r, with the test cell, and the pressure drops to the final pressure, P_f. If the measurement gas behaves ideally under the conditions of measurement, the sample volume, V_s, is given by the following expression:

$$V_S = V_C - \frac{V_r}{\left[\dfrac{P_i - P_r}{P_f - P_r}\right] - 1} \qquad (1)$$

The density, ρ, is given by the equation:

$$\rho = \frac{w}{V_s} \qquad (2)$$

Details of the instrumental design may differ, but all gas pycnometers rely on the measurement of pressure changes as a reference volume is added to, or deleted from, the test cell.

The measured density is a volume-weighted average of the densities of individual powder particles. The density will be in error if the test gas sorbs onto the powder or if volatile contaminants are evolved from the powder during the measurement. Sorption is prevented by an appropriate choice of test gas. Helium is the common choice. Volatile contaminants in the powder are removed by degassing the powder under a constant purge of helium prior to the measurement. Occasionally, powders may have to be degassed under vacuum. Two consecutive readings should yield sample volumes that are equal within 0.2% if volatile contaminants are not interfering with the measurements. Because volatiles may be evolved during the measurement, the weight of the sample should be taken after the pycnometric measurement of volume.

Copyright (c) 2013 The United States Pharmacopeial Convention. All rights reserved.

Method

Ensure that the reference volume and the calibration volume have been determined for the gas pycnometer by an appropriate calibration procedure. The test gas is helium, unless another gas is specified in the individual monograph. The temperature of the gas pycnometer should be between 15° and 30° and should not vary by more than 2° during the course of the measurement. Load the test cell with the substance under examination that has been prepared according to the individual monograph. Where ⟨699D⟩ is indicated, dry the substance under examination as directed for *Loss on drying* in the monograph unless other drying conditions are specified in the monograph *Density of solids* test. Where ⟨699U⟩ is indicated, the substance under examination is used without drying. Use a quantity of powder recommended in the operating manual for the pycnometer. Seal the test cell in the pycnometer, and purge the pycnometer system with the test gas according to the procedure given in the manufacturer's operating instructions. If the sample must be degassed under vacuum, follow the recommendations in the individual monographs and the instructions in the operating manual for the pycnometer.

The measurement sequence above describes the procedure for the gas pycnometer shown in *Figure 1*. If the pycnometer differs in operation or in construction from the one shown in *Figure 1*, follow the operating procedure given in the manual for the pycnometer.

Repeat the measurement sequence for the same powder sample until consecutive measurements of the sample volume, V_s, agree to within 0.2%. Unload the test cell and measure the final powder weight, w. Calculate the pycnometric density, ρ, of the sample according to *Equation 2*.

⟨721⟩ DISTILLING RANGE

To determine the range of temperatures within which an official liquid distills, or the percentage of the material that distills between two specified temperatures, use Method I or Method II as directed in the individual monograph. The *lower limit* of the range is the temperature indicated by the thermometer when the first drop of condensate leaves the tip of the condenser, and the *upper limit* is the Dry Point, i.e., the temperature at which the last drop of liquid evaporates from the lowest point in the distillation flask, without regard to any liquid remaining on the side of the flask, or the temperature observed when the proportion specified in the individual monograph has been collected.

NOTE—Cool all liquids that distill below 80° to between 10° and 15° before measuring the sample to be distilled.

Method I

Apparatus—Use apparatus similar to that specified for *Method II*, except that the distilling flask is of 50- to 60-mL capacity, and the neck of the flask is 10 to 12 cm long and 14 to 16 mm in internal diameter. The perforation in the upper insulating board, if one is used, should be such that when the flask is set into it, the portion of the flask below the upper surface of the insulating material has a capacity of 3 to 4 mL.

Procedure—Proceed as directed for *Method II*, but place in the flask only 25 mL of the liquid to be tested.

Method II

Apparatus—Use an apparatus consisting of the following parts:

Distilling Flask—A round-bottom distilling flask, of heat-resistant glass, of 200-mL capacity, and having a total length of 17 to 19 cm, and an inside neck diameter of 20 to 22 mm. Attached about midway on the neck, approximately 12 cm from the bottom of the flask, is a side-arm 10 to 12 cm long and 5 mm in internal diameter, which forms an angle of 70° to 75° with the lower portion of the neck.

Condenser—A straight glass condenser 55 to 60 cm in length with a water jacket about 40 cm in length, or a condenser of other design having equivalent condensing capacity. The lower end of the condenser may be bent to provide a delivery tube, or it may be connected to a bent adapter that serves as a delivery tube.

Insulating Boards—Two pieces of insulating board, 5 to 7 mm thick and 14 to 16 cm square, suitable for confining the heat to the lower part of the flask. Each board has a hole in its center, and the two boards differ only with respect to the diameter of the hole, i.e., the diameters are 4 cm and 10 cm, respectively. In use, the boards are placed one upon the other, and rest on a tripod or other suitable support, with the board having the larger hole on top.

Receiver—A 100-mL cylinder graduated in 1-mL subdivisions.

Thermometer—In order to avoid the necessity for an emergent stem correction, an accurately standardized, partial-immersion thermometer having the smallest practical subdivisions (not greater than 0.2°) is recommended. Suitable thermometers are available as the ASTM E-1 series 37C through 41C, and 102C through 107C (see *Thermometers* ⟨21⟩). When placed in position, the stem is located in the center of the neck, and the top of the contraction chamber (or bulb, if 37C or 38C is used) is level with the bottom of the outlet to the side-arm.

Accessed from 167.78.4.19 by James Cumbie (ocean22) on Mon Sep 09 15:04:23 EDT 2013

Heat Source—A small Bunsen burner or an electric heater or mantle capable of adjustment comparable to that possible with a Bunsen burner.

Procedure—Assemble the apparatus, and place in the flask 100 mL of the liquid to be tested, taking care not to allow any of the liquid to enter the side-arm. Insert the thermometer, shield the entire burner and flask assembly from external air currents, and apply heat, regulating it so that between 5 and 10 minutes elapse before the first drop of distillate falls from the condenser. Continue the distillation at a rate of 4 to 5 mL of distillate per minute, collecting the distillate in the receiver. Note the temperature when the first drop of distillate falls from the condenser, and again when the last drop of liquid evaporates from the bottom of the flask or when the specified percentage has distilled over. Unless otherwise specified in the individual monograph, apply when necessary the emergent stem correction and report the temperatures adjusting the barometric pressure by the following formula:

$$t = t_0 + [(t_0 10^{-4} + 0.033)(760 - p)]$$

in which t is the corrected boiling temperature, in Celsius scale; t_0 is the measured boiling temperature, in Celsius scale; and p is the barometric pressure at the time of measurement, in mm Hg.

⟨731⟩ LOSS ON DRYING

The procedure set forth in this chapter determines the amount of volatile matter of any kind that is driven off under the conditions specified. For substances appearing to contain water as the only volatile constituent, the procedure given in the chapter, *Water Determination* ⟨921⟩, is appropriate, and is specified in the individual monograph.

Unless otherwise directed in the individual monograph, conduct the determination on a 1- to 2-g test specimen. Mix the substance to be tested and, if it is in the form of large particles, reduce the particle size to about 2 mm by quickly crushing before weighing out the test specimen. Tare an appropriate glass-stoppered, shallow weighing bottle that has been dried for about 30 minutes under the same conditions to be employed in the determination and cooled to room temperature in a desiccator. Put the test specimen in the bottle, replace the cover, and accurately weigh the bottle and the contents. By gentle, sidewise shaking, distribute the test specimen as evenly as practicable to a depth of about 5 mm generally, and not more than 10 mm in the case of bulky materials. Place the loaded bottle in the drying chamber, removing the stopper and leaving it also in the chamber. Dry the test specimen at the temperature and for the time specified in the monograph. [NOTE—The temperature specified in the monograph is to be regarded as being within the range of ±2° of the stated figure.] When "dry to constant weight" is specified in a monograph, drying shall be continued until two consecutive weighings do not differ by more than 0.50 mg per g of substance taken, the second weighing following an additional hour of drying. Upon opening the chamber, close the bottle promptly, and allow it to come to room temperature in a desiccator before weighing.

If the substance melts at a lower temperature than that specified for the determination of *Loss on Drying*, maintain the bottle with its contents for 1 to 2 hours at a temperature 5° to 10° below the melting temperature, then dry at the specified temperature.

Where capsules are to be tested, use a portion of the mixed contents of not fewer than 4 capsules.

Where tablets are to be tested, use powder from not fewer than 4 tablets.

Where the individual monograph directs that loss on drying be determined by thermogravimetric analysis, a sensitive electrobalance is to be used.

Where drying in vacuum over a desiccant is directed in the individual monograph, a vacuum desiccator or a vacuum drying pistol, or other suitable vacuum drying apparatus, is to be used.

Where drying in a desiccator is specified, exercise particular care to ensure that the desiccant is kept fully effective by frequent replacement.

Where drying in a capillary-stoppered bottle[1] in vacuum is directed in the individual monograph, use a bottle or tube fitted with a stopper having a 225 ± 25-µm diameter capillary, and maintain the heating chamber at a pressure of 5 mm or less of mercury. At the end of the heating period, admit dry air to the heating chamber, remove the bottle, and with the capillary stopper still in place allow it to cool to room temperature in a desiccator before weighing.

⟨741⟩ MELTING RANGE OR TEMPERATURE

For Pharmacopeial purposes, the melting range, melting temperature, or melting point is defined as those points of temperature within which, or the point at which, the first detectable liquid phase is detected to the temperature at which no solid phase is apparent, except as defined otherwise for *Classes II* and *III* below. A melting transition may be instantaneous for a highly pure material, but usually a range is observed from the beginning to the end of the process. Factors influencing this transition include the sample size, the particle size, the efficiency of heat diffusion, and the heating rate, among other variables, that are controlled by procedure instructions. In some articles, the melting process is accompanied by simultaneous decomposition, which is visually

[1]Available as an "antibiotic moisture content flask" from Kimble-Kontes, 1022 Spruce St., Vineland, NJ 08362-1502.

Copyright (c) 2013 The United States Pharmacopeial Convention. All rights reserved.

evidenced as a side event like darkening of the material, charring, bubbling, or other incident. The visual impact of this side reaction frequently obscures the end of the melting process, which it may be impossible to accurately determine. In those circumstances, only the beginning of the melting can be accurately established; and it is to be reported as the melting temperature. The accuracy of the apparatus to be used as described below should be checked at suitable intervals by the use of one or more of the available USP Melting Point Reference Standards, preferably those that melt nearest the melting temperatures of the compounds being tested (see *USP Reference Standards* ⟨11⟩).

Eight procedures for the determination of melting range or temperature are given herein, varying in accordance with the nature of the substance. When no class is designated in the monograph, use the procedure for *Class Ia* for crystalline or amorphous substances and the procedure for *Class II* for waxy substances.

The procedure known as the mixed-melting point determination, whereby the melting range or temperature of a solid under test is compared with that of an intimate mixture of equal parts of the solid and an authentic specimen of it, e.g., the corresponding USP Reference Standard, if available, may be used as a confirmatory identification test. Agreement of the observations on the original and the mixture constitutes reliable evidence of chemical identity.

Apparatus I—An example of a suitable melting range *Apparatus I* consists of a glass container for a bath of transparent fluid, a suitable stirring device, an accurate thermometer (see *Thermometers* ⟨21⟩),* and a controlled source of heat. The bath fluid is selected with a view to the temperature required, but light paraffin is used generally and certain liquid silicones are well adapted to the higher temperature ranges. The fluid is deep enough to permit immersion of the thermometer to its specified immersion depth so that the bulb is still about 2 cm above the bottom of the bath. The heat may be supplied by an open flame or electrically. The capillary tube is about 10 cm long and 0.8 to 1.2 mm in internal diameter with walls 0.2 to 0.3 mm in thickness.

Apparatus II—An instrument may be used in the procedures for *Classes I*, *Ia*, and *Ib*. An example of a suitable melting range *Apparatus II* consists of a block of metal that may be heated at a controlled rate, its temperature being monitored by a sensor. The block accommodates the capillary tube containing the test substance and permits monitoring of the melting process, typically by means of a beam of light and a detector. The detector signal may be processed by a microcomputer to determine and display the melting point or range, or the detector signal may be plotted to allow visual estimation of the melting point or range.

Procedure for Class I, Apparatus I—Reduce the substance under test to a very fine powder, and, unless otherwise directed, render it anhydrous when it contains water of hydration by drying it at the temperature specified in the monograph, or, when the substance contains no water of hydration, dry it over a suitable desiccant for not less than 16 hours.

Charge a capillary glass tube, one end of which is sealed, with a sufficient amount of the dry powder to form a column in the bottom of the tube 2.5 to 3.5 mm high when packed down as closely as possible by moderate tapping on a solid surface.

Heat the bath until the temperature is about 30° below the expected melting point. Remove the thermometer, and quickly attach the capillary tube to the thermometer by wetting both with a drop of the liquid of the bath or otherwise, and adjust its height so that the material in the capillary is level with the thermometer bulb. Replace the thermometer, and continue the heating, with constant stirring, sufficiently to cause the temperature to rise at a rate of about 3° per minute. When the temperature is about 3° below the lower limit of the expected melting range, reduce the heating so that the temperature rises at a rate of about 1° to 2° per minute. Continue heating until melting is complete.

The temperature at which the column of the substance under test is observed to collapse definitely against the side of the tube at any point indicates the beginning of melting, and the temperature at which the test substance becomes liquid throughout corresponds to the end of melting or the melting point. The two temperatures fall within the limits of the melting range. If melting occurs with decomposition, the melting temperature corresponding to the beginning of the melting is within the range specified.

Procedure for Class Ia, Apparatus I—Prepare the test substance and charge the capillary as directed for *Class I, Apparatus I.* Heat the bath until the temperature is about 10° below the expected melting point and is rising at a rate of $1 \pm 0.5°$ per minute. Insert the capillary as directed under *Class I, Apparatus I* when the temperature is about 5° below the lower limit of the expected melting range, and continue heating until melting is complete. Record the melting range as directed for *Class I, Apparatus I.*

Procedure for Class Ib, Apparatus I—Place the test substance in a closed container and cool to 10°, or lower, for at least 2 hours. Without previous powdering, charge the cooled material into the capillary tube as directed for *Class I, Apparatus I*, then immediately place the charged tube in a vacuum desiccator and dry at a pressure not exceeding 20 mm of mercury for 3 hours. Immediately upon removal from the desiccator, fire-seal the open end of the tube, and as soon as practicable proceed with the determination of the melting range as follows: Heat the bath until a temperature $10 \pm 1°$ below the expected melting range is reached, then introduce the charged tube, and heat at a rate of rise of $3 \pm 0.5°$ per minute until melting is complete. Record the melting range as directed for *Class I, Apparatus I.*

If the particle size of the material is too large for the capillary, precool the test substance as directed above, then with as little pressure as possible gently crush the particles to fit the capillary, and immediately charge the tube.

Procedure for Class I, Apparatus II—Prepare the substance under test and charge the capillary tube as directed for *Class I, Apparatus I.* Operate the apparatus according to the manufacturer's instructions. Heat the block until the temperature is about 30° below the expected melting point. Insert the capillary tube into the heating block, and continue heating at a rate of temperature increase of about 1° to 2° per minute until melting is complete.

The temperature at which the detector signal first leaves its initial value indicates the beginning of melting, and the temperature at which the detector signal reaches its final value corresponds to the end of melting, or the melting point. The two temperatures fall within the limits of the melting range. If melting occurs with decomposition, the melting temperature corresponding to the beginning of the melting is within the range specified. In the event of dispute, only the melting range or temperature obtained as directed for *Class I, Apparatus I,* is definitive.

* ASTM Method E77 deals with "Verification and Calibration of Liquid-in-glass Thermometers."

Accessed from 167.78.4.19 by James Cumbie (ocean22) on Mon Sep 09 15:04:23 EDT 2013

Procedure for Class Ia, Apparatus II—Prepare the test substance and charge the capillary as directed for *Class I, Apparatus I*. Operate the apparatus according to the manufacturer's instructions. Heat the block until the temperature is about 10° below the expected melting point and is rising at a rate of 1 ± 0.5° per minute. Insert the capillary as directed under *Class I, Apparatus I* when the temperature is about 5° below the lower limit of the expected melting range, and continue heating until melting is complete. Record the melting range as directed for *Class I, Apparatus I*. If melting occurs with decomposition, the melting temperature corresponding to the beginning of the melting is within the range specified. In the event of dispute, only the melting range or temperature obtained as directed for *Class Ia, Apparatus I*, is definitive.

Procedure for Class Ib, Apparatus II—Place the test substance in a closed container and cool to 10°, or lower, for at least 2 hours. Without previous powdering, charge the cooled material into the capillary tube as directed for *Class I, Apparatus I*, then immediately place the charged tube in a vacuum desiccator, and dry at a pressure not exceeding 20 mm of mercury for 3 hours. Immediately upon removal from the desiccator, fire-seal the open end of the tube, and as soon as practicable proceed with the determination of the melting range as follows: operate the apparatus according to the manufacturer's instructions. Heat the block until the temperature is about 10 ± 1° below the expected melting range, then introduce the charged tube, and heat at a rate of rise of 3 ± 0.5° per minute until melting is complete. Record the melting range as directed for *Class I, Apparatus I*.

If the particle size of the material is too large for the capillary, precool the test substance as directed above, then with as little pressure as possible gently crush the particles to fit the capillary, and immediately charge the tube. In the event of dispute, only the melting range or temperature obtained as directed for *Class Ib, Apparatus I*, is definitive.

Procedure for Class II—Carefully melt the material to be tested at as low a temperature as possible, and draw it into a capillary tube, which is left open at both ends, to a depth of about 10 mm. Cool the charged tube at 10°, or lower, for 24 hours, or in contact with ice for at least 2 hours. Then attach the tube to the thermometer by suitable means, adjust it in a water bath so that the upper edge of the material is 10 mm below the water level, and heat as directed for *Class I, Apparatus I* except, within 5° of the expected melting temperature, to regulate the rate of rise of temperature to 0.5° to 1.0° per minute. The temperature at which the material is observed to rise in the capillary tube is the melting temperature.

Procedure for Class III—Melt a quantity of the test substance slowly, while stirring, until it reaches a temperature of 90° to 92°. Remove the source of the heat, and allow the molten substance to cool to a temperature of 8° to 10° above the expected melting point. Chill the bulb of a suitable thermometer (see *Thermometers* ⟨21⟩) to 5°, wipe it dry, and while it is still cold dip it into the molten substance so that approximately the lower half of the bulb is submerged. Withdraw it immediately, and hold it vertically away from the heat until the wax surface dulls, then dip it for 5 minutes into a water bath having a temperature not higher than 16°.

Fix the thermometer securely in a test tube so that the lower point is 15 mm above the bottom of the test tube. Suspend the test tube in a water bath adjusted to about 16°, and raise the temperature of the bath at the rate of 2° per minute to 30°, then change to a rate of 1° per minute, and note the temperature at which the first drop of melted substance leaves the thermometer. Repeat the determination twice on a freshly melted portion of the test substance. If the variation of three determinations is less than 1°, take the average of the three as the melting point. If the variation of three determinations is 1° or greater than 1°, make two additional determinations and take the average of the five.

⟨785⟩ OSMOLALITY AND OSMOLARITY

INTRODUCTION

Osmotic pressure plays a critical role in all biological processes that involve diffusion of solutes or transfer of fluids through membranes. Osmosis occurs when solvent but not solute molecules cross a semipermeable membrane from regions of lower to higher concentrations to produce equilibrium. The knowledge of osmotic pressures is important for practitioners in determining whether a parenteral solution is hypo-osmotic, iso-osmotic, or hyperosmotic. A quantitative measure of osmotic pressure facilitates the dilution required to render a solution iso-osmotic relative to whole blood.

OSMOTIC PRESSURE

The osmotic pressure of a solution depends on the number of particles in solution, and is therefore referred to as a colligative property. A particle can be a molecule or an ion or an aggregated species (e.g., a dimer) that can exist discretely in solution. A solution exhibits ideal behavior when no interaction occurs between solutes and solvent, except where solvent molecules are bound

Copyright (c) 2013 The United States Pharmacopeial Convention. All rights reserved.

to solutes by hydrogen bonding or coordinate covalency. For such a solution containing a nondissociating solute, the osmotic pressure (π) is directly proportional to its molality (number of moles of solute per kilogram of the solvent):

$$\pi = (\rho RT/1000)m,$$

where ρ is the density of the solvent at the temperature T (in the absolute scale); R is the universal gas constant; and m is the molality of the solution. For a real solution containing more than one solute, the osmotic pressure is given by the formula:

$$\pi = (\rho RT/1000)\Sigma\nu_i m_i \Phi_{m,i}$$

where ν_i is the number of particles formed by the dissociation of one molecule of the ith solute; $\nu_i = 1$ for nonionic (nondissociating) solutes; m_i is the molality of the ith solute; and $\Phi_{m,i}$ is the molal osmotic coefficient of the ith solute. The molal osmotic coefficient takes into account the deviation of a solution from ideal behavior. Its value depends upon the concentration of the solute(s) in solution, its chemical properties, and ionic characteristics. The value of the molal osmotic coefficient of a solute can be determined experimentally by measuring the freezing point depression at different molal concentrations. At concentrations of pharmaceutical interest, the value of the molal osmotic coefficient is less than one. The molal osmotic coefficient decreases with the increase in concentration of the solute *(Table 1)*.

OSMOLALITY

The osmolality of a solution ξ_m is given by

$$\xi_m = \Sigma\nu_i m_i \Phi_{m,i}.$$

The osmolality of a real solution corresponds to the molality of an ideal solution containing nondissociating solutes and is expressed in osmoles or milliosmoles per kilogram of solvent (Osmol per kg or mOsmol per kg, respectively), a unit that is similar to the molality of the solution. Thus, osmolality is a measure of the osmotic pressure exerted by a real solution across a semipermeable membrane. Like osmotic pressure, other colligative properties of a solution, such as vapor pressure lowering, boiling point elevation, and freezing point depression, are also directly related to the osmolality of the solution. Indeed, the osmolality of a solution is typically determined most accurately and conveniently by measuring freezing point depression (ΔT_f):

$$\Delta T_f = k_f \xi_m$$

where k_f is the molal cryoscopic constant, which is a property of the solvent. For water, the value of k_f is 1.860° per Osmol. That is, 1 Osmol of a solute added to 1 kg of water lowers the freezing point by 1.860°.

OSMOLARITY

Osmolarity of a solution is a theoretical quantity expressed in osmoles per L (Osmol per L) of a solution and is widely used in clinical practice because it expresses osmoles as a function of volume. Osmolarity cannot be measured but is calculated theoretically from the experimentally measured value of osmolality.

Sometimes, osmolarity (ξ_c) is calculated theoretically from the molar concentrations:

$$\xi_c = \Sigma\nu_i c_i$$

where ν_i is as defined above, and c_i is the molar concentration of the ith solute in solution. For example, the osmolarity of a solution prepared by dissolving 1 g of vancomycin in 100 mL of 0.9% sodium chloride solution can be calculated as follows:

$$[3 \times 10 \text{ g/L}/1449.25(\text{mol. wt. of vancomycin}) + 2 \times 9 \text{ g/L}/58.44(\text{mol. wt. of sodium chloride})] \times 1000 = 329 \text{ mOsmol/L}$$

The results suggest that the solution is slightly hyperosmotic because the osmolality of blood ranges between 285 and 310 mOsmol per kg. However, the solution is found to be hypo-osmotic and has an experimentally determined osmolality of 255 mOsmol per kg.[1] The example illustrates that osmolarity values calculated theoretically from the concentration of a solution should be interpreted cautiously and may not represent the osmotic properties of infusion solutions.

The discrepancy between theoretical (osmolarity) and experimental (osmolality) results is, in part, due to the fact that osmotic pressure is related to osmolality and not osmolarity. More significantly, the discrepancy between experimental results and the theoretical calculation is due to the fact that the osmotic pressure of a real solution is less than that of an ideal solution because of interactions between solute molecules or between solute and solvent molecules in a solution. Such interactions reduce the pressure exerted by solute molecules on a semipermeable membrane, reducing experimental values of osmolality compared to theoretical values. This difference is related to the molal osmotic coefficient ($\Phi_{m,i}$). The example also illustrates the importance of determining the osmolality of a solution experimentally, rather than calculating the value theoretically.

[1]Kastango, E.S. and Hadaway, L. *International Journal of Pharmaceutical Compounding 5,* (2001) 465-469.

Accessed from 167.78.4.19 by James Cumbie (ocean22) on Mon Sep 09 15:04:23 EDT 2013

MEASUREMENT OF OSMOLALITY

The osmolality of a solution is commonly determined by the measurement of the freezing point depression of the solution.

Apparatus—The apparatus, an osmometer for freezing point depression measurement, consists of the following: a means of cooling the container used for the measurement; a resistor sensitive to temperature (thermistor), with an appropriate current- or potential-difference measurement device that may be graduated in temperature change or in osmolality; and a means of mixing the sample.

Osmometers that measure the vapor pressures of solutions are less frequently employed. They require a smaller volume of specimen (generally about 5 µL), but the accuracy and precision of the resulting osmolality determination are comparable to those obtained by the use of osmometers that depend upon the observed freezing points of solutions.

Standard Solutions—Prepare *Standard Solutions* as specified in *Table 1,* as necessary.[2]

Table 1. Standard Solutions for Osmometer Calibration*

Standard Solutions (Weight in g of sodium chloride per kg of water)	Osmolality (mOsmol/kg) (ξ_m)	Molal Osmotic Coefficient ($\Phi_{m,NaCl}$)	Freezing Point Depression (°) ΔT_f
3.087	100	0.9463	0.186
6.260	200	0.9337	0.372
9.463	300	0.9264	0.558
12.684	400	0.9215	0.744
15.916	500	0.9180	0.930
19.147	600	0.9157	1.116
22.380	700	0.9140	1.302

*Adapted from the *European Pharmacopoeia,* 4th Edition, 2002, p. 50.

Test Solution—For a solid for injection, constitute with the appropriate diluent as specified in the instructions on the labeling. For solutions, use the sample as is. [NOTE—A solution can be diluted to bring it within the range of measurement of the osmometer, if necessary, but the results must be expressed as that of the diluted solution and must NOT be multiplied by a dilution factor to calculate the osmolality of the original solution, unless otherwise indicated in the monograph. The molal osmotic coefficient is a function of concentration. Therefore, it changes with dilution.]

Procedure—First, calibrate the instrument by the manufacturer's instructions. Confirm the instrument calibration with at least one solution from *Table 1* such that the osmolality of the *Standard Solution* lies within 50 mOsmol/kg of the expected value of the *Test Solution* or the center of the expected range of osmolality of the *Test Solution.* The instrument reading should be within ±4 mOsmol per kg from the *Standard Solution.* Introduce an appropriate volume of each *Standard Solution* into the measurement cell as in the manufacturer's instructions, and start the cooling system. Usually, the mixing device is programmed to operate at a temperature below the lowest temperature expected from the freezing point depression. The apparatus indicates when the equilibrium is attained. If necessary, calibrate the osmometer, using an appropriate adjustment device such that the reading corresponds to either the osmolality or freezing point depression value of the *Standard Solution* shown in *Table 1.* [NOTE—If the instrument reading indicates the freezing point depression, the osmolality can be derived by using the appropriate formula under *Osmolality.*] Repeat the procedure with each *Test Solution.* Read the osmolality of the *Test Solution* directly, or calculate it from the measured freezing point depression.

Assuming that the value of the osmotic coefficient is essentially the same whether the concentration is expressed in molality or molarity, the experimentally determined osmolality of a solution can be converted to osmolarity in the same manner in which the concentration of a solution is converted from molality to molarity. Unless a solution is very concentrated, the osmolarity of a solution (ξ_c) can be calculated from its experimentally determined osmolality (ξ_m):

$$\xi_c = 1000\xi_m / (1000 / \rho + \Sigma w_i \nu_i)$$

where w_i is the weight in g; and ν_i is the partial specific volume, in mL per g, of the ith solute. The partial specific volume of a solute is the change in volume of a solution when an additional 1 g of solute is dissolved in the solution. This volume can be determined by the measurement of densities of the solution before and after the addition of the solute. The partial specific volumes of salts are generally very small, around 0.1 mL per g. However, those of other solutes are generally higher. For example, the partial specific volumes of amino acids are in the range of 0.6–0.9 mL per g. It can be shown from the above equation correlating osmolarity with osmolality that,

$$\xi_c = \xi_m (\rho - c)$$

where ρ is the density of the solution, and c is the total solute concentration, both expressed in g per mL. Thus, alternatively, the osmolarity can also be calculated from experimentally determined osmolality from the measurement of density of the solution by a suitable method and the total weight of the solute, after correction for water content, dissolved per mL of the solution.

[2]Commercially available solutions for osmometer calibration, with osmolalities equal to or different from those listed in *Table 1* and standardized by methods traceable to NIST, may be used.

Copyright (c) 2013 The United States Pharmacopeial Convention. All rights reserved.

⟨788⟩ PARTICULATE MATTER IN INJECTIONS

Change to read:

This general chapter is harmonized with the corresponding texts of the *European Pharmacopoeia* and/or the *Japanese Pharmacopoeia*. These pharmacopeias have undertaken not to make any unilateral change to this harmonized chapter. Portions of the present general chapter text that are national USP text, and therefore not part of the harmonized text, are marked with symbols (◆◆) to specify this fact.

Particulate matter in injections and parenteral infusions consists of extraneous mobile undissolved particles, other than gas bubbles, unintentionally present in the solutions.

◆As stated in *Injections* ⟨1⟩, solutions for injection administered by the intramuscular or subcutaneous route must meet the requirements of *Particulate Matter in Injections* ⟨788⟩. This requirement has been indefinitely postponed for products for veterinary use. Parenterals packaged and labeled exclusively for use as irrigating solutions are exempt from the requirements of *Particulate Matter in Injections* ⟨788⟩. Radiopharmaceutical preparations are exempt from the requirements of *Particulate Matter in Injections* ⟨788⟩. Parenteral products for which the labeling specifies use of a final filter prior to administration are exempt from the requirements of *Particulate Matter in Injections* ⟨788⟩, provided that scientific data are available to justify this exemption.◆

For the determination of particulate matter, two procedures, *Method 1 (Light Obscuration Particle Count Test)* and *Method 2 (Microscopic Particle Count Test)*, are specified hereinafter. When examining injections and parenteral infusions for subvisible particles, *Method 1* is preferably applied. However, it may be necessary to test some preparations by the *Light Obscuration Particle Count Test* followed by the *Microscopic Particle Count Test* to reach a conclusion on conformance to the requirements.

Not all parenteral preparations can be examined for subvisible particles by one or both of these methods. When *Method 1* is not applicable, e.g., in the case of preparations having reduced clarity or increased viscosity, the test should be carried out according to *Method 2*. Emulsions, colloids, and liposomal preparations are examples. Similarly, products that produce air or gas bubbles when drawn into the sensor may also require microscopic particle count testing. If the viscosity of the preparation to be tested is sufficiently high so as to preclude its examination by either test method, a quantitative dilution with an appropriate diluent may be made to decrease viscosity, as necessary, to allow the analysis to be performed.

The results obtained in examining a discrete unit or group of units for particulate matter cannot be extrapolated with certainty to other units that remain untested. Thus, statistically sound sampling plans must be developed if valid inferences are to be drawn from observed data to characterize the level of particulate matter in a large group of units.

●◆For the purpose of this chapter, small-volume parenteral is synonymous with small-volume injection, and large-volume parenteral is synonymous with large-volume injection.◆● (RB 1-Jul-2012)

Change to read:

METHOD 1 LIGHT OBSCURATION PARTICLE COUNT TEST

Use a suitable apparatus based on the principle of light blockage that allows for an automatic determination of the size of particles and the number of particles according to size. The definition for *particle-free water* is provided in *Reagents, Indicators, and Solutions—Reagent Specifications*.

The apparatus is calibrated using dispersions of spherical particles of known sizes between 10 µm and 25 µm. These standard particles are dispersed in *particle-free water*. Care must be taken to avoid aggregation of particles during dispersion. ◆System suitability can be verified by using the USP Particle Count RS.◆

General Precautions

The test is carried out under conditions limiting particulate matter, preferably in a laminar flow cabinet.

Very carefully wash the glassware and filtration equipment used, except for the membrane filters, with a warm detergent solution, and rinse with abundant amounts of water to remove all traces of detergent. Immediately before use, rinse the equipment from top to bottom, outside and then inside, with *particle-free water*.

Take care not to introduce air bubbles into the preparation to be examined, especially when fractions of the preparation are being transferred to the container in which the determination is to be carried out.

In order to check that the environment is suitable for the test, that the glassware is properly cleaned, and that the water to be used is particle-free, the following test is carried out. Determine the particulate matter in five samples of *particle-free water*, each of 5 mL, according to the method described below. If the number of particles of 10 µm or greater size exceeds 25 for the combined 25 mL, the precautions taken for the test are not sufficient. The preparatory steps must be repeated until the environment, glassware, and water are suitable for the test.

Accessed from 167.78.4.19 by James Cumbie (ocean22) on Mon Sep 09 15:04:23 EDT 2013

Method

Mix the contents of the sample by slowly inverting the container 20 times successively. If necessary, cautiously remove the sealing closure. Clean the outer surfaces of the container opening using a jet of *particle-free water*, and remove the closure, avoiding any contamination of the contents. Eliminate gas bubbles by appropriate measures such as allowing to stand for 2 min or sonicating.

For large-volume parenterals, single units are tested. For small-volume parenterals less than 25 mL in volume, the contents of 10 or more units are combined in a cleaned container to obtain a volume of NLT 25 mL; the test solution may be prepared by mixing the contents of a suitable number of vials and diluting to 25 mL with *particle-free water* or with an appropriate particle-free solvent when *particle-free water* is not suitable. Small-volume parenterals having a volume of 25 mL or more may be tested individually.

Powders for parenteral use are reconstituted with *particle-free water* or with an appropriate particle-free solvent when *particle-free water* is not suitable.

•◆ For pharmacy bulk packages for parenteral use labeled "Not for Direct Infusion", proceed as directed for small-volume parenterals when the volume is 25 mL or more. Calculate the test result on a portion that is equivalent to the maximum dose given in the labeling. For example, if the total bulk package volume is 100 mL and the maximum dose volume is 10 mL, then the average particle count per mL would be multiplied by 10 to obtain the test result based on the 10-mL maximum dose. [NOTE—For the calculation of test results, consider this maximum dose portion to be equivalent to the contents of one full container.]

Products packaged with dual compartments meant to hold a drug product and a solvent should be prepared and tested as directed for large-volume parenterals or small-volume parenterals, depending on container volume. Mix each unit as directed in the labeling, activating and agitating to ensure thorough mixing of the separate components and drug dissolution.◆• *USP36*

The number of test specimens must be adequate to provide a statistically sound assessment. For large-volume parenterals or for small-volume parenterals having a volume of 25 mL or more, fewer than 10 units may be tested, using an appropriate sampling plan.

Remove four portions, NLT 5 mL each, and count the number of particles equal to or greater than 10 µm and 25 µm. Disregard the result obtained for the first portion, and calculate the mean number of particles for the preparation to be examined.

Evaluation

For preparations supplied in containers with a nominal volume of more than 100 mL, apply the criteria of *Test 1.A*.

For preparations supplied in containers with a nominal volume of less than 100 mL, apply the criteria of *Test 1.B*.

For preparations supplied in containers with a nominal volume of 100 mL, apply the criteria of *Test 1.B*. [NOTE—*Test 1.A* is used in the *Japanese Pharmacopoeia*.]

If the average number of particles exceeds the limits, test the preparation by the *Microscopic Particle Count Test*.

Test 1.A *(Solutions for parenteral infusion or solutions for injection supplied in containers with a nominal content of more than 100 mL)*—The preparation complies with the test if the average number of particles present in the units tested does not exceed 25 per mL equal to or greater than 10 µm and does not exceed 3 per mL equal to or greater than 25 µm.

Test 1.B *(Solutions for parenteral infusion or solutions for injection supplied in containers with a nominal content of less than 100 mL)*—The preparation complies with the test if the average number of particles present in the units tested does not exceed 6000 per container equal to or greater than 10 µm and does not exceed 600 per container equal to or greater than 25 µm.

METHOD 2 MICROSCOPIC PARTICLE COUNT TEST

Use a suitable binocular microscope, a filter assembly for retaining particulate matter, and a membrane filter for examination.

The microscope is adjusted to 100 ± 10 magnifications and is equipped with an ocular micrometer calibrated with an objective micrometer, a mechanical stage capable of holding and traversing the entire filtration area of the membrane filter, and two suitable illuminators to provide episcopic illumination in addition to oblique illumination.

The ocular micrometer is a circular diameter graticule (see *Figure 1*) and consists of a large circle divided by crosshairs into quadrants, transparent and black reference circles 10 µm and 25 µm in diameter at 100 magnifications, and a linear scale graduated in 10-µm increments. It is calibrated using a stage micrometer that is certified by either a domestic or international standard institution. A relative error of the linear scale of the graticule within ±2% is acceptable. The large circle is designated the graticule field of view (GFOV).

Copyright (c) 2013 The United States Pharmacopeial Convention. All rights reserved.

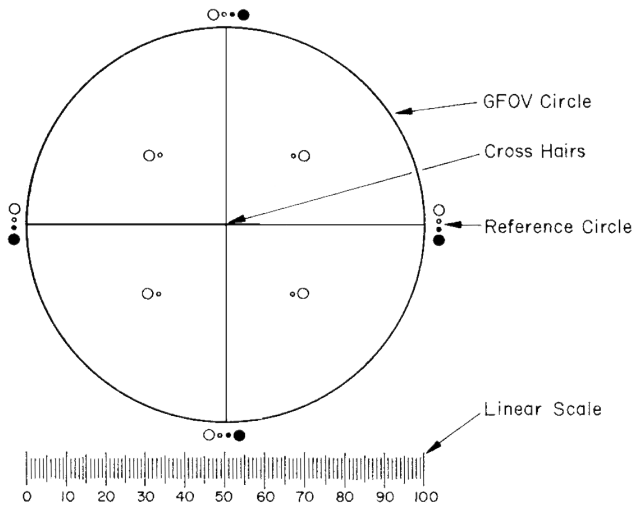

Figure 1. Circular diameter graticule. The large circle divided by crosshairs into quadrants is designated the graticule field of view (GFOV). Transparent and black circles having 10-µm and 25-µm diameters at 100× are provided as comparison scales for particle sizing.

Two illuminators are required. One is an episcopic brightfield illuminator internal to the microscope, the other is an external, focusable auxiliary illuminator that can be adjusted to give reflected oblique illumination at an angle of 10°–20°.

The filter assembly for retaining particulate matter consists of a filter holder made of glass or other suitable material, and is equipped with a vacuum source and a suitable membrane filter.

The membrane filter is of suitable size, black or dark gray in color, nongridded or gridded, and 1.0 µm or finer in nominal pore size.

General Precautions

The test is carried out under conditions limiting particulate matter, preferably in a laminar flow cabinet.

Very carefully wash the glassware and filter assembly used, except for the membrane filter, with a warm detergent solution, and rinse with abundant amounts of water to remove all traces of detergent. Immediately before use, rinse both sides of the membrane filter and the equipment from top to bottom, outside and then inside, with *particle-free water*.

In order to check that the environment is suitable for the test, that the glassware and the membrane filter are properly cleaned, and that the water to be used is particle-free, the following test is carried out. Determine the particulate matter of a 50-mL volume of *particle-free water* according to the method described below. If more than 20 particles 10 µm or larger in size or if more than five particles 25 µm or larger in size are present within the filtration area, the precautions taken for the test are not sufficient. The preparatory steps must be repeated until the environment, glassware, membrane filter, and water are suitable for the test.

Method

Mix the contents of the samples by slowly inverting the container 20 times successively. If necessary, cautiously remove the sealing closure. Clean the outer surfaces of the container opening using a jet of *particle-free water*, and remove the closure, avoiding any contamination of the contents.

For large-volume parenterals, single units are tested. For small-volume parenterals less than 25 mL in volume, the contents of 10 or more units are combined in a cleaned container; the test solution may be prepared by mixing the contents of a suitable number of vials and diluting to 25 mL with *particle-free water* or with an appropriate particle-free solvent when *particle-free water* is not suitable. Small-volume parenterals having a volume of 25 mL or more may be tested individually.

Powders for parenteral use are constituted with *particle-free water* or with an appropriate particle-free solvent when *particle-free water* is not suitable.

The number of test specimens must be adequate to provide a statistically sound assessment. For large-volume parenterals or for small-volume parenterals having a volume of 25 mL or more, fewer than 10 units may be tested, using an appropriate sampling plan.

Wet the inside of the filter holder fitted with the membrane filter with several mL of *particle-free water*. Transfer to the filtration funnel the total volume of a solution pool or of a single unit, and apply a vacuum. If needed, add stepwise a portion of the solution until the entire volume is filtered. After the last addition of solution, begin rinsing the inner walls of the filter holder by using a jet of *particle-free water*. Maintain the vacuum until the surface of the membrane filter is free from liquid. Place the membrane filter in a Petri dish, and allow the membrane filter to air-dry with the cover slightly ajar. After the membrane filter has been dried, place the Petri dish on the stage of the microscope, scan the entire membrane filter under the reflected light from the illuminating device, and count the number of particles that are equal to or greater than 10 µm and the number of particles that are equal to or greater than

Accessed from 167.78.4.19 by James Cumbie (ocean22) on Mon Sep 09 15:04:23 EDT 2013

25 µm. Alternatively, partial membrane filter count and determination of the total filter count by calculation is allowed. Calculate the mean number of particles for the preparation to be examined.

The particle sizing process with the use of the circular diameter graticule is carried out by estimating the equivalent diameter of the particle in comparison with the 10 µm and 25 µm reference circles on the graticule. Thereby the particles are not moved from their initial locations within the graticule field of view and are not superimposed on the reference circles for comparison. The inner diameter of the transparent graticule reference circles is used to size white and transparent particles, while dark particles are sized by using the outer diameter of the black opaque graticule reference circles.

In performing the *Microscopic Particle Count Test*, do not attempt to size or enumerate amorphous, semiliquid, or otherwise morphologically indistinct materials that have the appearance of a stain or discoloration on the membrane filter. These materials show little or no surface relief and present a gelatinous or film-like appearance. In such cases, the interpretation of enumeration may be aided by testing a sample of the solution by the *Light Obscuration Particle Count Test*.

Evaluation

For preparations supplied in containers with a nominal volume of more than 100 mL, apply the criteria of *Test 2.A*.

For preparations supplied in containers with a nominal volume of less than 100 mL, apply the criteria of *Test 2.B*.

For preparations supplied in containers with a nominal volume of 100 mL, apply the criteria of *Test 2.B*. [NOTE—*Test 2.A* is used in the *Japanese Pharmacopoeia*.]

Test 2.A *(Solutions for parenteral infusion or solutions for injection supplied in containers with a nominal content of more than 100 mL)*—The preparation complies with the test if the average number of particles present in the units tested does not exceed 12 per mL equal to or greater than 10 µm and does not exceed 2 per mL equal to or greater than 25 µm.

Test 2.B *(Solutions for parenteral infusion or solutions for injection supplied in containers with a nominal content of less than 100 mL)*—The preparation complies with the test if the average number of particles present in the units tested does not exceed 3000 per container equal to or greater than 10 µm and does not exceed 300 per container equal to or greater than 25 µm.

⟨791⟩ pH

For compendial purposes, pH is defined as the value given by a suitable, properly standardized, potentiometric instrument (pH meter) capable of reproducing pH values to 0.02 pH unit using an indicator electrode sensitive to hydrogen-ion activity, the glass electrode, and a suitable reference electrode. The instrument should be capable of sensing the potential across the electrode pair and, for pH standardization purposes, applying an adjustable potential to the circuit by manipulation of "standardization," "zero," "asymmetry," or "calibration" control, and should be able to control the change in millivolts per unit change in pH reading through a "temperature" and/or "slope" control. Measurements are made at 25 ± 2°, unless otherwise specified in the individual monograph or herein.

The pH scale is defined by the equation:

$$pH = pHs + (E - E_S)/k$$

in which E and E_S are the measured potentials where the galvanic cell contains the solution under test, represented by pH, and the appropriate *Buffer Solution for Standardization*, represented by pHs, respectively. The value of k is the change in potential per unit change in pH and is theoretically [0.05916 + 0.000198(t – 25°)] volts at any temperature t.

It should be emphasized that the definitions of pH, the pH scale, and the values assigned to the *Buffer Solutions for Standardization* are for the purpose of establishing a practical, operational system so that results may be compared between laboratories. The pH values thus measured do not correspond exactly to those obtained by the definition, $pH = -\log a_{H^+}$. So long as the solution being measured is sufficiently similar in composition to the buffer used for standardization, the operational pH corresponds fairly closely to the theoretical pH. Although no claim is made with respect to the suitability of the system for measuring hydrogen-ion activity or concentration, the values obtained are closely related to the activity of the hydrogen-ion in aqueous solutions.

Where a pH meter is standardized by use of an aqueous buffer and then used to measure the "pH" of a nonaqueous solution or suspension, the ionization constant of the acid or base, the dielectric constant of the medium, the liquid-junction potential (which may give rise to errors of approximately 1 pH unit), and the hydrogen-ion response of the glass electrode are all changed. For these reasons, the values so obtained with solutions that are only partially aqueous in character can be regarded only as apparent pH values.

Copyright (c) 2013 The United States Pharmacopeial Convention. All rights reserved.

BUFFER SOLUTIONS FOR STANDARDIZATION OF THE pH METER

Buffer Solutions for Standardization are to be prepared as directed in the accompanying table.* Buffer salts of requisite purity can be obtained from the National Institute of Science and Technology. Solutions may be stored in hard glass or polyethylene bottles fitted with a tight closure or carbon dioxide-absorbing tube (soda lime). Fresh solutions should be prepared at intervals not to exceed 3 months using carbon dioxide-free water. The table indicates the pH of the buffer solutions as a function of temperature. The instructions presented here are for the preparation of solutions having the designated molal (m) concentrations. For convenience, and to facilitate their preparation, however, instructions are given in terms of dilution to a 1000-mL volume rather than specifying the use of 1000 g of solvent, which is the basis of the molality system of solution concentration. The indicated quantities cannot be computed simply without additional information.

pH Values of Buffer Solutions for Standardization

Temperature, °C	Potassium Tetraoxalate, 0.05 m	Potassium Biphthalate, 0.05 m	Equimolal Phosphate, 0.05 m	Sodium Tetraborate, 0.01 m	Calcium Hydroxide, Saturated at 25°
10	1.67	4.00	6.92	9.33	13.00
15	1.67	4.00	6.90	9.28	12.81
20	1.68	4.00	6.88	9.23	12.63
25	1.68	4.01	6.86	9.18	12.45
30	1.68	4.02	6.85	9.14	12.29
35	1.69	4.02	6.84	9.10	12.13
40	1.69	4.04	6.84	9.07	11.98
45	1.70	4.05	6.83	9.04	11.84
50	1.71	4.06	6.83	9.01	11.71
55	1.72	4.08	6.83	8.99	11.57
60	1.72	4.09	6.84	8.96	11.45

Potassium Tetraoxalate, 0.05 m—Dissolve 12.61 g of $KH_3(C_2O_4)_2 \cdot 2H_2O$ in water to make 1000 mL.

Potassium Biphthalate, 0.05 m—Dissolve 10.12 g of $KHC_8H_4O_4$, previously dried at 110° for 1 hour, in water to make 1000 mL.

Equimolal Phosphate, 0.05 m—Dissolve 3.53 g of Na_2HPO_4 and 3.39 g of KH_2PO_4, each previously dried at 120° for 2 hours, in water to make 1000 mL.

Sodium Tetraborate, 0.01 m—Dissolve 3.80 g of $Na_2B_4O_7 \cdot 10H_2O$ in water to make 1000 mL. Protect from absorption of carbon dioxide.

Calcium Hydroxide, saturated at 25°—Shake an excess of calcium hydroxide with water, and decant at 25° before use. Protect from absorption of carbon dioxide.

Because of variations in the nature and operation of the available pH meters, it is not practicable to give universally applicable directions for the potentiometric determinations of pH. The general principles to be followed in carrying out the instructions provided for each instrument by its manufacturer are set forth in the following paragraphs. Examine the electrodes and, if present, the salt bridge prior to use. If necessary, replenish the salt bridge solution, and observe other precautions indicated by the instrument or electrode manufacturer.

To standardize the pH meter, select two *Buffer Solutions for Standardization* whose difference in pH does not exceed 4 units and such that the expected pH of the material under test falls between them. Fill the cell with one of the *Buffer Solutions for Standardization* at the temperature at which the test material is to be measured. Set the "temperature" control at the temperature of the solution, and adjust the calibration control to make the observed pH value identical with that tabulated. Rinse the electrodes and cell with several portions of the second *Buffer Solution for Standardization*, then fill the cell with it, at the same temperature as the material to be measured. The pH of the second buffer solution is within ±0.07 pH unit of the tabulated value. If a larger deviation is noted, examine the electrodes and, if they are faulty, replace them. Adjust the "slope" or "temperature" control to make the observed pH value identical with that tabulated. Repeat the standardization until both *Buffer Solutions for Standardization* give observed pH values within 0.02 pH unit of the tabulated value without further adjustment of the controls. When the system is functioning satisfactorily, rinse the electrodes and cell several times with a few portions of the test material, fill the cell with the test material, and read the pH value. Use carbon dioxide-free water (see *Water* in the section *Reagents, Indicators, and Solutions*) for solution or dilution of test material in pH determinations. In all pH measurements, allow a sufficient time for stabilization.

Where approximate pH values suffice, indicators and test papers (see *Indicators and Indicator Test Papers,* in the section *Reagents, Indicators, and Solutions*) may be suitable.

For a discussion of buffers, and for the composition of standard buffer solutions called for in compendial tests and assays, see *Buffer Solutions* in the section *Reagents, Indicators, and Solutions.*

* Commercially available buffer solutions for pH meter standardization, standardized by methods traceable to the National Institute of Standards and Technology (NIST), labeled with a pH value accurate to 0.01 pH unit may be used. For standardization solutions having a pH lower than 4, a labeled accuracy of 0.02 is acceptable. Solutions prepared from ACS reagent grade materials or other suitable materials, in the stated quantities, may be used provided the pH of the resultant solution is the same as that of the solution prepared from the NIST certified material.

Accessed from 167.78.4.19 by James Cumbie (ocean22) on Mon Sep 09 15:04:23 EDT 2013

⟨811⟩ POWDER FINENESS

The particle size distribution should be estimated by *Particle Size Distribution Estimation by Analytical Sieving* ⟨786⟩ or by application of other methods where practical. A simple descriptive classification of powder fineness is provided in this chapter. For practical reasons, sieves are commonly used to measure powder fineness. Sieving is most suitable where a majority of the particles are larger than about 75 µm, although it can be used for some powders having smaller particle sizes where the method can be validated. Light diffraction is also a widely used technique for measuring the size of a wide range of particles.

Classification of Powder Fineness—Where the cumulative distribution has been determined by analytical sieving or by application of other methods, powder fineness may be classified in the following manner:

x_{90} = particle dimension corresponding to 90% of the cumulative undersize distribution
x_{50} = median particle dimension (i.e., 50% of the particles are smaller and 50% of the particles are larger)
x_{10} = particle dimension corresponding to 10% of the cumulative undersize distribution

It is recognized that the symbol d is also widely used to designate these values. Therefore, the symbols d_{90}, d_{50}, and d_{10} may be used.

The following parameters may be defined based on the cumulative distribution. $Q_R(x)$ = cumulative distribution of particles with a dimension less than or equal to x where the subscript R reflects the distribution type.

R	**Distribution Type**
0	Number
1	Length
2	Area
3	Volume

Therefore, by definition:

1. $Q_R(x) = 0.90$ when $x = x_{90}$
2. $Q_R(x) = 0.50$ when $x = x_{50}$
3. $Q_R(x) = 0.10$ when $x = x_{10}$

An alternative but less informative method of classifying powder fineness is by use of the terms in the following table.

Classification of Powders by Fineness

Descriptive Term	**X_{50} (µm)**	**Cumulative Distribution by Volume Basis, $Q_3(x)$**
Coarse	>355	$Q_3(355) < 0.50$
Moderately Fine	180–355	$Q_3(180) < 0.50$ and $Q_3(355) \geq 0.50$
Fine	125–180	$Q_3(125) < 0.50$ and $Q_3(180) \geq 0.50$
Very Fine	≤125	$Q_3(125) \geq 0.50$

⟨823⟩ POSITRON EMISSION TOMOGRAPHY DRUGS FOR COMPOUNDING, INVESTIGATIONAL, AND RESEARCH USES

INTRODUCTION

Radionuclides used in positron emission tomography (PET) typically possess short physical half-lives, $T_{1/2}$ (e.g., $T_{1/2}$ of ^{15}O = 2.03 min, ^{62}Cu = 9.67 min, ^{13}N = 9.96 min, ^{11}C = 20.4 min, ^{68}Ga = 67.7 min, ^{18}F = 109.8 min, ^{64}Cu = 12.7 h). As a result, these radionuclides usually are produced using particle acceleration techniques (e.g., cyclotrons) or from generators, and then are processed into the final PET drug product in close proximity to the site where the PET procedure will be conducted.

The short half-lives of PET radionuclides create unique constraints for the preparation and testing of PET drug products. This chapter describes guidelines for making and testing PET drug products based on the following constraints:

- It is not possible to complete all testing before the use of PET drug products.
- An entire batch or sub-batch of a PET drug product may be contained in a single vial. Samples withdrawn for quality control (QC) testing are representative of the entire batch or sub-batch.
- An entire batch or sub-batch may be administered to a single patient.
- The mass of the PET drug in a PET drug product usually ranges from nanogram to microgram quantities.
- PET drug products do not enter a traditional drug distribution chain. Instead, PET drug products are used in-house or are delivered to the point of use by dedicated couriers.

Copyright (c) 2013 The United States Pharmacopeial Convention. All rights reserved.

- Small-scale facilities for the preparation of PET drug prodcuts have limited personnel and resources, which require the following:
  - — Allowance for multiple operations in one area with adequate controls;
  - — Allowance for the making and testing of multiple PET drug products using shared equipment;
  - — Appropriate requirements for aseptic operations;
  - — Appropriate requirements for system suitability and other day-of-use activities;
  - — QC requirements for components, materials, and supplies;
  - — Self-verification of significant steps in radionuclide production, PET drug production, or compounding and testing; and
  - — Single-person oversight of production and compounding, review of batch records, and release authorization.

The scope of this chapter includes the production and compounding of PET drug products for human administration as used (a) according to state-regulated practice of medicine and pharmacy, (b) according to an approved investigational new drug (IND) application (see 21 CFR 312), and (c) according to research uses under the supervision of a Radioactive Drug Research Committee (RDRC; see 21 CFR 361). The scope of this chapter does not include dispensing activities as defined in other USP general chapters.

DEFINITIONS

The following definitions apply to words and phrases as they are used in this chapter.

Batch: A quantity of PET drug product that is intended to have uniform character and quality, within specified limits, and that is made in a single operational cycle produced according to one or more production order(s).

Conditional Final Release: A final release for patient administration before completion of required tests because of a malfunction of analytical equipment.

Lot: A quantity of materials (e.g., reagents, solvents, gases, purification columns, and other auxiliary materials) that have uniform character and quality within specified limits and are used to make a PET drug product.

PET Drug: A radioactive substance (active pharmaceutical ingredient) that exhibits spontaneous disintegration of unstable nuclei by the emission of positrons and is incorporated into a PET drug product to furnish direct effect in the diagnosis or monitoring of a disease or a manifestation of a disease in humans, or monitoring treatment of disease or therapeutic procedures (e.g., tumor therapy).

PET Drug Product: A finished dosage form that contains a PET drug, whether or not in association with one or more other ingredients.

Compounding: The practice as described in the Food, Drug and Cosmetic Act (1997) Chapter II, Section 121 (a) (ii) (1) (B) of synthesizing or formulating a PET drug product, by or on the order of a practitioner who is licensed by a State to compound or order compounding for a PET drug product, and is compounded in accordance with that State's law, for a patient or for research, teaching, or quality control.

Line Clearance: The segregation and cleaning of different processing and work areas to avoid cross-contamination and mix-ups between the production and/or compounding of different PET drug products.

Manufacturer's Certification: Documentation, including, but not limited to, certificates of analysis, certificates of conformance, or certificates of quality obtained from the manufacturer, supplier, or vendor of a material or component that describes critical quality characteristics used to determine acceptability of use.

Out of Specification (OOS): A quality control test result for a PET drug product that does not conform to established acceptance criteria.

Production: The process of synthesis or formulation of a PET drug product including processing, packaging, labeling, reprocessing, and testing for investigational or research use.

Quality Assurance (QA): A planned system for ensuring that a PET drug product possesses defined identity, strength, quality, and purity required for its intended purpose by procedures, tests, and analytical methods.

Quality Control (QC): A system for testing the quality of components, materials, supplies, and PET drug products by procedures, tests, analytical methods, and acceptance criteria.

Specific Activity: The radioactivity of a radionuclide per unit mass of the element or compound. The unit of specific activity is radioactivity per mass expressed on a gram or mole basis (e.g., mCi/µg [MBq/µg], Ci/mmol [GBq/mmol]).

Strength: The radioactivity concentration of the PET drug in the PET drug product on a volume basis at the time of calibration. The unit of strength is the amount of radioactivity per volume at the time of calibration (e.g., mCi/mL [MBq/mL]).

Sub-batch: A quantity of PET drug product having uniform character and quality, within specified limits, that is produced during one succession of multiple irradiations using a given synthesis or purification operation. A group of sub-batches collectively form a batch that is intended to have uniform character and quality, within specified limits. Sub-batches may be required for PET drug products with very short-lived radionuclides (e.g., ^{13}N and ^{15}O) because QC tests cannot be completed before use.

Validation: Establishment of documented evidence that a method, process, or system meets its intended requirements.

Verification: Confirmation that an established method, process, or system meets predetermined acceptance criteria.

PERSONNEL

Sufficient numbers of personnel with the appropriate education, training, and experience are needed for the preparation and testing of PET drug products. The number depends on the size and complexity of the operations executed at each facility.

Training Requirements: Personnel should be trained before they begin to make and test PET drug products. Training can be performed by various methods, including live instruction, audio-video instruction, and study of publications. Training should address but is not limited to radionuclide production techniques, synthetic and purification methods, materials, components, reagents, stock solutions, automated and manual apparatus used to make PET drug products, and QC methods, including equipment, software, and documentation. Training must be documented.

Accessed from 167.78.4.19 by James Cumbie (ocean22) on Mon Sep 09 15:04:23 EDT 2013

Aseptic Operations Training: Training should address aseptic manipulations as well as the techniques and equipment used to achieve and maintain International Organization for Standardization (ISO) Class 5 environmental conditions. Training also should address all aseptic operations, including the assembly of sterile components, compounding, and filtration. Manipulations of sterile solutions should be performed by operators who are qualified to use aseptic techniques (see *Facilities and Equipment* below).

Personnel involved in aseptic operations should be evaluated periodically by aseptic simulations in which a microbiological growth medium is used to assess the quality of the aseptic operation. Aseptic simulations should provide the following:

- Include all manipulations required for the aseptic assembly of the PET drug product vial assembly (e.g., vial, filter, and syringe assembly, etc.).
- Represent worst-case scenarios for aseptic operations.
- Be performed in triplicate to qualify a new operator. Each operator should be requalified annually by conducting at least one media fill.
- Be performed any time procedures are changed significantly.

After the simulation process, the media should show the absence of contamination after incubation at a suitable temperature for 14 days. An operator who fails written assessments or whose aseptic simulations result in microbial growth should be immediately re-instructed and re-evaluated to ensure correction of aseptic practice deficiencies.

QUALITY ASSURANCE

QA is a broad concept that covers all matters that influence identity, strength, quality, and purity of a PET drug product. QC is a subset of QA that deals with testing of materials and PET drug products to determine if they meet acceptance criteria. The QA function typically consists of oversight activities, and the QC function consists of execution activities.

QC functions include the following.

- Evaluate each lot of incoming material to ensure that it meets its established specifications before use in the preparation or testing of PET drug products.
- Evaluate each batch of a PET drug product to ensure the batch meets its established specifications before authorizing the final release of the batch.

The oversight functions associated with QA include the following:

- Review completed batch records for accuracy and completeness.
- Approve procedures, specifications, processes, and methods.
- Ensure that personnel are properly trained and qualified, as appropriate.
- Ensure that PET drug products have adequately defined identity, strength, quality, and purity.
- Ensure that changes to component quality, suppliers, changes to production procedures, and changes to testing procedures and specifications are appropriate and implemented properly.
- Investigate errors and ensure that appropriate corrective and preventive actions are taken to prevent their recurrence.
- Handle complaints.
- Ensure that the PET drug products are produced, tested, labeled, released, and distributed according to the facility's established procedures and practices for PET drug products.
- Conduct periodic audits to monitor compliance with established procedures and practices for PET drug products.

Personnel at the facility may perform both QA and QC functions.

FACILITIES AND EQUIPMENT

Facilities should be adequate for the production, compounding, and testing of PET drug products. Work areas should be organized to prevent cross-contamination, mix-ups, and errors, especially in areas used for making multiple PET drug products. Work areas should be periodically cleaned to prevent the contamination of equipment, materials, components, or PET drug products by personnel or environmental conditions that could reasonably be expected to adversely affect PET drug product quality. These requirements should be described in written procedures, and their routine execution should be documented.

Environmental Controls for Parenteral PET Drug Products: Because the sterility test results for parenteral PET drug products are obtained after release, facilities and equipment should ensure a sterile PET drug product.

Aseptic Workstation—The primary environmental control for aseptic operations is a high-efficiency particulate air (HEPA) filter that is capable of producing air with a cleanliness rating of ISO Class 5. This can be achieved with a laminar airflow workstation, aseptic isolator, biological safety cabinet, or other suitable device (generically, aseptic workstations). The aseptic workstation should be protected from sources of microbial contamination and should be located in an area where personnel traffic is limited. The area around the aseptic workstation should not be used for storage of materials that shed large quantities of particulate matter (e.g., corrugated boxes).

The proper operation of the aseptic workstation must be certified by measurement of airborne particles, HEPA filter integrity testing, pressure differential testing, or other means. The specific tests depend on the type of aseptic workstation. Certification should be performed at the inception of operation and at least annually thereafter or after repair or replacement of the HEPA filter. These requirements supersede those in other USP general information chapters (e.g., *Microbiological Control and Monitoring of Aseptic Processing Environments* ⟨1116⟩).

The work area inside the aseptic workstation should be clean. The internal surfaces should allow easy cleaning and disinfection. The internal surfaces should be cleaned and disinfected with appropriate disinfectants that are sterile filtered or certified sterile with a manufacturer's certification.

Copyright (c) 2013 The United States Pharmacopeial Convention. All rights reserved.

Microbiological Testing—Microbiological testing of the environment should be performed to assess air quality and surface disinfection of the aseptic areas. This can be achieved by either settling plates or active air-sampling plates. Surface disinfection of critical surfaces (e.g., the work surface of the aseptic workstation or operators' fingers) should be assessed with swab or contact plates. For microbiological testing of the aseptic workstation, the air should be tested as part of the workstation qualification (e.g., every six months) and the surface (using swab or contact plates) should be assessed after use, each day of use. Nonviable particle counts may be determined less frequently following certification of the *Aseptic workstation* (see above).

Alert and action limits should be established for samples obtained during microbiological testing. Typical alert levels are set at less than three colony-forming units (cfu) per plate. More than three cfu require corrective actions that may include operator retraining, recertification of the aseptic workstation, or other actions. The results of microbiological testing also should be used in the investigation of positive sterility tests.

Equipment: Equipment used to make and test PET drug products should be appropriate for its intended purpose and should be installed, cleaned, and maintained in an appropriate manner. Equipment should be capable of producing consistent results.

The following requirements should be described in written procedures, and performance of these procedures should be documented.

1. *Installation of New Equipment*—Newly installed equipment should be qualified before it is used to make or test PET drug products at an appropriate level of detail based on complexity. All qualification activities should be properly documented, including the date and the name of the person who performed the qualification. For more complex equipment, qualification consists of three phases:
   - Installation Qualification (IQ)—IQ is a check of items required for proper installation of the equipment, including physical location, required utilities and supplies, communications, and environmental conditions. IQ should describe the installation procedure for the equipment.
   - Operational Qualification (OQ)—OQ is a check of operational specifications for the equipment, including equipment set-up, functional testing of subsystems, and proper overall operation. OQ should describe operational procedures for the equipment.
   - Performance Qualification (PQ)—PQ demonstrates that the equipment is capable of performing tasks required to make and test PET drug products in the operating environment and that the equipment provides the intended results. PQ should describe the required performance tasks for the equipment.
2. *Calibration of Equipment*—Analytical equipment calibration should be performed before use, as appropriate. A schedule should be developed for recalibration and should have a sufficient frequency to ensure accurate results. Calibration activities should be properly documented, including the date and the name of the person who performed the calibration.
3. *Preventive Maintenance of Equipment*—A preventive maintenance schedule should be developed for major production and testing equipment, including automated chemistry modules, gas chromatographs, high-performance liquid chromatographs, and others. The schedule should have a sufficient frequency to minimize equipment downtime. Major repairs may require recalibration and requalification. Preventative maintenance activities should be properly documented, including the date of such performance and the name of the person who performed them.

Cleaning Equipment and Components: Equipment used in production or compounding of PET drug products includes automated, computer-controlled devices, as well as manually operated apparatus. Before it is used in making PET drug products, equipment should be properly cleaned to ensure that the resulting PET drug product meets established specifications for identity, strength, quality, and purity (see *Controls and Acceptance Criteria for Finished PET Drug Products* below). Once cleaned, equipment should be maintained in a state of cleanliness before use.

Equipment may be used to make multiple batches of one or more PET drug products. Documented studies should demonstrate the effectiveness of the cleaning process between batches. All impurities should be controlled at levels that conform to established specifications for identity, strength, quality, and purity. Written procedures for line clearance between batches of different PET drug products should describe routine execution of cleaning processes.

Day-of-Use Checks: Day-of-use checks are necessary for processing equipment to ensure proper function. Written procedures for the day-of-use checks should be established and followed. These procedures should be designed to check key parameters at the beginning of each operational cycle (e.g., temperature, pressure integrity, gas supply, vacuum supply, proper delivery line selection, reagent delivery volumes, gas flow rates, radiation monitors, and other process sensors). Some parameters may be periodically checked as part of the calibration and preventive maintenance schedules as described above.

System Suitability for QC Equipment: System suitability tests are necessary for QC equipment to ensure that the equipment, components, and personnel (i.e., the system) function as a whole to execute the desired analytical method. System suitability tests should be performed prior to using the equipment according to established procedures. Written procedures should be established and followed for system suitability tests, and the test results should be documented.

The system suitability tests required for chromatographic methods include tailing factor, replicate injections, and resolution. When the test chromatogram used for system suitability contains only a single peak, then tailing factor, replicate injections, and column efficiency (theoretical plates) are adequate. The use of internal or external standards with a known concentration is necessary for these determinations. Standards should be prepared from well-characterized materials or from materials that have a manufacturer's certification. Two acceptable approaches that may be used for chromatographic methods are the following:

1. Create a calibration curve from a range of standards with known concentrations. The concentrations of the standards should bracket the conditions of use for the chromatographic method. The calibration curve should be used over a suitably specified period of time (e.g., six months), after which time a new one should be created. A new calibration curve should be created each time an alteration is made to the chromatographic system. Routine system suitability for replicate injections consists of a single injection of a known standard and a measurement of the concentration based on the calibration curve. If the measured concentration agrees with the known concentration within a predefined range (e.g., 10% for manual injections and 5% for automated injections), this demonstrates the suitability of the system for replicate injections and ensures that the calibration

Accessed from 167.78.4.19 by James Cumbie (ocean22) on Mon Sep 09 15:04:23 EDT 2013

curve is appropriate for use in subsequent sample injections. The tailing factor and resolution (or column efficiency, as appropriate) should be determined from the same chromatogram.

2. At the beginning of each testing cycle, create a single-point calibration from two injections of a known standard. The measured area of the peaks for these injections should agree within a predefined range (e.g., 10% for manual injections and 5% for automated injections). Then the results are averaged and used with the standard concentration to provide a calibration factor that is used in subsequent sample injections for that day. The tailing factor and resolution (or column efficiency as appropriate) should be determined from one of the two chromatograms.

Other chromatographic parameters such as signal-to-noise ratio, limit of detection, and limit of quantitation can be determined as part of routine system suitability testing.

System suitability tests also may be appropriate for other QC equipment, including dose calibrators, scanners for radio–thin layer chromatography (radio–TLC), and multichannel analyzers. When used, these tests should be performed at installation, relocation, and appropriate intervals thereafter. These tests should use known standards to demonstrate the proper function of the equipment, for example:

1. *Dose Calibrator*—Accuracy, geometry, and linearity should be assessed at installation and at appropriate intervals thereafter. The instrument should be calibrated in accordance with nationally recognized standards or the manufacturer's instructions. Routine system suitability testing should include a constancy check with a suitable high-energy radionuclide source.
2. *Radio–TLC Scanner*—Uniformity, positional accuracy, detector linearity, and resolution should be assessed with a suitable radionuclide source. Routine system suitability testing should include checks for these parameters.
3. *Multichannel Analyzer*—Sensitivity and resolution should be assessed at installation and at appropriate intervals thereafter. Routine system suitability testing should include a constancy check with a suitable high-energy radionuclide source.

CONTROL OF COMPONENTS, MATERIALS, AND SUPPLIES

Components, materials, and supplies that are used in the preparation of PET drug products should be controlled to avoid contamination, mix-ups, and errors. A designated person should be responsible for ensuring that these activities are carried out and completed properly. Records of completed examinations and tests for components, materials, and supplies should be maintained for one year after their expiration or for one year after batch release, whichever is longer. The following activities should be established and performed:

1. Establish written specifications for the identity, strength, quality, and purity of ingredients, reagents, target materials, and gases.
2. Establish written specifications for the identity and quality of sterile empty vials, transfer lines, sterile stopcocks, sterile needles, sterile membrane filters, and other components used in the PET drug product vial assembly.
3. Establish written specifications for the identity, strength, quality, and purity of analytical supplies (e.g., solvents, chromatography columns, and authentic standards), sterility test media, and endotoxin test reagents used in the testing of PET drug products.
4. Establish appropriate storage conditions (based on heat, light, humidity, and other factors) for components, materials, and supplies used to make and test PET drug products.
5. Store components, materials, and supplies in a controlled-access area according to established storage conditions. Segregate components, materials, and supplies as appropriate to avoid mix-ups and errors.
6. Log each lot of shipment of components, materials, and supplies, and record the date of receipt, quantity received, manufacturer, manufacturer's lot number, and expiration date. If no expiration date is designated by the manufacturer, assign one based on knowledge of its physical and chemical properties and previous experience with its use. For organic substrates and reagents that are potentially susceptible to degradation or to a change in composition, the expiration date should be based on the material's stability.
7. Determine that each lot of components, materials, and supplies complies with established written specifications. Compliance with specifications can be demonstrated by inspection of the labeling or inspection of the manufacturer's certification. The identity of each lot of components, materials, and supplies should be verified by defined procedures, tests, or documented manufacturer's certification, as appropriate. Perform an identity test for precursors (e.g., melting point determination or other appropriate tests). Alternatively, the manufacturer's certification can be used as the only acceptance criterion for a precursor if final testing of the PET drug product ensures that the correct precursor has been used. Reference standards used in chromatographic procedures should have suitable documentation of identity and purity. Other components can be accepted on the basis of a manufacturer's certification only.
8. Membrane filters used with parenteral PET drug products should have a manufacturer's certification. Examine the manufacturer's certification for each lot to ensure compliance with written specifications.
9. Media used in the sterility testing of PET drug products may be obtained from commercial sources. If the media is obtained from commercial sources, then growth-promotion testing that uses a suitable single species of organism should be performed on initial qualification of the supplier and periodically (e.g., quarterly) thereafter.

PROCESS AND OPERATIONAL CONTROLS

Process Controls: The following process controls should be established and summarized in a master formula for the PET drug product. A designated person should be responsible for ensuring that these activities are carried out and completed properly.

1. Written acceptance criteria for the identity, strength, quality, and purity of each PET drug product should be established. For PET drug products intended for parenteral administration, specifications should include sterility and bacterial endotoxins. If a

Copyright (c) 2013 The United States Pharmacopeial Convention. All rights reserved.

USP monograph exists or if there are specifications that have been previously accepted by the appropriate regulatory agency (e.g., FDA), then these standards, if applicable, may be applied as the minimum acceptance criteria.

2. Written procedures for the preparation of each PET drug product should provide the following:
   - Incorporate, for each PET drug product intended for parenteral administration, sterile membrane filtration (0.22 µm) or steam sterilization;
   - Incorporate, for each PET drug product intended for inhalation, particulate filtration (0.45 µm);
   - Describe routine cleaning procedures for equipment and facilities;
   - Describe components, materials, and supplies used to make PET drug products, including precursors, standards, reagents, stock solutions, and related items;
   - Describe the process and the steps used to make the PET drug product;
   - Describe the formulation process, including the use of stabilizers, buffers, and other agents;
   - Describe calculations performed for quantitative parameters associated with making and QC testing the PET drug product (e.g., including radiochemical yield, radiochemical purity, specific activity, solvent amounts, etc.);
   - Describe QC tests for the final PET drug product (see *Controls and Acceptance Criteria for Finished PET Drug Products* below), including a schedule that defines whether or not each test should be performed on each batch and that states if the test results should be complete at the time of release.
3. The quality of each batch of a PET drug product should be verified by full finished product testing prior to use to ensure the product meets all specifications.
4. In cases where testing as described in the previous paragraph is not possible or impractical, the quality of a PET drug product may also be ensured by documented validation studies in lieu of prerelease tests. Such studies should provide the following:
   - Demonstrate a consistent process that is suitable for the intended preparation of the PET drug product;
   - Be completed on three batches made according to the master formula, and all three batches should meet all acceptance criteria;
   - Include evaluation of radiochemical identity and purity, radionuclidic identity and purity, specific activity, sterility (for parenteral PET drug products), bacterial endotoxins (for parenteral PET drug products), pH, appearance, stereochemical purity (for applicable compounds), residual solvents, other toxic chemicals that may have been used during the synthesis or purification procedure, effective concentration of a stabilizer (if any), chemical purity of the PET drug product, and equivalence of initial and final sub-batches (see *Definitions* above);
   - Be repeated if the process and steps described in the master formula have been altered in a way that could change the identity, strength, quality, or purity of the PET drug product;
5. The processes and steps described in the master formula should be updated as needed and should be reviewed annually to ensure they are current. Prior to the implementation of updates, appropriate validation and/or verification should be approved and performed.

Appropriate controls of computer-controlled equipment should ensure that process changes are instituted only by authorized personnel and that such changes are documented and verified. Production, compounding, and test methods should be backed up and controlled to avoid accidental use of outdated methods. In the case of processes or test methods from a vendor that are used without alteration, it is acceptable to rely on vendor certification for software verification and proper operation.

Operational Controls: The following operational controls should be established and summarized in a batch record that is a subset of the master formula for the PET drug product. The batch record should adequately document the routine process for making the PET drug product. A designated person should be responsible for ensuring that these activities are carried out and completed properly. Completed batch records and associated documentation should be maintained for one year after batch release.

1. Execute suitable line clearance procedures to avoid mix-ups and cross-contamination, including the inspection of areas used to make and test PET drug products, and the inspection of all equipment for cleanliness and suitability before use. Remove extraneous materials and labels from these areas and equipment.
2. Ensure the correct identity, strength, quality, and purity of components, materials, and supplies used in the preparation of the PET drug product. Label components as appropriate for identity and traceability purposes.
3. Execute routine cleaning procedures for equipment and facilities.
4. Prepare the PET drug product according to the current master formula, and for each batch maintain a batch record. Batch records may consist of paper documents, electronic records, or combinations thereof. Spreadsheets and other electronic recordkeeping tools should be verified to ensure traceability, data integrity, accuracy of results for calculations, and so on. The batch record should include the following:
   - Lot numbers or other unique identifiers for all components, materials, and supplies used to make the PET drug product;
   - A description of the individual procedures that were followed;
   - The initials, signature, or other identifier of the responsible individual indicating that critical steps and processes used to make and test the PET drug product were completed;
   - The percent yield calculated on the basis of the known or expected amount of the starting radionuclide that is synthetically incorporated into the PET drug product;
   - Raw analytical data on each batch of the PET drug product;
   - Labeling for the PET drug product (see *Labeling* below);
   - Calculations for key parameters defined in the master formula;
   - Results obtained from QC tests of the PET drug product, including chromatograms, print-outs, and other test data;
   - The initials of the analyst who performed each QC test;
   - A notation of the result for each QC test and whether or not the result meets the acceptance criteria;
   - The date and time of release and the signature of the individual who assumes overall responsibility for, and adherence to, the procedures used to make the batch and authorizes the release of the batch for human administration; and
   - Documentation on the batch record of process deviations, when applicable.

Accessed from 167.78.4.19 by James Cumbie (ocean22) on Mon Sep 09 15:04:23 EDT 2013

Entries in batch records should be made immediately after the activity is performed and should include the initials, signature, or other identifier for the person making the entry. Corrections to paper entries should be dated and initialed, signed, or noted with an identifier of the person making the corrections but leaving the original entry still readable.

Aseptic Operations for Parenteral PET Drug Products: Because the sterility test results for parenteral PET drug products are obtained after release for human administration, aseptic operations and procedures should adequately ensure a sterile PET drug product. All aseptically prepared PET drug products for parenteral administration should be filtered through a sterile membrane filter of 0.22-µm or finer pore size into a closed sterile vial or container or sterilized by steam sterilization. Although the chemical synthesis of a parenteral PET drug product may take place in an open or closed apparatus, the membrane filtration of the PET drug product should be a closed system downstream of the membrane filter. This system should be aseptically assembled from presterilized, commercially available components.

Components—The sterile components used in the aseptically assembled apparatus typically consist of an empty vial, needles, membrane filters, vent needles, syringes, tubing, stopcocks, and perhaps others. All components should be single-use, commercially available, presterilized items. If components in the aseptically assembled apparatus are sterilized by the PET facility, the sterilization processes should be verified. The exact configuration of the PET drug product vial assembly is process dependent. A typical example is a sterile, empty vial with a membrane filter of 0.22-µm pore size attached to a needle that is inserted through the vial septum for filtration, a membrane filter of 0.22-µm pore size attached to a needle that is inserted through the vial septum for venting the vial during filtration, and a syringe with needle inserted through the vial septum for removal of the QC sample after filtration is complete.

PET Drug Product Vial Assembly—Aseptic techniques should be used in the preparation of the PET drug product vial assembly, especially the assembly of all components downstream from the membrane sterilizing filter. These operations should be performed in an ISO Class 5 environment (see *Facilities and Equipment* above).

Following the creation of the PET drug product vial assembly in the ISO Class 5 environment, the assembly can be removed to another location for filtration. The location can be a noncontrolled environment as long as the integrity of the PET drug product vial assembly is not compromised during the process. Any PET drug product vial assembly that is compromised during this process should be discarded.

Aseptic Techniques—Any sterile component downstream from the membrane filter that contacts the PET drug product should be handled using suitable aseptic techniques inside the aseptic workstation. During aseptic operations, operators should wear proper attire, including a clean laboratory jacket, forearm sleeves, hair cover, sanitized gloves that cover the wrist, and beard/moustache covers (as appropriate). Multiple PET drug product vial assemblies can be prepared in a single aseptic operational cycle. The storage conditions and time for assembled vials should be based on data from aseptic simulations.

Sterility Test Inoculations—Sterility tests should be performed to assess the quality of PET drug products intended for parenteral administration. The inoculation of sterility test media should be performed in a manner that is consistent with personnel radiation exposure requirements but that also minimizes the risk of false positives caused by adventitious contamination during the inoculation process. For media tubes with a screw-cap opening, the inoculation should be performed in the aseptic workstation. Media tubes with a septum cap can be inoculated in a shielded area that does not contain a HEPA filter.

STABILITY

Written specifications for the expiration time and storage conditions should be established for each PET drug product. The expiration time should be based on the results of stability testing (and specific activity requirements, as appropriate). Stability testing of the PET drug product should be performed at the highest strength of the PET drug product and in the intended final vial or container. At least three batches of the PET drug product should be stored according to proposed conditions and should be examined after a time period equal to the proposed shelf life. In addition, the PET drug product should meet acceptance criteria for radiochemical purity, appearance (color and clarity), pH, and stabilizer effectiveness (as appropriate) and chemical purity at expiry. Analytical methods should be reliable, meaningful, and specific. Stability studies should be repeated if there is a change in strength, stabilizer (or preservative) content that has the potential to affect the stability, the final vial or container, storage conditions, or expiration time. The results of stability testing should be documented.

CONTROLS AND ACCEPTANCE CRITERIA FOR FINISHED PET DRUG PRODUCTS

Written specifications for identity, strength, quality, and purity should be established for each PET drug product. For PET drug products intended for parenteral administration, specifications should be included for sterility and bacterial endotoxins.

Written procedures should be developed for QC tests. QC and documentation requirements should be established for each batch or sub-batch of a PET drug product (see *Process and Operational Controls* above). All QC tests should be executed by qualified and trained personnel according to written procedures.

The short half-life of PET radionuclides frequently precludes the completion of all QC tests before shipment of the PET drug product. This effectively creates two levels of release, one for distribution and the other for human administration. This is acceptable as long as the QC tests required for release of the PET drug product for human administration (see below) are completed before administration. The controls used in the release for distribution should be previously established in writing and should be documented in routine practice. It is not necessary to retain reserve samples of PET drug products.

If a *USP* compendial test procedure is used, the procedure should be verified to demonstrate that the test works under the conditions of actual use. Noncompendial test procedures used in the testing of a PET drug product should be reliable and specific. Supporting data for use of all analytical methods should be documented. Data derived from process studies or from in-process

Copyright (c) 2013 The United States Pharmacopeial Convention. All rights reserved.

controls can be used as a basis for the omission of some QC tests. An example of this approach is the chlorodeoxyglucose determination in the testing of [^{18}F]fludeoxyglucose. Supporting data from process studies or in-process controls should be documented.

Quality Control Tests: The following QC tests should be performed on each batch before release for administration:

1. Appearance by visual inspection for color and clarity (absence of particulate matter) for parenteral dosage forms.
2. Measurement of the pH for parenteral dosage forms.
3. Determination of the radiochemical purity and identity of all dosage forms.
4. Determination of the radionuclidic identity of all dosage forms by half-life measurement.
5. Determination of the strength.
6. Determination of the specific activity of PET drug products that have mass-dependent localization or toxicity concerns.
7. Determination of residual solvents used in the synthesis or purification processes.
8. Determination of the chemical purity and residual compounds used in the synthesis or purification processes (e.g., cryptand [2.2.2]).
9. Determination of preservative or stabilizer, if present.

For PET drug products with very short-lived radionuclides, prepare an initial QC sub-batch that is representative of successive sub-batches prepared in a defined operational cycle. The QC tests described in the previous paragraph should be considered for the QC sub-batch before release of subsequent sub-batches for human administration. For subsequent sub-batches of parenteral and inhaled dosage forms, visual inspection should be performed before human administration. In certain cases, limited testing of each sub-batch before administration may be appropriate (e.g., for pH determination of [^{13}N]ammonia produced by Devarda's alloy).

Periodic Quality Indicating Tests: For all PET drug products, periodically measure the radionuclidic purity of decayed samples of the PET drug product to assess the presence of long-lived radionuclides that are produced in targetry associated with the particle accelerator. For PET drug products labeled with certain radionuclides (e.g., ^{94m}Tc, ^{124}I, ^{64}Cu, ^{76}Br, and others), consider the measurement of radionuclidic purity by gamma spectrometry. Periodic quality indicating tests for PET drug products also include low-level nontoxic impurities (e.g., Class 3 residual solvents). The periodic testing should be performed at predetermined intervals rather than on a batch-to-batch basis.

Microbiological Tests for Sterile PET Drug Products: For PET drug products intended for parenteral administration, perform the following QC tests in addition to those described previously:

1. Determine the integrity of the membrane filter. Filter units used to sterilize PET drug products should be subjected to manufacturers' recommended integrity tests such as the bubble point test. Perform the filter integrity test after completion of filtration and before release of the PET drug product for human administration. In the case of PET drug products with $T_{1/2} < 10$ min, the PET drug product can be released for human administration before completion of the filter integrity test. In this case, the test should be completed as soon as possible after release.
2. Perform a test for bacterial endotoxins on each batch or QC sub-batch of a PET drug product. The test can be performed using recognized procedures in *USP* (see *Bacterial Endotoxins Test* ⟨85⟩). Regardless of which test is used, it should be initiated before release of each batch for human administration. For PET drug products with very short-lived radionuclides, complete the test on the QC sub-batch before the release of subsequent sub-batches for human administration. After a record of successful bacterial endotoxin tests is established for a particular PET drug product, it is necessary only to test the first batch prepared each day for that PET drug product.
3. Perform a test for sterility on each batch or QC sub-batch. The sterility test consists of the inoculation and incubation of a sample into each of two media: tryptic soy broth and fluid thioglycollate. The inoculated volume may be adjusted to avoid excessive losses because of sterility testing (e.g., 0.1 mL inoculated into 10 mL of media). The incubation period for sterility tests should begin within 30 hours of the membrane filtration. The samples can be inoculated immediately after completion of the membrane filtration, or they can be allowed to decay in a shielded area for as long as 30 hours before inoculation. It is acceptable to exceed the 30-hour period because of weekends or holidays provided it is shown that the extended period does not significantly reduce the viability of a suitable indicator organism in the sample. The sterility test may be performed using other recognized procedures in *USP* (see *Sterility Tests* ⟨71⟩). Samples should be tested individually and may not be pooled. After a record of successful sterility tests is established for a particular PET drug product, it is only necessary to test the first batch prepared each day for that PET drug product.

Conditional Final Release Tests: When a required QC test for a PET drug product cannot be completed because of a malfunction of testing equipment, it may be appropriate to conditionally release the batch. PET drug products may not be released without determination of radiochemical identity and purity. The batch may be released if the following conditions are met:

1. Review historical QC data to assess the frequency of out-of-specification (OOS) results or failures associated with the QC test. A conditional release is appropriate only if the historical data reveal a record of successful completion of the QC test.
2. Confirm that the acceptance criteria are met for all other QC tests for the batch.
3. Retain a sample of the conditionally released batch.
4. Promptly correct the malfunction of the testing equipment.
5. Complete the omitted QC test on the sample as soon as possible after the malfunction has been corrected. This is not necessary if the omitted QC result is meaningless after decay of the PET drug product.
6. If the sample fails the omitted QC test, immediately notify the physician or receiving facility that ordered the PET drug product.
7. Document all actions regarding the conditional release of the PET drug product, including the justification for the release, results of completed testing, and any notifications and corrective and preventive actions resulting from the incident.

In addition to the finished QC testing, other appropriate laboratory determinations could involve in-process testing of an attribute that is equivalent to finished-product testing of that attribute; continuous statistical process monitoring; or some combination of these approaches with finished testing of each PET drug product.

Accessed from 167.78.4.19 by James Cumbie (ocean22) on Mon Sep 09 15:04:23 EDT 2013

IF A PET DRUG PRODUCT DOES NOT CONFORM TO SPECIFICATIONS

When the result of a QC test for a PET drug product does not meet established acceptance criteria, the result is OOS. An OOS result does not necessarily mean that the final PET drug product is a failure and should be rejected. Instead, an OOS investigation should be performed to determine if the OOS result indicates a true failure or an analytical error.

If an OOS investigation concludes that the OOS result was caused by an analytical error, invalidate the original test. If a printout is associated with this test, mark the printout *invalid*, retain it for the batch record, and repeat the test.

If an OOS investigation concludes that the OOS result was a true failure, the batch should be rejected and cannot be released for human administration. Segregate the batch to avoid its potential use. Investigate all failures and document the results according to written procedures. The investigation should include, but is not limited to, the examination of processes, operations, and records from previous batches, as well as complaints and other relevant sources of information. If possible, assign an actual or probable cause to the failure, and document corrective actions undertaken as a result of the investigation. Depending on the nature of the failure, the PET drug product may be reprocessed according to pre-established written procedures (see *Reprocessing* below).

When a sterility test for a PET drug product shows signs of microbial growth, the test result is OOS and should be investigated. Upon completion of the investigation, immediately notify all receiving facilities if the product fails to meet the criterion for sterility, including the microbiological findings from the investigation.

REPROCESSING

If a PET drug product is rejected as a true failure, the batch may be reprocessed according to established procedures. It is not possible to describe all possible reprocessing operations, but some examples could include the following:

- pH adjustment;
- A second passage through a membrane filter in the event of a failed filter integrity test; and
- A second passage through a purification column to remove an impurity.

If a PET drug product is reprocessed, the reprocessed batch should be tested to ensure it meets the established acceptance criteria for the PET drug product before release for human administration.

LABELING

The following information should appear on the label attached to the final PET drug container:

- The name of the PET drug product, including the dosage form;
- The assigned batch number; and
- Any required warning statements or symbols (e.g., investigational use, radioactive).

The following information should appear on the shielding for the PET drug product:

- The name of the PET drug product, including the dosage form;
- The assigned batch number;
- The date and time of calibration;
- Any required warning statements or symbols (e.g., investigational use, radioactive);
- As appropriate, the total radioactivity in MBq (or mCi) or the strength in MBq/mL (or mCi/mL) at time of calibration;
- Expiration time and date;
- Added substance(s) (e.g., stabilizer inactive ingredients);
- The name of the producer where the PET drug product was made or the name of the distributor;
- Other applicable warning statement(s) (e.g., "Do not use if cloudy or if it contains particulate matter" or investigational use labeling); and
- Other pertinent information (if required), such as storage condition(s), half-life.

⟨831⟩ REFRACTIVE INDEX

The refractive index (n) of a substance is the ratio of the velocity of light in air to the velocity of light in the substance. It is valuable in the identification of substances and the detection of impurities.

Although the standard temperature for Pharmacopeial measurements is 25°, many of the refractive index specifications in the individual monographs call for determining this value at 20°. The temperature should be carefully adjusted and maintained, since the refractive index varies significantly with temperature.

The values for refractive index given in this Pharmacopeia are for the D line of sodium (doublet at 589.0 nm and 589.6 nm). Most instruments available are designed for use with white light but are calibrated to give the refractive index in terms of the D line of sodium light.

The Abbé refractometer measures the range of refractive index for those Pharmacopeial materials for which such values are given. Other refractometers of equal or greater accuracy may be employed.

Copyright (c) 2013 The United States Pharmacopeial Convention. All rights reserved.

To achieve the theoretical accuracy of ±0.0001, it is necessary to calibrate the instrument against a standard provided by the manufacturer and to check frequently the temperature control and cleanliness of the instrument by determining the refractive index of distilled water, which is 1.3330 at 20° and 1.3325 at 25°.

⟨841⟩ SPECIFIC GRAVITY

Change to read:

Unless otherwise stated in the individual monograph, the specific gravity determination is applicable only to liquids, and, unless otherwise stated, is based on the ratio of the weight of a liquid in air at 25° to that of an equal volume of water at the same temperature. Where a temperature is specified in the individual monograph, the specific gravity is the ratio of the weight of the liquid in air at the specified temperature to that of an equal volume of water at the same temperature. When the substance is a solid at 25°, determine the specific gravity of the melted material at the temperature directed in the individual monograph, and refer to water at 25°.

Unless otherwise stated in the individual monograph, the density is defined as the mass of a unit volume of the substance at 25° expressed in kilograms per cubic meter or grams per cubic centimeter (1 kg/m³ = 10^{-3} g/cm³). ■Where the density is known, mass can be converted to volume, or volume converted to mass, by the formula: volume = mass/density.■1S (*USP36*)

Unless otherwise directed in the individual monograph, use *Method I.*

METHOD I

Procedure—Select a scrupulously clean, dry pycnometer that previously has been calibrated by determining its weight and the weight of recently boiled water contained in it at 25°. Adjust the temperature of the liquid to about 20°, and fill the pycnometer with it. Adjust the temperature of the filled pycnometer to 25°, remove any excess liquid, and weigh. When the monograph specifies a temperature different from 25°, filled pycnometers must be brought to the temperature of the balance before they are weighed. Subtract the tare weight of the pycnometer from the filled weight.

The specific gravity of the liquid is the quotient obtained by dividing the weight of the liquid contained in the pycnometer by the weight of water contained in it, both determined at 25°, unless otherwise directed in the individual monograph.

METHOD II

The procedure includes the use of the *Oscillating transducer density meter.* The apparatus consists of the following:

— a U-shaped tube, usually of borosilicate glass, which contains the liquid to be examined;
— a magneto-electrical or piezo-electrical excitation system that causes the tube to oscillate as a cantilever oscillator at a characteristic frequency depending on the density of the liquid to be examined;
— a means of measuring the oscillation period (T), which may be converted by the apparatus to give a direct reading of density or used to calculate density by using the constants A and B described below; and
— a means to measure and/or control the temperature of the oscillating transducer containing the liquid to be tested.

The oscillation period is a function of the spring constant (c) and the mass of the system:

$$T^2 = ((M/c) + ((\rho \times V)/c)) \times 4\pi^2$$

where ρ is the density of the liquid to be tested, M is the mass of the tube, and V is the volume of the filled tube.

Introduction of two constants $A = c/(4\pi^2 \times V)$ and $B = (M/V)$, leads to the classical equation for the oscillating transducer:

$$\rho = A \times T^2 - B$$

The specific gravity of the liquid is given by the formula:

$$\rho_{(L)}/\rho_{(W)}$$

where $\rho_{(L)}$ and $\rho_{(W)}$ are the densities of the liquid and water, respectively, both determined at 25°, unless otherwise directed in the individual monograph.

Calibration—The constants A and B are determined by operating the instrument with the U-tube filled with two different samples of known density (e.g., degassed water and air). Perform the control measurements daily, using degassed water: the results displayed for the control measurement using degassed water do not deviate from the reference value (ρ_{25} = 0.997043 g/cm³) by more than its specified error. Precision is a function of the repeatability and stability of the oscillator frequency. Density meters are able to achieve measurements with an error on the order of 1×10^{-3} g/cm³ to 1×10^{-5} g/cm³ and a repeatability of 1×10^{-4} g/cm³ to 1×10^{-6} g/cm³. For example, an instrument specified to $\pm1\times10^{-4}$ g/cm³ must display 0.9970 ± 0.0001 g/cm³ in order to be suitable for further measurement, otherwise a readjustment is necessary. Calibration with certified reference materials should be carried out regularly.

Accessed from 167.78.4.19 by James Cumbie (ocean22) on Mon Sep 09 15:04:23 EDT 2013

Procedure—Using the manufacturer's instructions, perform the measurements using the same procedure as for *Calibration.* If necessary, equilibrate the liquid to be examined at 25° before introduction into the tube to avoid the formation of bubbles and to reduce the time required for measurement. Factors affecting accuracy include the following:

— temperature uniformity throughout the tube,
— nonlinearity over a range of density,
— parasitic resonant effects, and
— viscosity, if the oscillating transducer density meters used do not provide automatic compensation of sample viscosity influence.

⟨851⟩ SPECTROPHOTOMETRY AND LIGHT-SCATTERING

ULTRAVIOLET, VISIBLE, INFRARED, ATOMIC ABSORPTION, FLUORESCENCE, TURBIDIMETRY, NEPHELOMETRY, AND RAMAN MEASUREMENT

Absorption spectrophotometry is the measurement of an interaction between electromagnetic radiation and the molecules, or atoms, of a chemical substance. Techniques frequently employed in pharmaceutical analysis include UV, visible, IR, and atomic absorption spectroscopy. Spectrophotometric measurement in the visible region was formerly referred to as *colorimetry;* however, it is more precise to use the term "colorimetry" only when considering human perception of color.

Fluorescence spectrophotometry is the measurement of the emission of light from a chemical substance while it is being exposed to UV, visible, or other electromagnetic radiation. In general, the light emitted by a fluorescent solution is of maximum intensity at a wavelength longer than that of the exciting radiation, usually by some 20 to 30 nm.

Light-Scattering involves measurement of the light scattered because of submicroscopic optical density inhomogeneities of solutions and is useful in the determination of weight-average molecular weights of polydisperse systems in the molecular weight range from 1000 to several hundred million. Two such techniques utilized in pharmaceutical analysis are *turbidimetry* and *nephelometry.*

Raman spectroscopy (inelastic light-scattering) is a light-scattering process in which the specimen under examination is irradiated with intense monochromatic light (usually laser light) and the light scattered from the specimen is analyzed for frequency shifts.

The wavelength range available for these measurements extends from the short wavelengths of the UV through the IR. For convenience of reference, this spectral range is roughly divided into the UV (190 to 380 nm), the visible (380 to 780 nm), the near-IR (780 to 3000 nm), and the IR (2.5 to 40 µm or 4000 to 250 cm^{-1}).

COMPARATIVE UTILITY OF SPECTRAL RANGES

For many pharmaceutical substances, measurements can be made in the UV and visible regions of the spectrum with greater accuracy and sensitivity than in the near-IR and IR. When solutions are observed in 1-cm cells, concentrations of about 10 µg of the specimen per mL often will produce absorbances of 0.2 to 0.8 in the UV or the visible region. In the IR and near-IR, concentrations of 1 to 10 mg per mL and up to 100 mg per mL, respectively, may be needed to produce sufficient absorption; for these spectral ranges, cell lengths of from 0.01 mm to upwards of 3 mm are commonly used.

The UV and visible spectra of substances generally do not have a high degree of specificity. Nevertheless, they are highly suitable for quantitative assays, and for many substances they are useful as additional means of identification.

There has been increasing interest in the use of near-IR spectroscopy in pharmaceutical analysis, especially for rapid identification of large numbers of samples, and also for water determination.

The near-IR region is especially suitable for the determination of –OH and –NH groups, such as water in alcohol, –OH in the presence of amines, alcohols in hydrocarbons, and primary and secondary amines in the presence of tertiary amines.

The IR spectrum is unique for any given chemical compound with the exception of optical isomers, which have identical spectra. However, polymorphism may occasionally be responsible for a difference in the IR spectrum of a given compound in the solid state. Frequently, small differences in structure result in significant differences in the spectra. Because of the large number of maxima in an IR absorption spectrum, it is sometimes possible to quantitatively measure the individual components of a mixture of known qualitative composition without prior separation.

The Raman spectrum and the IR spectrum provide similar data, although the intensities of the spectra are governed by different molecular properties. Raman and IR spectroscopy exhibit different relative sensitivities for different functional groups, e.g., Raman spectroscopy is particularly sensitive to C–S and C–C multiple bonds, and some aromatic compounds are more easily identified by means of their Raman spectra. Water has a highly intense IR absorption spectrum, but a particularly weak Raman spectrum. Therefore, water has only limited IR "windows" that can be used to examine aqueous solutes, while its Raman spectrum is almost completely transparent and useful for solute identification. The two major limitations of Raman spectroscopy are that the minimum detectable concentration of specimen is typically 10^{-1} M to 10^{-2} M and that the impurities in many substances fluoresce and interfere with the detection of the Raman scattered signal.

Optical reflectance measurements provide spectral information similar to that obtained by transmission measurements. Since reflectance measurements probe only the surface composition of the specimen, difficulties associated with the optical thickness and the light-scattering properties of the substance are eliminated. Thus, reflectance measurements are frequently more simple to perform on intensely absorbing materials. A particularly common technique used for IR reflectance measurements is termed attenu-

Copyright (c) 2013 The United States Pharmacopeial Convention. All rights reserved.

ated total reflectance (ATR), also known as multiple internal reflectance (MIR). In the ATR technique, the beam of the IR spectrometer is passed through an appropriate IR window material (e.g., KRS-5, a TlBr-TlI eutectic mixture), which is cut at such an angle that the IR beam enters the first (front) surface of the window, but is totally reflected when it impinges on the second (back) surface (i.e., the angle of incidence of the radiation upon the second surface of the window exceeds the critical angle for that material). By appropriate window construction, it is possible to have many internal reflections of the IR beam before it is transmitted out of the window. If a specimen is placed in close contact with the window along the sides that totally reflect the IR beam, the intensity of reflected radiation is reduced at each wavelength (frequency) that the specimen absorbs. Thus, the ATR technique provides a reflectance spectrum that has been increased in intensity, when compared to a simple reflectance measurement, by the number of times that the IR beam is reflected within the window. The ATR technique provides excellent sensitivity, but it yields poor reproducibility, and is not a reliable quantitative technique unless an internal standard is intimately mixed with each test specimen.

Fluorescence spectrophotometry is often more sensitive than absorption spectrophotometry. In absorption measurements, the specimen transmittance is compared to that of a blank; and at low concentrations, both solutions give high signals. Conversely, in fluorescence spectrophotometry, the solvent blank has low rather than high output, so that the background radiation that may interfere with determinations at low concentrations is much less. Whereas few compounds can be determined conveniently at concentrations below 10^{-5} M by light absorption, it is not unusual to employ concentrations of 10^{-7} M to 10^{-8} M in fluorescence spectrophotometry.

THEORY AND TERMS

The power of a radiant beam decreases in relation to the distance that it travels through an absorbing medium. It also decreases in relation to the concentration of absorbing molecules or ions encountered in that medium. These two factors determine the proportion of the total incident energy that emerge. The decrease in power of monochromatic radiation passing through a homogeneous absorbing medium is stated quantitatively by Beer's law, $\log_{10}(1/T) = A = abc$, in which the terms are as defined below.

Absorbance [Symbol: A]—The logarithm, to the base 10, of the reciprocal of the transmittance (T). [NOTE—Descriptive terms used formerly include optical density, absorbancy, and extinction.]

Absorptivity [Symbol: a]—The quotient of the absorbance (A) divided by the product of the concentration of the substance (c), expressed in g per L, and the absorption path length (b) in cm. [NOTE—It is not to be confused with absorbancy index; specific extinction; or extinction coefficient.]

Molar Absorptivity [Symbol: ε]—The quotient of the absorbance (A) divided by the product of the concentration, expressed in *moles* per L, of the substance and the absorption path length in cm. It is also the product of the absorptivity (a) and the molecular weight of the substance. [NOTE—Terms formerly used include molar absorbancy index; molar extinction coefficient; and molar absorption coefficient.]

For most systems used in absorption spectrophotometry, the absorptivity of a substance is a constant independent of the intensity of the incident radiation, the internal cell length, and the concentration, with the result that concentration may be determined photometrically.

Beer's law gives no indication of the effect of temperature, wavelength, or the type of solvent. For most analytical work the effects of normal variation in temperature are negligible.

Deviations from Beer's law may be caused by either chemical or instrumental variables. Apparent failure of Beer's law may result from a concentration change in solute molecules because of association between solute molecules or between solute and solvent molecules, or dissociation or ionization. Other deviations might be caused by instrumental effects such as polychromatic radiation, slit-width effects, or stray light.

Even at a fixed temperature in a given solvent, the absorptivity may not be truly constant. However, in the case of specimens having only one absorbing component, it is not necessary that the absorbing system conform to Beer's law for use in quantitative analysis. The concentration of an unknown may be found by comparison with an experimentally determined standard curve.

Although, in the strictest sense, Beer's law does not hold in atomic absorption spectrophotometry because of the lack of quantitative properties of the cell length and the concentration, the absorption processes taking place in the flame under conditions of reproducible aspiration do follow the Beer relationship in principle. Specifically, the negative log of the transmittance, or the absorbance, is directly proportional to the absorption coefficient, and, consequently, is proportional to the number of absorbing atoms. On this basis, calibration curves may be constructed to permit evaluation of unknown absorption values in terms of concentration of the element in solution.

Absorption Spectrum—A graphic representation of absorbance, or any function of absorbance, plotted against wavelength or function of wavelength.

Transmittance [Symbol: T]—The quotient of the radiant power transmitted by a specimen divided by the radiant power incident upon the specimen. [NOTE—Terms formerly used include transmittancy and transmission.]

Fluorescence Intensity [Symbol: I]—An empirical expression of fluorescence activity, commonly given in terms of arbitrary units proportional to detector response. The *fluorescence emission spectrum* is a graphical presentation of the spectral distribution of radiation emitted by an activated substance, showing intensity of emitted radiation as ordinate, and wavelength as abscissa. The *fluorescence excitation spectrum* is a graphical presentation of the activation spectrum, showing intensity of radiation emitted by an activated substance as ordinate, and wavelength of the incident (activating) radiation as abscissa. As in absorption spectrophotometry, the important regions of the electromagnetic spectrum encompassed by the fluorescence of organic compounds are the UV, visible, and near-IR, i.e., the region from 250 to 800 nm. After a molecule has absorbed radiation, the energy can be lost as heat or released in the form of radiation of the same or longer wavelength as the absorbed radiation. Both absorption and emission of radiation are due to the transitions of electrons between different energy levels, or orbitals, of the molecule. There is a time delay

Accessed from 167.78.4.19 by James Cumbie (ocean22) on Mon Sep 09 15:04:23 EDT 2013

between the absorption and emission of light; this interval, the duration of the excited state, has been measured to be about 10^{-9} second to 10^{-8} second for most organic fluorescent solutions. The short lifetime of fluorescence distinguishes this type of luminescence from phosphorescence, which is a long-lived afterglow having a lifetime of 10^{-3} second up to several minutes.

Turbidance [Symbol: S]—The light-scattering effect of suspended particles. The amount of suspended matter may be measured by observation of either the transmitted light (turbidimetry) or the scattered light (nephelometry).

Turbidity [Symbol: τ]—In light-scattering measurements, the turbidity is the measure of the decrease in incident beam intensity per unit length of a given suspension.

Raman Scattering Activity—The molecular property (in units of cm^4 per g) governing the intensity of an observed Raman band for a randomly oriented specimen. The scattering activity is determined from the derivative of the molecular polarizability with respect to the molecular motion giving rise to the Raman shifted band. In general, the Raman band intensity is linearly proportional to the concentration of the analyte.

USE OF REFERENCE STANDARDS

With few exceptions, the Pharmacopeial spectrophotometric tests and assays call for comparison against a USP Reference Standard. This is to ensure measurement under conditions identical for the test specimen and the reference substance. These conditions include wavelength setting, slit-width adjustment, cell placement and correction, and transmittance levels. It should be noted that cells exhibiting identical transmittance at a given wavelength may differ considerably in transmittance at other wavelengths. Appropriate cell corrections should be established and used where required.

The expressions, "similar preparation" and "similar solution," as used in tests and assays involving spectrophotometry, indicate that the reference specimen, generally a USP Reference Standard, is to be prepared and observed in a manner identical for all practical purposes to that used for the test specimen. Usually in making up the solution of the specified Reference Standard, a solution of about (i.e., within 10%) the desired concentration is prepared and the absorptivity is calculated on the basis of the exact amount weighed out; if a previously dried specimen of the Reference Standard has not been used, the absorptivity is calculated on the anhydrous basis.

The expressions, "concomitantly determine" and "concomitantly measured," as used in tests and assays involving spectrophotometry, indicate that the absorbances of both the solution containing the test specimen and the solution containing the reference specimen, relative to the specified test blank, are to be measured in immediate succession.

APPARATUS

Many types of spectrophotometers are available. Fundamentally, most types, except those used for IR spectrophotometry, provide for passing essentially monochromatic radiant energy through a specimen in suitable form, and measuring the intensity of the fraction that is transmitted. Fourier transform IR spectrophotometers use an interferometric technique whereby polychromatic radiation passes through the analyte and onto a detector on an intensity and time basis. UV, visible, and dispersive IR spectrophotometers comprise an energy source, a dispersing device (e.g., a prism or grating), slits for selecting the wavelength band, a cell or holder for the test specimen, a detector of radiant energy, and associated amplifiers and measuring devices. In *diode array* spectrophotometers, the energy from the source is passed through the test specimen and then dispersed via a grating onto several hundred light-sensitive diodes, each of which in turn develops a signal proportional to the number of photons at its small wavelength interval; these signals then may be computed at rapid chosen intervals to represent a complete spectrum. Fourier transform IR systems utilize an interferometer instead of a dispersing device and a digital computer to process the spectral data. Some instruments are manually operated, whereas others are equipped for automatic and continuous recording. Instruments that are interfaced to a digital computer have the capabilities also of co-adding and storing spectra, performing spectral comparisons, and performing difference spectroscopy (accomplished with the use of a digital absorbance subtraction method).

Instruments are available for use in the visible; in the visible and UV; in the visible, UV, and near-IR; and in the IR regions of the spectrum. Choice of the type of spectrophotometric analysis and of the instrument to be used depends upon factors such as the composition and amount of available test specimen, the degree of accuracy, sensitivity, and selectivity desired, and the manner in which the specimen is handled.

The apparatus used in atomic absorption spectrophotometry has several unique features. For each element to be determined, a specific source that emits the spectral line to be absorbed should be selected. The source is usually a hollow-cathode lamp, the cathode of which is designed to emit the desired radiation when excited. Since the radiation to be absorbed by the test specimen element is usually of the same wavelength as that of its emission line, the element in the hollow-cathode lamp is the same as the element to be determined. The apparatus is equipped with an aspirator for introducing the test specimen into a flame, which is usually provided by air–acetylene, air–hydrogen, or, for refractory cases, nitrous oxide–acetylene. The flame, in effect, is a heated specimen chamber. A detector is used to read the signal from the chamber. Interfering radiation produced by the flame during combustion may be negated by the use of a chopped source lamp signal of a definite frequency. The detector should be tuned to this alternating current frequency so that the direct current signal arising from the flame is ignored. The detecting system, therefore, reads only the change in signal from the hollow-cathode source, which is directly proportional to the number of atoms to be determined in the test specimen. For Pharmacopeial purposes, apparatus that provides the readings directly in absorbance units is usually required. However, instruments providing readings in percent transmission, percent absorption, or concentration may be

Copyright (c) 2013 The United States Pharmacopeial Convention. All rights reserved.

used if the calculation formulas provided in the individual monographs are revised as necessary to yield the required quantitative results. Percent absorption or percent transmittance may be converted to absorbance, A, by the following two equations:

$$A = 2 - \log_{10} (100 - \% \text{ absorption})$$

or:

$$A = 2 - \log_{10} (\% \text{ transmittance})$$

Depending upon the type of apparatus used, the readout device may be a meter, digital counter, recorder, or printer. Both single-beam and double-beam instruments are commercially available, and either type is suitable.

Measurement of fluorescence intensity can be made with a simple *filter fluorometer.* Such an instrument consists of a radiation source, a primary filter, a specimen chamber, a secondary filter, and a fluorescence detection system. In most such fluorometers, the detector is placed on an axis at 90° from that of the exciting beam. This right-angle geometry permits the exciting radiation to pass through the test specimen and not contaminate the output signal received by the fluorescence detector. However, the detector unavoidably receives some of the exciting radiation as a result of the inherent scattering properties of the solutions themselves, or if dust or other solids are present. Filters are used to eliminate this residual scatter. The primary filter selects short-wavelength radiation capable of exciting the test specimen, while the secondary filter is normally a sharp cut-off filter that allows the longer-wavelength fluorescence to be transmitted but blocks the scattered excitation.

Most fluorometers use photomultiplier tubes as detectors, many types of which are available, each having special characteristics with respect to spectral region of maximum sensitivity, gain, and electrical noise. The photocurrent is amplified and read out on a meter or recorder.

A *spectrofluorometer* differs from a filter fluorometer in that filters are replaced by monochromators, of either the prism or the grating type. For analytical purposes, the spectrofluorometer is superior to the filter fluorometer in wavelength selectivity, flexibility, and convenience, in the same way in which a spectrophotometer is superior to a filter photometer.

Many radiation sources are available. Mercury lamps are relatively stable and emit energy mainly at discrete wavelengths. Tungsten lamps provide an energy continuum in the visible region. The high-pressure xenon arc lamp is often used in spectrofluorometers because it is a high-intensity source that emits an energy continuum extending from the UV into the IR.

In spectrofluorometers, the monochromators are equipped with slits. A narrow slit provides high resolution and spectral purity, while a large slit sacrifices these for high sensitivity. Choice of slit size is determined by the separation between exciting and emitting wavelengths as well as the degree of sensitivity needed.

Specimen cells used in fluorescence measurements may be round tubes or rectangular cells similar to those used in absorption spectrophotometry, except that they are polished on all four vertical sides. A convenient test specimen size is 2 to 3 mL, but some instruments can be fitted with small cells holding 100 to 300 µL, or with a capillary holder requiring an even smaller amount of specimen.

Light-scattering instruments are available and consist in general of a mercury lamp, with filters for the strong green or blue lines, a shutter, a set of neutral filters with known transmittance, and a sensitive photomultiplier to be mounted on an arm that can be rotated around the solution cell and set at any angle from –135° to 0° to +135° by a dial outside the light-tight housing. Solution cells are of various shapes, such as square for measuring 90° scattering; semioctagonal for 45°, 90°, and 135° scattering; and cylindrical for scattering at all angles. Since the determination of molecular weight requires a precise measure of the difference in refractive index between the solution and solvent, $[(n - n_0)/c]$, a second instrument, a differential refractometer, is needed to measure this small difference.

Raman spectrometers include the following major components: a source of intense monochromatic radiation (invariably a laser); optics to collect the light scattered by the test specimen; a (double) monochromator to disperse the scattered light and reject the intense incident frequency; and a suitable light-detection and amplification system. Raman measurement is simple in that most specimens are examined directly in melting-point capillaries. Because the laser source can be focused sharply, only a few microliters of the specimen is required.

PROCEDURE

Absorption Spectrophotometry

Detailed instructions for operating spectrophotometers are supplied by the manufacturers. To achieve significant and valid results, the operator of a spectrophotometer should be aware of its limitations and of potential sources of error and variation. The instruction manual should be followed closely on such matters as care, cleaning, and calibration of the instrument, and techniques of handling absorption cells, as well as instructions for operation. The following points require special emphasis.

Check the instrument for accuracy of calibration. Where a continuous source of radiant energy is used, attention should be paid to both the wavelength and photometric scales; where a spectral line source is used, only the photometric scale need be checked. A number of sources of radiant energy have spectral lines of suitable intensity, adequately spaced throughout the spectral range selected. The best single source of UV and visible calibration spectra is the quartz-mercury arc, of which the lines at 253.7, 302.25, 313.16, 334.15, 365.48, 404.66, and 435.83 nm may be used. The glass-mercury arc is equally useful above 300 nm. The 486.13-nm and 656.28-nm lines of a hydrogen discharge lamp may be used also. The wavelength scale may be calibrated also by means of suitable glass filters, which have useful absorption bands through the visible and UV regions. Standard glasses containing didymium (a mixture of praseodymium and neodymium) have been used widely, although glasses containing holmium were found to be

Accessed from 167.78.4.19 by James Cumbie (ocean22) on Mon Sep 09 15:04:23 EDT 2013

superior. Standard holmium oxide solution has superseded the use of holmium glass.[1] The wavelength scales of near-IR and IR spectrophotometers are readily checked by the use of absorption bands provided by polystyrene films, carbon dioxide, water vapor, or ammonia gas.

For checking the photometric scale, a number of standard inorganic glass filters as well as standard solutions of known transmittances such as potassium dichromate are available.[2]

Quantitative absorbance measurements usually are made on solutions of the substance in liquid-holding cells. Since both the solvent and the cell window absorb light, compensation must be made for their contribution to the measured absorbance. Matched cells are available commercially for UV and visible spectrophotometry for which no cell correction is necessary. In IR spectrophotometry, however, corrections for cell differences usually must be made. In such cases, pairs of cells are filled with the selected solvent and the difference in their absorbances at the chosen wavelength is determined. The cell exhibiting the greater absorbance is used for the solution of the test specimen and the measured absorbance is corrected by subtraction of the cell difference.

With the use of a computerized Fourier transform IR system, this correction need not be made, since the same cell can be used for both the solvent blank and the test solution. However, it must be ascertained that the transmission properties of the cell are constant.

Comparisons of a test specimen with a Reference Standard are best made at a peak of spectral absorption for the compound concerned. Assays prescribing spectrophotometry give the commonly accepted wavelength for peak spectral absorption of the substance in question. It is known that different spectrophotometers may show minor variation in the apparent wavelength of this peak. Good practice demands that comparisons be made at the wavelength at which peak absorption occurs. Should this differ by more than ±1 nm from the wavelength specified in the individual monograph, recalibration of the instrument may be indicated.

TEST PREPARATION

For determinations utilizing UV or visible spectrophotometry, the specimen generally is dissolved in a solvent. Unless otherwise directed in the monograph, determinations are made at room temperature using a path length of 1 cm. Many solvents are suitable for these ranges, including water, alcohols, chloroform, lower hydrocarbons, ethers, and dilute solutions of strong acids and alkalies. Precautions should be taken to utilize solvents free from contaminants absorbing in the spectral region being used. It is usually advisable to use water-free methanol or alcohol, or alcohol denatured by the addition of methanol but not containing benzene or other interfering impurities, as the solvent. Solvents of special spectrophotometric quality, guaranteed to be free from contaminants, are available commercially from several sources. Some other analytical reagent-grade organic solvents may contain traces of impurities that absorb strongly in the UV region. New lots of these solvents should be checked for their transparency, and care should be taken to use the same lot of solvent for preparation of the test solution and the standard solution and for the blank.

No solvent in appreciable thickness is completely transparent throughout the near-IR and IR spectrum. Carbon tetrachloride (up to 5 mm in thickness) is practically transparent to 6 µm (1666 cm^{-1}). Carbon disulfide (1 mm in thickness) is suitable as a solvent to 40 µm (250 cm^{-1}) with the exception of the 4.2-µm to 5.0-µm (2381-cm^{-1} to 2000-cm^{-1}) and the 5.5-µm to 7.5-µm (1819-cm^{-1} to 1333-cm^{-1}) regions, where it has strong absorption. Other solvents have relatively narrow regions of transparency. For IR spectrophotometry, an additional qualification for a suitable solvent is that it must not affect the material, usually sodium chloride, of which the cell is made. The test specimen may also be prepared by dispersing the finely ground solid specimen in mineral oil or by mixing it intimately with previously dried alkali halide salt (usually potassium bromide). Mixtures with alkali halide salts may be examined directly or as transparent disks or pellets obtained by pressing the mixture in a die. Typical drying conditions for potassium bromide are 105° in vacuum for 12 hours, although grades are commercially available that require no drying. Infrared microscopy or a mineral oil dispersion is preferable where disproportionation between the alkali halide and the test specimen is encountered. For suitable materials the test specimen may be prepared neat as a thin sample for IR microscopy or suspended neat as a thin film for mineral oil dispersion. For Raman spectrometry, most common solvents are suitable, and ordinary (nonfluorescing) glass specimen cells can be used. The IR region of the electromagnetic spectrum extends from 0.8 to 400 µm. From 800 to 2500 nm (0.8 to 2.5 µm) is generally considered to be the near-IR (NIR) region; from 2.5 to 25 µm (4000 to 400 cm^{-1}) is generally considered to be the mid-range (mid-IR) region; and from 25 to 400 µm is generally considered to be the far-IR (FIR) region. Unless otherwise specified in the individual monograph, the region from 3800 to 650 cm^{-1} (2.6 to 15 µm) should be used to ascertain compliance with monograph specifications for IR absorption.

Where values for IR line spectra are given in an individual monograph, the letters s, m, and w signify strong, medium, and weak absorption, respectively; sh signifies a shoulder, bd signifies a band, and v means very. The values may vary as much as 0.1 µm or 10 cm^{-1}, depending upon the particular instrument used. Polymorphism gives rise to variations in the IR spectra of many compounds in the solid state. Therefore, when conducting IR absorption tests, if a difference appears in the IR spectra of the analyte and the standard, dissolve equal portions of the test substance and the standard in equal volumes of a suitable solvent, evaporate the solutions to dryness in similar containers under identical conditions, and repeat the test on the residues.

In NIR spectroscopy much of the current interest centers around the ease of analysis. Samples can be analyzed in powder form or by means of reflectance techniques, with little or no preparation. Compliance with in-house specifications can be determined by computerized comparison of spectra with spectra previously obtained from reference materials. Many pharmaceutical materials exhibit low absorptivity in this spectral region, which allows incident near-IR radiation to penetrate samples more deeply than UV, visible, or IR radiation. NIR spectrophotometry may be used to observe matrix modifications and, with proper calibration, may be used in quantitative analysis.

[1] National Institute of Standards and Technology (NIST), Gaithersburg, MD 20899: "Spectral Transmittance Characteristics of Holmium Oxide in Perchloric Acid," *J. Res. Natl. Bur. Stds.* **90,** No. 2, 115 (1985). The performance of an uncertified filter should be checked against a certified standard.

[2] For further detail regarding checks on photometric scale of a spectrophotometer, reference may be made to the following NIST publications: *J. Res. Nalt. Bur. Stds.* **76A,** 469 (1972) [re: SRM 93l, "Liquid Absorbance Standards for Ultraviolet and Visible Spectrophotometry" as well as potassium chromate and potassium dichromate]; *NIST Spec. Publ.* 260–116 (1994) [re: SRM 930 and SRM 1930, "Glass Filters for Spectrophotometry."

Copyright (c) 2013 The United States Pharmacopeial Convention. All rights reserved.

In atomic absorption spectrophotometry, the nature of the solvent and the concentration of solids must be given special consideration. An ideal solvent is one that interferes to a minimal extent in the absorption or emission processes and one that produces neutral atoms in the flame. If there is a significant difference between the surface tension or viscosity of the test solution and standard solution, the solutions are aspirated or atomized at a different rate, causing significant differences in the signals generated. The acid concentration of the solutions also affects the absorption processes. Thus, the solvents used in preparing the test specimen and the standard should be the same or as much alike in these respects as possible, and should yield solutions that are easily aspirated via the specimen tube of the burner-aspirator. Since undissolved solids present in the solutions may give rise to matrix or bulk interferences, the total undissolved solids content in all solutions should be kept below 2% wherever possible.

CALCULATIONS

The application of absorption spectrophotometry in an assay or a test generally requires the use of a Reference Standard. Where such a measurement is specified in an assay, a formula is provided in order to permit calculation of the desired result. A numerical constant is frequently included in the formula. The following derivation is provided to introduce a logical approach to the deduction of the constants appearing in formulas in the assays in many monographs.

The Beer's law relationship is valid for the solutions of both the Reference Standard (S) and the test specimen (U):

$$A_S = abC_S \qquad (1)$$

$$A_U = abC_U \qquad (2)$$

in which A_S is the absorbance of the Standard solution of concentration C_S; and A_U is the absorbance of the test specimen solution of concentration C_U. If C_S and C_U are expressed in the same units and the absorbances of both solutions are measured in matching cells having the same dimensions, the absorptivity, a, and the cell thickness, b, are the same; consequently, the two equations may be combined and rewritten to solve for C_U:

$$C_U = C_S(A_U/A_S) \qquad (3)$$

Quantities of solid test specimens to be taken for analysis are generally specified in mg. Instructions for dilution are given in the assay and, since dilute solutions are used for absorbance measurements, concentrations are usually expressed for convenience in units of µg per mL. Taking a quantity, in mg, of a test specimen of a drug substance or solid dosage form for analysis, it therefore follows that a volume (V_U), in L, of solution of concentration C_U may be prepared from the amount of test specimen that contains a quantity W_U, in mg, of the drug substance [NOTE—C_U is numerically the same whether expressed as µg per mL or mg per L], such that:

$$W_U = V_UC_U \qquad (4)$$

The form in which the formula appears in the assay in a monograph for a solid article may be derived by substituting C_U of equation (3) into equation (4). In summary, the use of equation (4), with due consideration for any unit conversions necessary to achieve equality in equation (5), permits the calculation of the constant factor (V_U) occurring in the final formula:

$$W_U = V_UC_S(A_U/A_S) \qquad (5)$$

The same derivation is applicable to formulas that appear in monographs for liquid articles that are assayed by absorption spectrophotometry. For liquid dosage forms, results of calculations are generally expressed in terms of the quantity, in mg, of drug substance in each mL of the article. Thus it is necessary to include in the denominator an additional term, the volume (V), in mL, of the test preparation taken.

Assays in the visible region usually call for comparing concomitantly the absorbance produced by the *Assay preparation* with that produced by a *Standard preparation* containing approximately an equal quantity of a USP Reference Standard. In some situations, it is permissible to omit the use of a Reference Standard. This is true where spectrophotometric assays are made with routine frequency, and where a suitable standard curve is available, prepared with the respective USP Reference Standard, and where the substance assayed conforms to Beer's law within the range of about 75% to 125% of the final concentration used in the assay. Under these circumstances, the absorbance found in the assay may be interpolated on the standard curve, and the assay result calculated therefrom.

Such standard curves should be confirmed frequently, and always when a new spectrophotometer or new lots of reagents are put into use.

In spectrophotometric assays that direct the preparation and use of a standard curve, it is permissible and preferable, when the assay is employed infrequently, not to use the standard curve but to make the comparison directly against a quantity of the Reference Standard approximately equal to that taken of the specimen, and similarly treated.

Fluorescence Spectrophotometry

The measurement of fluorescence is a useful analytical technique. *Fluorescence* is light emitted from a substance in an excited state that has been reached by the absorption of radiant energy. A substance is said to be *fluorescent* if it can be made to fluoresce. Many compounds can be assayed by procedures utilizing either their inherent fluorescence or the fluorescence of suitable derivatives.

Accessed from 167.78.4.19 by James Cumbie (ocean22) on Mon Sep 09 15:04:23 EDT 2013

Test specimens prepared for fluorescence spectrophotometry are usually one-tenth to one-hundredth as concentrated as those used in absorption spectrophotometry, for the following reason. In analytical applications, it is preferable that the fluorescence signal be linearly related to the concentration; but if a test specimen is too concentrated, a significant part of the incoming light is absorbed by the specimen near the cell surface, and the light reaching the center is reduced. That is, the specimen itself acts as an "inner filter." However, fluorescence spectrophotometry is inherently a highly sensitive technique, and concentrations of 10^{-5} M to 10^{-7} M frequently are used. It is necessary in any analytical procedure to make a working curve of fluorescence intensity versus concentration in order to establish a linear relationship. All readings should be corrected for a solvent blank.

Fluorescence measurements are sensitive to the presence of dust and other solid particles in the test specimen. Such impurities may reduce the intensity of the exciting beam or give misleading high readings because of multiple reflections in the specimen cell. It is, therefore, wise to eliminate solid particles by centrifugation; filtration also may be used, but some filter papers contain fluorescent impurities.

Temperature regulation is often important in fluorescence spectrophotometry. For some substances, fluorescence efficiency may be reduced by as much as 1% to 2% per degree of temperature rise. In such cases, if maximum precision is desired, temperature-controlled specimen cells are useful. For routine analysis, it may be sufficient to make measurements rapidly enough so that the specimen does not heat up appreciably from exposure to the intense light source. Many fluorescent compounds are light-sensitive. Exposed in a fluorometer, they may be photo-degraded into more or less fluorescent products. Such effects may be detected by observing the detector response in relationship to time, and may be reduced by attenuating the light source with filters or screens.

Change of solvent may markedly affect the intensity and spectral distribution of fluorescence. It is inadvisable, therefore, to alter the solvent specified in established methods without careful preliminary investigation. Many compounds are fluorescent in organic solvents but virtually nonfluorescent in water; thus, a number of solvents should be tried before it is decided whether or not a compound is fluorescent. In many organic solvents, the intensity of fluorescence is increased by elimination of dissolved oxygen, which has a strong quenching effect. Oxygen may be removed by bubbling an inert gas such as nitrogen or helium through the test specimen.

A semiquantitative measure of the strength of fluorescence is given by the ratio of the fluorescence intensity of a test specimen and that of a standard obtained with the same instrumental settings. Frequently, a solution of stated concentration of quinine in 0.1 N sulfuric acid or fluorescein in 0.1 N sodium hydroxide is used as a reference standard.

Light-Scattering

Turbidity can be measured with a standard photoelectric filter photometer or spectrophotometer, preferably with illumination in the blue portion of the spectrum. Nephelometric measurements require an instrument with a photocell placed so as to receive scattered rather than transmitted light; this geometry applies also to fluorometers, so that, in general, fluorometers can be used as nephelometers, by proper selection of filters. A ratio turbidimeter combines the technology of 90° nephelometry and turbidimetry: it contains photocells that receive and measure scattered light at a 90° angle from the sample as well as receiving and measuring the forward scatter in front of the sample; it also measures light transmitted directly through the sample. Linearity is attained by calculating the ratio of the 90° angle scattered light measurement to the sum of the forward scattered light measurement and the transmitted light measurement. The benefit of using a ratio turbidimetry system is that the measurement of stray light becomes negligible.

In practice, it is advisable to ensure that settling of the particles being measured is negligible. This is usually accomplished by including a protective colloid in the liquid suspending medium. It is important that results be interpreted by comparison of readings with those representing known concentrations of suspended matter, produced under precisely the same conditions.

Turbidimetry or nephelometry may be useful for the measurement of precipitates formed by the interaction of highly dilute solutions of reagents, or other particulate matter, such as suspensions of bacterial cells. In order that consistent results may be achieved, all variables must be carefully controlled. Where such control is possible, extremely dilute suspensions may be measured.

The specimen solute is dissolved in the solvent at several different accurately known concentrations, the choice of concentrations being dependent on the molecular weight of the solute and ranging from 1% for M_w = 10,000 to 0.01% for M_w = 1,000,000. Each solution must be very carefully cleaned before measurement by repeated filtration through fine filters. A dust particle in the solution vitiates the intensity of the scattered light measured. A criterion for a clear solution is that the dissymmetry, 45°/135° scattered intensity ratio, has attained a minimum.

The turbidity and refractive index of the solutions are measured. From the general 90° light-scattering equation, a plot of HC/τ versus C is made and extrapolated to infinite dilution, and the weight-average molecular weight, M, is calculated from the intercept, 1/M.

Visual Comparison

Where a color or a turbidity comparison is directed, color-comparison tubes that are matched as closely as possible in internal diameter and in all other respects should be used. For color comparison, the tubes should be viewed downward, against a white background, with the aid of a light source directed from beneath the bottoms of the tubes, while for turbidity comparison the tubes should be viewed horizontally, against a dark background, with the aid of a light source directed from the sides of the tubes.

In conducting limit tests that involve a comparison of colors in two like containers (e.g., matched color-comparison tubes), a suitable instrument, rather than the unaided eye, may be used.

Copyright (c) 2013 The United States Pharmacopeial Convention. All rights reserved.

⟨911⟩ VISCOSITY—CAPILLARY VISCOMETER METHODS

The following procedures are used to determine the viscosity of a Newtonian fluid, i.e. a fluid having a viscosity that is independent of the shearing stress rate or rate of shear. Unless otherwise directed in the individual monograph, use *Method I*.

- **METHOD I. UBBELOHDE-TYPE CAPILLARY VISCOMETER**

Apparatus: The determination may be carried out with an Ubbelohde-type capillary viscometer (*Figure 1*) that has the specifications described in *Table 1* or *Table 2*.

Table 1

Size Number	Nominal Constant of Viscometer (mm^2/s^2)	Measurable Kinematic Viscosity Range (mm^2/s)	Internal Diameter of Tube, R (mm) (±2%)	Volume of Bulb, C (mL) (±5%)	Internal Diameter of Tube, N (mm)
1	0.01	3.5–10	0.64	5.6	2.8–3.2
1A	0.03	6–30	0.84	5.6	2.8–3.2
2	0.1	20–100	1.15	5.6	2.8–3.2
2A	0.3	60–300	1.51	5.6	2.8–3.2
3	1.0	200–1,000	2.06	5.6	3.7–4.3
3A	3.0	600–3,000	2.74	5.6	4.6–5.4
4	10	2,000–10,000	3.70	5.6	4.6–5.4
4A	30	6,000–30,000	4.07	5.6	5.6–6.4
5	100	20,000–100,000	6.76	5.6	6.8–7.5

Table 2

Size Number	Nominal Constant of Viscometer (mm^2/s^2)	Measurable Kinematic Viscosity Range (mm^2/s)	Internal Diameter of Tube, R (mm) (±2%)	Volume of Bulb, C (mL) (±5%)	Internal Diameter of Tube, N (mm)
0	0.001	0.3–1	0.24	1.0	6.0
0C	0.003	0.6–3	0.36	2.0	6.0
0B	0.005	1–5	0.46	3.0	6.0
1	0.01	2–10	0.58	4.0	6.0
1C	0.03	6–30	0.78	4.0	6.0
1B	0.05	10–50	0.88	4.0	6.0
2	0.1	20–100	1.03	4.0	6.0
2C	0.3	60–300	1.36	4.0	6.0
2B	0.5	100–500	1.55	4.0	6.0
3	1.0	200–1,000	1.83	4.0	6.0
3C	3.0	600–3,000	2.43	4.0	6.0
3B	5.0	1,000–5,000	2.75	4.0	6.5
4	10	2,000–10,000	3.27	4.0	7.0
4C	30	6,000–30,000	4.32	4.0	8.0
4B	50	10,000–50,000	5.20	5.0	8.5
5	100	20,000–100,000	6.25	5.0	10.0

Accessed from 167.78.4.19 by James Cumbie (ocean22) on Mon Sep 09 15:04:23 EDT 2013

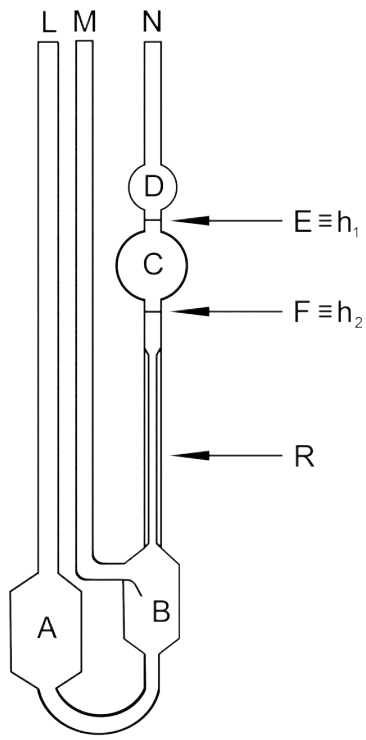

Figure 1. Ubbelohde-Type Capillary Viscometer

Procedure: Fill the viscometer through tube (L) with a sufficient quantity of the sample liquid that is appropriate for the viscometer being used or by following the manufacturer's instructions. Carry out the experiment with the tube in a vertical position. Fill bulb (A) with the liquid, and also ensure that the level of liquid in bulb (B) is below the exit to the ventilation tube (M). Immerse the viscometer in a water or oil bath stabilized at the temperature specified in the individual monograph, and control the temperature to ±0.1°, unless otherwise specified in the individual monograph. Maintain the viscometer in a vertical position for a time period of NLT 30 min to allow the sample temperature to reach equilibrium. Close tube (M), and raise the level of the liquid in tube (N) to a level about 8 mm above mark ($E \equiv h_1$). Keep the liquid at this level by closing tube (N) and opening tube (M). Open tube (N), and measure the time required for the level of the liquid to drop from mark ($E \equiv h_1$) to ($F \equiv h_2$), using an appropriate accurate timing device. [NOTE—In *Table 1*, the minimum flow time should be 350 s for size no. 1, and 200 s for all other sizes. In *Table 2*, the minimum flow time should be 300 s for size no. 0, and 200 s for all other sizes.]

Calibration: Calibrate each viscometer at the test temperature by using fluids of known viscosities of appropriate viscosity standards to determine the viscometer constant, *k*. The viscosity values of the calibration standards should bracket the expected viscosity value of the sample liquid. Determine the viscometer constant at the same temperature as the sample liquid under test. Calculate the viscometer constant, *k*, in mm^2/s^2, from the equation:

$$k = \eta/(\rho \times t)$$

η = known viscosity of the liquid (mPa · s)
ρ = density of the liquid (g/mL)
t = flow time for the liquid to pass from the upper mark to the lower mark (s)

Calculation of kinematic and Newtonian viscosities of sample fluid: A capillary viscometer is chosen so that the flow time, *t*, ranges between 200 and 1000 s, and the kinematic energy correction is typically less than 1%. If the viscosity constant, *k*, is known, use the following equation to calculate the kinematic viscosity, *v*, in mm^2/s, from the flow time, *t*, in s.

$$v = k \times t$$

If the density of the fluid is known at the temperature of the viscosity measurement, then the Newtonian viscosity, η, in mPa · s, is calculated by the following equation:

$$\eta = v \times \rho$$

ρ = density of the fluid (g/mL)

The flow time of the fluid under examination is the mean of NLT three consecutive determinations. The result is valid if the percentage of the relative standard deviation (%RSD) for the three readings is NMT 2.0%.

Copyright (c) 2013 The United States Pharmacopeial Convention. All rights reserved.

• **METHOD II. OSTWALD-TYPE CAPILLARY VISCOMETER**

Apparatus: The determination may be carried out with an Ostwald-type capillary viscometer (*Figure 2*).

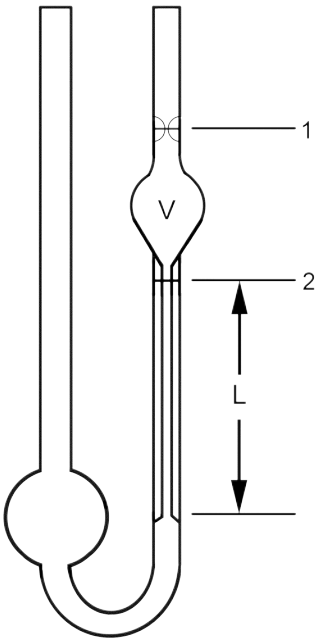

Figure 2. Ostwald-Type Capillary Viscometer

Procedure: Fill the tube with an amount of the sample that is appropriate for the viscometer being used or by following the manufacturer's instructions. The volume of fluid used should be such that the lower bulb is not entirely emptied when the fluid is drawn up through the capillary tube to the uppermost graduation mark. Carry out the experiment with the tube in a vertical position. Immerse the viscometer in a water or oil bath stabilized at the temperature specified in the individual monograph, and control the temperature to ±0.1°, unless otherwise specified in the individual monograph. Maintain the viscometer in a vertical position for a time period of NLT 30 min to allow the sample temperature to reach equilibrium. Using suction, draw the fluid up through the capillary tube until the meniscus is at the level of the uppermost graduation. With both the filling and capillary tubes open to atmospheric pressure, record the time, in s, required for the liquid to flow from the upper mark to the lower mark in the capillary tube. [NOTE—The minimum flow time should be 200 s.]

Calibration and **Calculation of kinematic and Newtonian viscosities of sample fluid:** Proceed as directed in *Method I*.

Accessed from 167.78.4.19 by James Cumbie (ocean22) on Mon Sep 09 15:04:23 EDT 2013

⟨1035⟩ BIOLOGICAL INDICATORS FOR STERILIZATION

A biological indicator is broadly defined as a characterized preparation of a specific microorganism that provides a defined and stable resistance to a specific sterilization process. Microorganisms widely recognized as suitable for biological indicators are spore-forming bacteria, because, with the exception of ionizing radiation processes, these microorganisms are significantly more resistant than normal microflora. A biological indicator can be used to assist in the performance qualification of the sterilization equipment and in the development and establishment of a validated sterilization process for a particular article. Biological indicators are used in processes that render a product sterile in its final package or container, as well as for the sterilization of equipment, materials, and packaging components used in aseptic processing. Biological indicators may also be used to monitor established sterilization cycles and in periodic revalidation of sterilization processes. Biological indicators may also be used to evaluate the capability of processes used to decontaminate isolators or aseptic clean-room environments.

The principles and requirements for these applications are described under *Sterilization and Sterility Assurance of Compendial Articles* ⟨1211⟩.

TYPES OF BIOLOGICAL INDICATORS

There are at least three types of biological indicators. Each type of indicator incorporates a known species of a microorganism of known sterilization resistance to the sterilization mode. Some biological indicators may also contain two different species and concentrations of microorganisms.

One form of biological indicator includes spores that are added to a carrier (a disk or strip of filter paper, glass, plastic, or other materials) and packaged to maintain the integrity and viability of the inoculated carrier.

Carriers and primary packaging shall not contain any contamination (physical, chemical, or microbial) that would adversely affect the performance or the stability characteristics of the biological indicator. The carrier and primary packaging shall not be degraded by the specific sterilization process, which is used in a manner that will affect the performance of the biological indicator. The carrier should withstand transport in the primary and secondary packaging and handling at the point of use. The design of the carrier and primary packaging should minimize the loss of the original inoculum during transport, handling, and shelf life storage.

Another form of biological indicator is a spore suspension that is inoculated on or into representative units of the product to be sterilized. This represents an inoculated product; however, a simulated inoculated product may be used if it is not practical to inoculate the actual product. A simulated product is a preparation that differs in one or more ways from the actual product, but performs as the actual product using test conditions or during actual production sterilization processing. Spore suspensions with a known D value should be used to inoculate the actual or simulated product. If a simulated inoculated product is used, it must be demonstrated that it will not degrade the sterilization resistance of the bioindicator. The physical design of actual or simulated product can affect the resistance of spore suspensions that are inoculated on or into the products. In the case of liquid inoculated products, it is often advisable to determine both the D value and z value of the specific biological indicator microorganism in the specific liquid product. The population, D value, z value where applicable, and endpoint kill time of the inoculated actual or simulated product should be determined.

A third form of biological indicator is a self-contained indicator. A self-contained biological indicator is designed so that the primary package, intended for incubation following sterilization processing, contains the growth medium for recovery of the process-exposed microorganisms. This form of biological indicator together with the self-contained growth medium can be considered a system. In the case of self-contained biological indicators, the entire system provides resistance to the sterilization process.

If the biological indicator is a paper strip or disk in a self-contained package that includes an available culture medium, the package design should be readily penetrable by the sterilizing agent. To allow for the time lag that may occur while the sterilizing agent reaches the contained microorganisms in the system, the D value, process endpoint kill time, and the survival time should be characterized for the system and not solely for the paper strip in the self-contained unit. Following the sterilizing treatment, the spore strip or disk is immersed in the self-contained medium by manipulation, which allows contact with the culture medium.

Self-contained biological indicators may also consist of a spore suspension in its own medium, and they often also contain a dye, which indicates positive or negative growth following incubation. Resistance of the self-contained system is dependent upon penetration of the sterilant into the package. Penetration may be controlled by the manufacturer through varying designs and composition of the self-contained biological indicator package, ampul, or container. Self-contained ampul biological indicators may be incubated directly following exposure to the sterilization process. The entire system is then incubated under the specified conditions. Growth or no growth of the treated spores is determined visually (either by observing a specified color change of an indicator incorporated in the medium or by turbidity) or by microscopic examination of the inoculated medium.

The self-contained system resistance characteristics must also comply with the labeling of the self-contained system and the relevant biological indicator monograph. The self-contained biological indicator system should withstand transport in the secondary packaging and handling at the point of use without breakage. The design of the self-contained system should be such to minimize the loss of the original inoculum of microorganisms during transport and handling. During or after the sterilization process, the materials used in the self-contained system shall not retain or release any substance that can inhibit the growth of low numbers of surviving indicator microorganism under culture conditions. Adequate steps must be taken to demonstrate that the recovery medium has retained its growth support characteristics after exposure to the sterilization process.

Copyright (c) 2013 The United States Pharmacopeial Convention. All rights reserved.

Preparation

All operations associated with the preparation of biological indicators are controlled by a documented quality system. Traceability is maintained for all materials and components incorporated in or coming into direct contact with the microorganism suspension, the inoculated carrier, or the biological indicator.

The preparation of stock spore suspensions of selected microorganisms used as biological indicators requires the development of appropriate procedures, including mass culturing, harvesting, purification, and maintenance of the spore suspensions. The stock suspension should contain predominantly dormant (nongerminating) spores that are held in a nonnutritive liquid.

The finished product (microbial suspension, inoculated carriers, or biological indicators) supplied by commercial manufacturers shall have no microorganisms, other than the test microorganism, present in sufficient numbers to adversely affect the product. The system to minimize the presence of microorganisms other than the biological indicator microorganism in the product will be validated, monitored, and recorded.

Selection for Specific Sterilization Processes

The selection of a biological indicator requires a knowledge of the resistance of the biological indicator system to the specific sterilization process. It must be established that the biological indicator system provides a challenge to the sterilization process that exceeds the challenge of the natural microbial burden in or on the product.

The effective use of biological indicators for the cycle development, process, and product validation, and routine production monitoring of a sterilization process requires a thorough knowledge of the product being sterilized, along with its component parts (materials and packaging). Only the widely recognized biological indicators specified in the particular biological indicator monograph should be used in the development or validation of a sterilization process. This will ensure that the biological indicator selected provides a greater challenge to the sterilization process than the bioburden in or on the product. Some users may require biological indicators with characteristics that differ from those widely available commercially. In such cases, users may grow their own spore cultures for the express purpose of preparing in-house biological indicators for their specific use. In such a case, the user is well advised to use organisms already described in the scientific literature as indicator organisms, and the user must have the capability of determining D and z values for in-house biological indicators. When biological indicators are prepared in-house, users must confirm the population, purity, and shelf life of the biological indicator to ensure the validity of any test conducted using the in-house biological indicator. When a bioburden-based sterilization process design is used, data comparing the resistance of the biological indicator to that of bioburden are essential. Enumeration of the bioburden content of the articles being sterilized is also required. The process must result in a biologically verified lethality sufficient to achieve a probability of obtaining a nonsterile unit that is less than one in a million.

Alternatively, the overkill method may be used in the design of a sterilization process. In this case, specific assumptions are made regarding the resistance assumption used in establishing sterilization process lethality requirements. In general, all overkill processes are built upon the assumption that the bioburden is equal to one million organisms and that the organisms are highly resistant. Thus, to achieve the required probability of a nonsterile unit that is less than one in a million, a minimum 12 D process is required. A 12 D process is defined as a process that provides a lethality sufficient to result in a 12 log reduction, which is equivalent to 12 times a D value for organisms with sufficiently higher resistance than the mean resistance of bioburden. Because the bioburden is assumed to be one million, an overkill process will result in a probability of nonsterility at much less than 10^{-6} in actual practice. Overkill process design and evaluation may differ depending upon the sterilization process under test. The use of an overkill design and validation approach may minimize or obviate the need for bioburden enumeration and identification.

Moist Heat—For moist heat sterilization process, spores of suitable strains of *Bacillus stearothermophilus* are commercially available as biological indicators and frequently employed. Other heat-resistant spore-forming microorganisms such as *Clostridium sporogenes*, *Bacillus subtilis*, and *Bacillus coagulans* have also been used in the development and validation of moist heat sterilization processes.

Dry Heat—For dry heat sterilization, spores of *Bacillus subtilis* spp. are sometimes used to validate the process. During the validation of dry heat sterilization processes, endotoxin depyrogenation studies are frequently conducted in lieu of microbial inactivation studies during the establishment of sterilization cycles because the inactivation rate of endotoxin is slower than the inactivation rate of *Bacillus subtilis* spores. In practice the reduction of endotoxin titer by three or more logs will result in a process that also achieves a probability of nonsterility substantially lower than 10^{-6}.

Ionizing Radiation—Spores of *Bacillus pumilus* have been used to monitor sterilization processes using ionizing radiation; however, this is a cedlining practice. Radiation dose-setting methods that do not use biological indicators have been widely used to establish radiation processes. Furthermore, certain bioburden microorganisms can exhibit greater resistance to radiation than *Bacillus pumilus.*

Ethylene Oxide—For ethylene oxide sterilization, spores of a subspecies of *Bacillus subtilis* (*Bacillus subtilis* var. *niger*) are commonly used. The same biological indicator systems are generally used when 100% ethylene oxide or different ethylene oxide and carrier gas systems are used as sterilants.

Vapor-Phase Hydrogen Peroxide (VPHP)—This process has been shown to be an effective surface sterilant or decontaminant. VPHP is capable of achieving sterilization (probability of nonsterility of less than one in a million) when process conditions so dictate and if the target of sterilization is suitably configured. However, VPHP is also commonly used as a surface decontaminating agent in the treatment of sterility testing, biological and chemical containment, manufacturing isolators, and clean rooms.

Surface decontamination is a process that is distinct from sterilization of product contact materials, container-closure systems, or product. It is a process designed to render an environment free of detectable or recoverable microorganisms. Biological indicators

Accessed from 167.78.4.19 by James Cumbie (ocean22) on Mon Sep 09 15:04:23 EDT 2013

are widely used to verify the efficacy of the decontamination process. However, in the case of decontamination, a spore log reduction value of three to four is adequate because the goal is decontamination rather than sterilization.

Table 1. Typical Characteristics for Commercially Supplied Biological Indicator Systems

Sterilization Mode	Example of a Typical D value (minutes)	Range of D values for Selecting a Suitable Biological Indicator (minutes)	Limits for a Suitable Resistance (depending on the particular D value [minutes])	
			Survival Time	Kill Time
Dry heat[a]	1.9	Min. 1.0	Min. 4.0	10.0
160°		Max. 3.0	Max. 14.0	32.0
Ethylene oxide[b]				
600 mg per L	3.5	Min. 2.5	Min. 10.0	25.0
54°		Max. 5.8	Max. 27.0	68.0
60% relative humidity				
Moist heat[c]	1.9	Min. 1.5	Min. 4.5	13.5
121°		Max. 3.0	Max. 14.0	32.0

[a] For 1.0×10^6 to 5.0×10^6 spores per carrier.
[b] For 1.0×10^6 to 5.0×10^7 spores per carrier.
[c] For 1.0×10^5 to 5.0×10^6 spores per carrier.

Bacillus stearothermophilus is the most prevalently used biological indicator for validating VPHP. Other microorganisms that may be useful as biological indicators in VPHP processes are spores of *Bacillus subtilis* and *Clostridium sporogenes.* Other microorganisms may be considered if their performance responses to VPHP are similar to those of the microorganisms cited above.

These spores may be inoculated on the surface of various gas-impervious carrier systems having glass, metal, or plastic surfaces. Highly absorbent surfaces, such as fibrous substrates, or any other substrate that readily absorbs VPHP or moisture may adversely influence the VPHP concentration available for inactivation of inoculated microorganisms. Paper substrates are not used because VPHP will degrade cellulose-based materials.

For representative characteristics of commercially supplied biological indicators, see *Table 1*.

The biological indicator may also be individually packaged in a suitable primary overwrap package that does not adversely affect the performance of the indicator, and is penetrable by VPHP. Spunbound polyolefin materials have proven to be well suited as an overwrap of biological indicators intended for use in evaluation of VPHP processes. The overwrap material may facilitate laboratory handling of the biological indicators following exposure to VPHP. Also, the use of an overwrap material to package VPHP biological indicators must be carefully assessed to ensure that, following VPHP exposure, residual hydrogen peroxide is not retained by the packaging material, possibly inducing bacteriostasis during the recovery steps. Microbial D values will be influenced by the presence of a biological indicator overwrap material relative to the rate of inactivation and the potential presence of residual VPHP. In cases where biological indicators (inoculated carriers) are being used without the primary package, stringent adherence to aseptic techniques is required.

PERFORMANCE EVALUATION

Manufacturer's Responsibility

The initial responsibility for determining and providing to the users the performance characteristics of a biological indicator[1] lot resides with the manufacturer of biological indicators. The manufacturer should provide with each lot of biological indicators a certificate of analysis that attests to the validity of biological indicator performance claims cited on the biological indicator package label or in the package insert of the label package. The manufacturer should define the sterilization process that the biological indicator will be used to evaluate. The characterization of each type of biological indicator, which provides the basis for label claims, should be performed initially by the manufacturer of the biological indicator using specialized and standardized apparatus under precisely defined conditions.[1] The manufacturer should also provide information concerning the *D value*, the method by which the D value was determined, and microbial count and resistance stability of the biological indicator throughout the labeled shelf life of the indicator. Optimum storage conditions should be provided by the manufacturer, including temperature, relative humidity, and any other requirements for controlled storage. The data obtained from the various required performance assays should be cited in a package insert or on the label of the biological indicator package. The manufacturer should provide directions for use, including the medium and conditions to be used for the recovery of microorganisms after exposure to the sterilization process. Disposal instructions should also be provided by the manufacturer of the biological indicator.

User's Responsibility

Commercial Product—When biological indicators are purchased from a commercial source, their suitability for use in a specific sterilization process should be established through developmental sterilization studies unless existing data are available to support their use in the process. The user should establish in-house acceptance standards for biological indicator lots and consider rejection in the event the biological indicator lot does not meet the established in-house performance standards. A Certificate of Performance

[1] See *Apparatus* under *Biological Indicators—Resistance Performance Tests* ⟨55⟩. These apparatuses have been designed to provide consistent physical conditions applicable to the characterization of biological indicators. The required performance characteristics are also indicated.

Copyright (c) 2013 The United States Pharmacopeial Convention. All rights reserved.

should be obtained for each lot of indicators, and the user should routinely perform audits of the manufacturer's facilities and procedures. If certificates are not obtained and audits have not been performed, or if the biological indicators are to be used outside of the manufacturer's label claims, verification and documentation of performance under conditions of use must exist.

Upon initial receipt of the biological indicator from a commercial supplier, the user should verify the purity and morphology of the purchased biological indicator microorganisms. Verification of at least the proper genus is desirable. Also, a microbial count to determine the mean count per biological indicator unit should be conducted. The manufacturer's comments relative to D value range, storage conditions, expiration dating, and stability of the biological indicator should be observed and noted. The user may consider conducting a D value assessment before acceptance of the lot. Laboratories that have the capability of performing D value assays could conduct a D value determination using one of the three methods cited in the general test chapter *Biological Indicators—Resistance Performance Tests* ⟨55⟩ and in the appropriate USP monographs for specific biological indicators. Particularly important is the verification of the D value and count stability of the biological indicator system if long-term storage is employed.

In the event the spore crop is maintained for longer than 12 months under documented storage conditions, both spore count and resistance analysis must be conducted, unless performance of an original parent crop has been validated for a longer storage period. The result of spore count and resistance assays should be within the range of acceptability established during initial acceptance of the spore crop lot.

Noncommercial Product—A user of biological indicator systems may elect to propagate microorganisms for developing in-house biological indicators to develop or validate sterilization processes. In the event a user becomes a "manufacturer" of biological indicators, biological indicator performance requirements must be met. If the biological indicator system is used for the development of new sterilization processes or validation of existing processes, the same performance criteria described for commercial manufacturers of biological indicators must be followed.

Spore Crop Preparation

Because most biological indicators use microbial spores, accurate records of spore crop identification must be maintained by commercial and noncommercial biological indicator manufacturers. These records should include records pertaining to the source of the initial culture, identification, traceability to the parent spore crop, subculture frequency, media used for sporulation, changes in media preparation, any observation of crop contamination, and pre- and post-heat shock data. Records of usage of the spore crop and resistance to sterilization (namely, D values and z values where applicable) should also be maintained.

Instrumentation

The instrumentation used to evaluate the sterilization resistance of spore crops must be consistent with existing standards[2] related to the performance evaluation of biological indicator systems.

Equipment for the determination of D values of microorganisms exposed to VPHP should be able to closely control equipment operating parameters as described for other biological indicator systems under *Biological Indicators—Resistance Performance Tests* ⟨55⟩. Particularly important is the assurance of a consistently reproducible VPHP concentration, delivered within a finite time, and maintained within a specified concentration range or VPHP pressure range for a defined increment of time. Introduction of biological indicators into a stabilized concentration of VPHP conditions should be via a system that permits rapid entry and removal of the test units from the chamber. Also, the design of the test chamber should allow for the attainment of steady-state VPHP concentrations and pressure, or the use of a defined amount of cubic feet of free flowing VPHP at a standardized pressure and temperature. Currently, VPHP concentration measurement devices may not be widely used. Therefore, exposure conditions may need to be based on the maintenance of steady-state VPHP pressures or flow rates resulting from a known initial weight of hydrogen peroxide, admitted to the chamber in a defined unit of time. Using this information, together with the known fixed volume of the chamber environment, a calculation of the approximate VPHP concentration can be made. If conditions are maintained constant throughout each D value assessment run, comparisons of relative resistance among different biological indicator lots may be readily determined.

USE FOR IN-PROCESS VALIDATION

Regardless of the mode of sterilization, the amount of the initial population of the microorganisms, its resistance to sterilization, and the site of inoculation on or in the product can all influence the rate of biological indicator inactivation.

During product microbial challenges, various areas of the product should be inoculated with biological indicators. If, for example, a container with a closure system is sterilized, both the product solution and the closure should be challenged to ensure that sterilization equivalent to a 10^{-6} (one in a million probability of a nonsterile unit) sterilization assurance level (SAL) will be obtained in the solution as well as at the closure site.

One may need to determine through laboratory studies whether product components are more difficult to sterilize than, for example, a solution or drug within the product. Depending on the locations of the product components most difficult to sterilize, different process parameters may be involved in assuring microbial inactivation to an SAL of 10^{-6}. The product performance qualification phase should identify the most important process parameters for inactivation of microorganisms at the sites most difficult to sterilize. Once these critical processing parameters are determined, during sterilization in-process validation of the product, they should be operated at conditions less than the conditions stated in the sterilization process specifications. Biological indicator survival is predicated upon both resistance and population. Therefore, a 10^{6} biological indicator population is not always required to demonstrate a 10^{-6} SAL. The appropriate use for biological indicators is to employ them to confirm that the developed process parameters result in the desired SAL. In moist heat sterilization, the biological indicator is used to establish that physically measured

[2] BIER/Steam Vessels, American National Standards, ANSI/AAMI ST45:1992.

Accessed from 167.78.4.19 by James Cumbie (ocean22) on Mon Sep 09 15:04:23 EDT 2013

lethality can be verified biologically. Biological indicators with substantive D values and populations substantially less than 10^6 are adequate to validate many sterilization and decontamination processes. It is important that the users be able to scientifically justify their selection of a biological indicator.

⟨1051⟩ CLEANING GLASS APPARATUS

Change to read:

• Success in conducting many Pharmacopeial assays and tests depends upon the cleanliness of the glassware apparatus used. Usage of commercial detergents or inorganic reagents for cleaning should be used when necessary.

In all cases, it is important to verify that the cleaning procedure is appropriate for the particular test or assay being undertaken. This can be accomplished in a number of ways, including use of experimental controls or verification of cleaning by utilization of residue/residual testing to ensure removal of any potential contaminants. A statement should be included in the cleaning protocol describing how the success of the cleaning procedure will be assessed.

For optical measurements, special care is required for cleaning containers, but the use of chromic acid or highly alkaline solutions should be avoided.

Some particular tests, though not inclusive, wherein the use of clean glassware is critical for success include the following: pyrogen and total organic carbon tests as well as assays of heparin sodium and vitamin B_{12} activity.

Selected references that might be helpful in obtaining additional information on cleaning glass apparatus are listed in the *Appendix*. USP does not endorse these citations, and they do not represent an exhaustive list. Further information about the cleanliness of the glassware apparatus procedures mentioned in this chapter may also be found in most quantitative chemical analytical textbooks. • *USP36*

Add the following:

• APPENDIX

Additional information and guidance can be found in the references listed below or in many quantitative chemical analytical textbooks:

1. Parenteral Drug Association. *Draft—Points to Consider for Cleaning Validation* (Technical Report Number 29). Bethesda, MD: Parenteral Drug Association; 1998.
2. Anderson NR. Container cleaning and sterilization. In: Olson WP, Groves MJ, eds. *Aseptic Pharmaceutical Manufacturing*. 1st ed. Buffalo Grove, IL: Interpharm Press; 1987:15–22.
3. Green C. Cleaning validation—application in the laboratory; Montalvo M. The cleaning validation policy and the cleaning validation plan; Verghese G, Kaiser N. Cleaning agents and cleaning chemistry; Verghese G, Lopolito P. Cleaning engineering and equipment design. In: Pluta PL, ed. *Cleaning and Cleaning Validation, Volume 1*. Bethesda, MD: Parenteral Drug Association; 2009.
4. Gordon AJ, Ford RA. Standard glassware cleaning solutions. In: Gordon AJ, Ford RA, eds. *The Chemist's Companion*. Hoboken, NJ: Wiley and Sons; 1973. • *USP36*

⟨1072⟩ DISINFECTANTS AND ANTISEPTICS

INTRODUCTION

A sound cleaning and sanitization program is needed for controlled environments used in the manufacture of Pharmacopeial articles to prevent the microbial contamination of these articles. Sterile drug products may be contaminated via their pharmaceutical ingredients, process water, packaging components, manufacturing environment, processing equipment, and manufacturing operators. Current Good Manufacturing Practices (cGMPs) emphasize the size, design, construction, and location of buildings and construction materials, and the appropriate material flow to facilitate cleaning, maintenance, and proper operations for the manufacture of drug products. When disinfectants are used in a manufacturing environment, care should be taken to prevent the drug product from becoming contaminated with chemical disinfectants as a result of the inherent toxicity of the disinfectants. The requirements for aseptic processing include readily cleanable floors, walls, and ceilings that have smooth and nonporous surfaces; particulate, temperature, and humidity controls; and cleaning and disinfecting procedures to produce and maintain aseptic conditions. The

Copyright (c) 2013 The United States Pharmacopeial Convention. All rights reserved.

cleaning and sanitization program should achieve specified cleanliness standards, control microbial contamination of products, and be designed to prevent the chemical contamination of pharmaceutical ingredients, product-contact surfaces and/or equipment, packaging materials, and ultimately the drug products. These principles also apply to nonsterile dosage forms where the microbial contamination is controlled by the selection of appropriate pharmaceutical ingredients, utilities, manufacturing environments, sound equipment cleaning procedures, products especially formulated to control water activity, inclusion of suitable preservatives, and product packaging design.

In addition to disinfectants, antiseptics are used to decontaminate human skin and exposed tissue and may be used by personnel prior to entering the manufacturing area. Chemical sterilants may be used to decontaminate surfaces in manufacturing and sterility testing areas. Furthermore, sterilants may be used for the sterilization of Pharmacopeial articles, and UV irradiation may be used as a surface sanitizer.

This general information chapter will discuss the selection of suitable chemical disinfectants and antiseptics; the demonstration of their bactericidal, fungicidal, and sporicidal efficacy; the application of disinfectants in the sterile pharmaceutical manufacturing area; and regulation and safety considerations. Biofilm formation and its relationship to disinfectants are outside the scope of this chapter. Additional information not covered in the chapter may be obtained from standard texts on disinfectants and antiseptics.[1]

DEFINITIONS

Antiseptic—An agent that inhibits or destroys microorganisms on living tissue including skin, oral cavities, and open wounds.

Chemical Disinfectant—A chemical agent used on inanimate surfaces and objects to destroy infectious fungi, viruses, and bacteria, but not necessarily their spores. Sporicidal and antiviral agents may be considered a special class of disinfectants. Disinfectants are often categorized as high-level, intermediate-level, and low-level by medically oriented groups based upon their efficacy against various microorganisms.

Cleaning Agent—An agent for the removal from facility and equipment surfaces of product residues that may inactivate sanitizing agents or harbor microorganisms.

Decontamination—The removal of microorganisms by disinfection or sterilization.

Disinfectant—A chemical or physical agent that destroys or removes vegetative forms of harmful microorganisms when applied to a surface.

Sanitizing Agent—An agent for reducing, on inanimate surfaces, the number of all forms of microbial life including fungi, viruses, and bacteria.

Sporicidal Agent—An agent that destroys bacterial and fungal spores when used in sufficient concentration for a specified contact time. It is expected to kill all vegetative microorganisms.

Sterilant—An agent that destroys all forms of microbial life including fungi, viruses, and all forms of bacteria and their spores. Sterilants are liquid or vapor-phase agents.

Microorganisms differ greatly in their resistance to disinfection agents. The order of resistance of clinically significant microorganisms to chemical disinfectants from most to least resistant is listed in *Table 1*.

Table 1. The Resistance of Some Clinically Important Microorganisms to Chemical Disinfectants (Listed in Order of Decreasing Resistance)

Type of Microorganisms	Examples
Bacterial spores	*Bacillus subtilis* and *Clostridium sporogenes*
Mycobacteria	*Mycobacterium tuberculosis*
Nonlipid-coated viruses	Poliovirus and rhinovirus
Fungal spores and vegetative molds and yeast	*Trichophyton, Cryptococcus,* and *Candida* spp.
Vegetative bacteria	*Pseudomonas aeruginosa, Staphylococcus aureus,* and *Salmonella* spp.
Lipid-coated viruses	Herpes simplex virus, hepatitis B virus, and human immunodeficiency virus

CLASSIFICATION OF DISINFECTANTS

Chemical disinfectants are classified by their chemical type. This includes aldehydes, alcohols, halogens, peroxides, quaternary ammonium compounds, and phenolic compounds (see *Table 2*).

Table 2. General Classification of Antiseptics, Disinfectants, and Sporicidal Agents

Chemical Entity	Classification	Example
Aldehydes	Sporicidal agent	2% Glutaraldehyde
Alcohols	General purpose disinfectant, antiseptic, antiviral agent	70% Isopropyl alcohol, 70% alcohol
Chlorine and sodium hypochlorite	Sporicidal agent	0.5% Sodium hypochlorite

[1]Ascenzi, J.M., Ed. *Handbook of Disinfectants and Antiseptics*, 5th ed.; Marcel Dekker: New York, 1995; Block, S.S., Ed. *Disinfection, Sterilization, and Preservation,* 5th ed.; Lippincott Williams & Wilkins Publishers: Philadelphia, 2000. Russell, A.D.; Hugo, W.B.; Ayliffe, G.A.J., Eds. *Principles and Practices of Disinfection, Preservation and Sterilization,* 3rd ed.; Blackwell Science Inc.: London, 1999.

Accessed from 167.78.4.19 by James Cumbie (ocean22) on Mon Sep 09 15:04:23 EDT 2013

Table 2. General Classification of Antiseptics, Disinfectants, and Sporicidal Agents *(Continued)*

Chemical Entity	Classification	Example
Phenolics	General purpose disinfectant	500 µg per g Chlorocresol, 500 µg per g chloroxylenol
Ozone	Sporicidal agent	8% Gas by weight
Hydrogen peroxide	Vapor phase sterilant, liquid sporicidal agent, antiseptic	4 µg per g H_2O_2 vapor, 10%–25% solution, 3% solution
Substituted diguanides	Antiseptic agent	0.5% Chlorhexidine gluconate
Peracetic acid	Liquid sterilant, vapor phase sterilant	0.2% Peracetic acid, 1 µg per g peracetic acid
Ethylene oxide	Vapor-phase sterilant	600 µg per g Ethylene oxide
Quaternary ammonium compounds	General purpose disinfectant, antiseptic	Concentration dependent on application, Benzalkonium chloride
β-Propiolactone	Sporicidal agent	100 µg per g β-Propiolactone

The effectiveness of a disinfectant depends on its intrinsic biocidal activity, the concentration of the disinfectant, the contact time, the nature of the surface disinfected, the hardness of water used to dilute the disinfectant, the amount of organic materials present on the surface, and the type and the number of microorganisms present. Under the Federal Insecticide, Fungicide, and Rodenticide Act (FIFRA), the Environmental Protection Agency (EPA) registers chemical disinfectants marketed in the United States and requires manufacturers to supply product information on the use dilution, type of microorganisms killed, and the necessary contact time. Certain liquid chemical sterilizers intended for use on critical or semicritical medical devices are defined and regulated by the U.S. Food and Drug Administration (FDA).

SELECTION OF AN ANTISEPTIC FOR HAND AND SURGICAL SITE DISINFECTION

Hands and surgical sites are disinfected in a hospital setting to reduce the resident flora and to remove transient flora (e.g., *Streptococcus pyogenes*) and methicillin-resistant *S. aureus* and *P. aeruginosa* that have been implicated in hospital-associated infection. Use of antiseptics to disinfect hands has been shown to be more effective than soap and water in reducing the counts of bacteria on the skin; repeated antiseptic use further reduces these counts. These principles may be applied to clean-room operators in the pharmaceutical industry.

Common antiseptics include 4% chlorhexidine, 10% povidone–iodine, 3% hexachlorophene, 70% isopropyl alcohol, and 0.5% chlorhexidine in 95% alcohol.

SELECTION OF A DISINFECTANT FOR USE IN A PHARMACEUTICAL MANUFACTURING ENVIRONMENT

When selecting a disinfectant for use in a pharmaceutical manufacturing area, the following points should be considered: the number and types of microorganisms to be controlled; the spectrum of activity of commercially available disinfectants; the claims as a sterilant; the disinfectant or sanitizer supported by the EPA registrations; the concentration, application method, and contact time of the disinfectant; the nature of the surface material being disinfected and its compatibility with the disinfectant; the amount of organic compounds on the surface that may inactivate a disinfectant; the possible need to maintain a residual bactericidal activity of the disinfectant on the surface; the corrosiveness of the disinfectant to equipment with repeated application; the safety considerations for operators applying the disinfectant; the compatibility of the disinfectant with cleaning agents and other disinfectants; the planned disinfectant rotation; and the steps that need to be taken to avoid the contamination of pharmaceutical products by a disinfectant.[2]

THEORETICAL DISCUSSION OF DISINFECTANT ACTIVITY

Plots of the log of the number of microorganisms per mL surviving in a disinfectant solution indicate that first-order kinetics can be applied as a gross approximation to the reduction in microbial count with respect to time. In practice, the plots show a more sigmoid curve with a slower initial reduction in numbers followed by an increasing rate with respect to time.

The rate constant, K, for the disinfection process can be calculated by the formula:

$$(1/t)(\log N_0/N)$$

in which t is the time, in minutes, for the microbial count to be reduced from N_0 to N; N_0 is the initial number of organisms, in cfu per mL; and N is the final number, in cfu per mL, of organisms.

As with a first-order chemical reaction, the same concentration of disinfectant reduces the number of organisms more rapidly at elevated temperatures. This can be expressed as a temperature, T, coefficient per 10° rise in temperature, Q_{10}, calculated by the formula:

$$\text{Time to decontamination at } T^\circ / \text{Time to decontamination at } T$$

in which T is T° – 10.

[2]Denny, V.F.; Marsik, F.J. Current Practices in the Use of Disinfectants within the Pharmaceutical Industry. *PDA J. of Pharmaceutical Sci. and Tech.*, **1997**, *51*, (6), 227–228.

Copyright (c) 2013 The United States Pharmacopeial Convention. All rights reserved.

Further evidence that a first-order reaction is an inadequate description of disinfection is that the Q_{10} values for chemical and enzyme reactions are 2 to 3, while the common disinfectants phenol and alcohol have a Q_{10} of 4 and 45, respectively.

Critical to the successful employment of disinfectants is an understanding of the effect of disinfectant concentration on microbial reduction. A plot of the log of the time to reduce the microbial population in a standard inoculum to zero against the log of the disinfectant concentration is a straight line with the slope of the line termed the concentration exponent, n. The relationship can be expressed as follows:

$$n = (\text{log of the kill time at concentration } C_2) - (\text{log of the kill time at concentration } C_1)/(\log C_1 - \log C_2)$$

in which C_1 and C_2 are the higher and lower disinfectant concentrations, respectively.

The wide differences in concentration exponents, n, have practical consequences in picking the use dilution of different disinfectants and in using dilution to neutralize a disinfectant in disinfectant-effectiveness testing and routine microbial monitoring of the manufacturing environment. For example, mercuric chloride has a concentration exponent of 1, so a 3-fold dilution will reduce the disinfectant activity by 3^1 (or by one-third), while phenol with a concentration exponent of 6 will have a 3^6 (or a 729-fold) reduction in disinfectant activity. Disinfectants with a larger concentration exponent or dilution coefficient rapidly lose activity when diluted. The concentration exponents for some disinfectants are listed in *Table 3*.

Table 3. Concentration Exponents of Common Antiseptics, Disinfectants, and Sterilants

Disinfectant	Concentration Exponents
Hydrogen peroxide	0.5
Sodium hypochlorite	0.5
Mercuric chloride	1
Chlorhexidine	2
Formaldehyde	1
Alcohol	9
Phenol	6
Quaternary ammonium compounds	0.8 to 2.5
Aliphatic alcohols	6.0 to 12.7
Phenolic compounds	4 to 9.9

Another important consideration may be the pH of the disinfectant. Many disinfectants are more active in the ionized form, while others are more active in the nonionized form. The degree of ionization will depend on the pK_a of the agent and the pH of the disinfection environment. For example, phenol, with a pK_a of 10, will be more effective at a pH below 7 where it is nonionized.

MECHANISM OF DISINFECTANT ACTIVITY

Table 4 lists the sites and modes of action of some representative disinfectants.

Table 4. Mechanism of Disinfectant Activity Against Microbial Cells

Target	Disinfectant
Cell wall	Formaldehyde, hypochlorite, and glutaraldehyde
Cytoplasmic membrane, action on membrane potential	Anilides and hexachlorophene
Membrane enzymes, action on electron-transport chain	Hexachlorophene
Action on ATP	Chlorhexidine and ethylene oxide
Action on enzymes with –SH groups	Ethylene oxide, glutaraldehyde, hydrogen peroxide, hypochlorite, and iodine
Action on general membrane permeability	Alcohols, chlorhexidine, and quaternary ammonium compounds
Cell contents, general coagulation	Chlorhexidine, aldehydes, and quaternary ammonium compounds
Ribosomes	Hydrogen peroxide
Nucleic acids	Hypochlorites
Thiol groups	Ethylene oxide, glutaraldehyde, hydrogen peroxide, and hypochlorite
Amino groups	Ethylene oxide, glutaraldehyde, and hypochlorite
General oxidation	Hypochlorite

MICROBIAL RESISTANCE TO DISINFECTANTS

The development of microbial resistance to antibiotics is a well-described phenomenon. The development of microbial resistance to disinfectants is less likely to occur at significant levels, as disinfectants are more powerful biocidal agents than antibiotics. In addition, they are normally applied in high concentrations against low populations of microorganisms usually not growing actively, so the selective pressure for the development of resistance is less profound. However, the most frequently isolated microorganisms from an environmental monitoring program may be periodically subjected to use-dilution testing with the agents used in the disinfection program to confirm their susceptibility, as there are real differences among different species in resistance to the lethal effects of different sanitizers.

Accessed from 167.78.4.19 by James Cumbie (ocean22) on Mon Sep 09 15:04:23 EDT 2013

DISINFECTANT CHALLENGE TESTING

Under FIFRA, the EPA requires companies that register public health antimicrobial pesticide products including disinfectants, sanitization agents, sporicidal agents, and sterilants to ensure the safety and effectiveness of their products before they are sold or distributed. Companies registering these products must address the chemical composition of their product, include toxicology data to document that their product is safe if used as directed on the label, include efficacy data to document their claims of effectiveness against specific organisms and to support the directions for use provided in the labeling, and provide labeling that reflects the required elements for safe and effective use. While these directions provide valuable information, they may not be helpful in terms of the products' use as disinfectants in a manufacturing environment.

In the United States, the official disinfectant testing methods are published by AOAC International[3] and include the Phenol-Coefficient Test, Use-Dilution Method Test, Hard Surface Carrier Method, and Sporicidal Carrier Test. A scientific study submitted for EPA review in support of disinfectant registration must be conducted at a laboratory facility that follows the Good Laboratory Practices (GLP) regulations (21 CFR 58). To demonstrate the efficacy of a disinfectant within a pharmaceutical manufacturing environment, it may be deemed necessary to conduct the following tests: (1) use-dilution tests (screening disinfectants for their efficacy at various concentrations and contact times against a wide range of standard test organisms and environmental isolates); (2) surface challenge tests (using standard test microorganisms and microorganisms that are typical environmental isolates, applying disinfectants to surfaces at the selected use concentration with a specified contact time, and determining the log reduction of the challenge microorganisms); and (3) a statistical comparison of the frequency of isolation and numbers of microorganisms isolated prior to and after the implementation of a new disinfectant. This is considered necessary because critical process steps like disinfection of aseptic processing areas, as required by GMP regulations, need to be validated, and the EPA registration requirements do not address how disinfectants are used in the pharmaceutical, biotechnological, and medical device industries. For the surface challenge tests, the test organisms are enumerated using swabs, surface rinse, or contact plate methods. Neutralizers that inactivate the disinfectants should be included in either the diluent or microbiological media used for microbial enumeration or both. Information on disinfectant neutralization may be found in *Validation of Microbial Recovery from Pharmacopeial Articles* ⟨1227⟩.

The disinfectant efficacy test must have realistic acceptance criteria. In practice, sufficient organisms need to be inoculated on a 2-inch × 2-inch square of the surface being decontaminated, i.e., a coupon, to demonstrate at least a 2 (for bacterial spores) to 3 (for vegetative bacteria) log reduction during a predetermined contact time (i.e., 10 minutes over and above the recovery observed with a control disinfectant application). The efficacy of the neutralizers and their ability to recover inoculated microorganisms from the material should be demonstrated during the use-dilution or surface-challenge studies. Points to remember are that disinfectants are less effective against the higher numbers of microorganisms used in laboratory challenge tests than they are against the numbers that are found in clean rooms (see *Microbiological Control and Monitoring of Aseptic Processing Environments* ⟨1116⟩); that inocula from the log growth phase that are typically employed in laboratory tests are more resistant, with the exception of spores formed during the static phase, than those from a static or dying culture or stressed organisms in the environment; and that microorganisms may be physically removed during actual disinfectant application in the manufacturing area.

Although not all inclusive, typical challenge organisms that may be employed are listed in *Table 5*.

Table 5. Typical Challenge Organisms

AOAC Challenge Organisms	Typical Environmental Isolates
Bactericide: *E. coli,* ATCC 11229; *S. aureus,* ATCC 6538; *P. aeruginosa,* ATCC 15442	Bactericide: *M. luteus*, *S. epidermidis*, *Coynebacterium jeikeium*, *P. vesicularis*
Fungicide: *C. albicans,* ATCC 10231 or 2091; *Penicillium chrysogenum,* ATCC 11709; *A. brasiliensis*, ATCC 16404	Fungicide: *P. chrysogenum, A. brasiliensis*
Sporicide: *B. subtilis,* ATCC 19659	Sporicide: *B. sphaericus*, *B. thuringiensis*

Because a wide range of different materials of construction are used in clean rooms and other controlled areas, each material needs to be evaluated separately to validate the efficacy of a given disinfectant. *Table 6* contains a list of common materials used in clean room construction.

Table 6. Typical Surfaces to be Decontaminated by Disinfectants in a Pharmaceutical Manufacturing Area

Material	Application
Stainless steel 304L and 316L grades	Work surfaces, filling equipment, and tanks
Glass	Windows and vessels
Plastic, vinyl	Curtains
Plastic, polycarbonate	Insulation coating
Lexan® (plexiglass)	Shields
Epoxyl-coated gypsum	Walls and ceilings
Fiberglass-reinforced plastic	Wall paneling
Tyvek®	Equipment wraps
Terrazzo tiles	Floors

[3]AOAC International Official Methods of Analysis, 15th, 16th, and 17th editions. Arlington, VA.

Copyright (c) 2013 The United States Pharmacopeial Convention. All rights reserved.

DISINFECTANTS IN A CLEANING AND SANITIZATION PROGRAM

The selection of suitable disinfectants and the verification of their effectiveness in surface challenge testing is critical in the development of a cleaning and sanitization program.

Issues associated with the successful implementation of such a program are the development of written procedures, staff training, decisions on disinfectant rotation, institution of application methods and contact times, environmental monitoring to demonstrate efficacy, and personnel safety.

The cGMP 21 CFR 211.67, *Equipment Cleaning and Maintenance,* details the requirements for written procedures for cleaning, maintenance, and sanitization of pharmaceutical manufacturing equipment. These procedures should address the assignment of responsibility, establishment of schedules, details of cleaning operations, protection of clean equipment prior to use, inspection for cleanliness immediately prior to use, and maintenance of cleaning and sanitization records.

Staff involved in disinfection require training in microbiology, industry practices for cleaning and sanitization, safe handling of concentrated disinfectants, the preparation and disposal of disinfectants, and appropriate application methods. It should be emphasized that the preparation of the correct dilutions is critical because many disinfectant failures can be attributed to use of disinfectant solutions that are too dilute. Typically disinfectants used in aseptic processing and filling areas are diluted with Sterile Purified Water, and are prepared aseptically. Alternately, the disinfectant may be diluted with Purified Water, and then sterile filtered to eliminate microorganisms that may potentially persist in a disinfectant. Diluted disinfectants must have an assigned expiration dating justified by effectiveness studies.

The rotation of an effective disinfectant with a sporicide is encouraged. It is prudent to augment the daily use of a bactericidal disinfectant with weekly (or monthly) use of a sporicidal agent. The daily application of sporicidal agents is not generally favored because of their tendency to corrode equipment and because of the potential safety issues with chronic operator exposure. Other disinfection rotation schemes may be supported on the basis of a review of the historical environmental monitoring data. Disinfectants applied on potential product contact surfaces are typically removed with 70% alcohol wipes. The removal of residual disinfectants should be monitored for effectiveness as a precaution against the possibility of product contamination.

The greatest safety concerns are in the handling of concentrated disinfectants and the mixing of incompatible disinfectants. For example, concentrated sodium hypochlorite solutions (at a concentration of more than 5%) are strong oxidants and will decompose on heating, on contact with acids, and under the influence of light, producing toxic and corrosive gases including chlorine. In contrast, dilute solutions (at a concentration of less than 0.5%) are not considered as hazardous. Under no circumstances should disinfectants of different concentrations be mixed. Material Safety Data Sheets for all the disinfectants used in a manufacturing area should be available to personnel handling these agents. Appropriate safety equipment such as face shields, safety glasses, gloves, and uniforms must be issued to personnel handling the disinfectant preparation, and personnel must be trained in the proper use of this equipment. Safety showers and eye wash stations must be situated in the work area where disinfectant solutions are prepared.

⟨1079⟩ GOOD STORAGE AND DISTRIBUTION PRACTICES FOR DRUG PRODUCTS

INTRODUCTION

This general information chapter describes good storage and distribution practices to ensure that drug products (medicines) reach the end user (practitioners and patient/consumers) with quality intact.

In the context of this chapter, the following definitions are used.

Definitions

Adulteration: FDA FDC Act, SEC. 501 (351), A drug or device shall be deemed to be adulterated, if (2)(A) It has been prepared, packed, or held under insanitary conditions it may have been contaminated with filth, or whereby it may have been rendered injurious to health; or (B) the methods used in, or the facilities or controls used for, its manufacture, processing, packing, or holding do not conform to or are not operated or administered in conformity with current good manufacturing practice to assure that such drug meets the requirements of this Act as to safety and has the identify and strength, and meets the quality and purity characteristics, which it purports or is represented to possess.

Continuous improvement: Recurring activity to increase the ability to fulfill requirements (see *Quality Management Systems—Fundamentals and Vocabulary. ISO Standard 9000:2005*).

Distribution: Refers to elements such as shipping and transportation activities that are associated with the movement and supply of drug products.

Distribution Management System: A program that covers the movement, including storage and transportation, of drug products.

Documentation: Recorded information.

Drug products: Medicines, including marketed human and veterinary prescription finished dosage medications, in-process/intermediate/bulk materials, drug product samples, clinical trial materials, over-the-counter products (OTC).

Accessed from 167.78.4.19 by James Cumbie (ocean22) on Mon Sep 09 15:04:23 EDT 2013

End user: The patient as well as the healthcare provider administering the drug product to the patient.
Environmental Management System: A management system that allows for the identification of quality critical environmental aspects (such as temperature, humidity, and/or other environmental factors) for the drug product and ensures that adequate processes to maintain that environment are in place.
Hazardous materials and/or dangerous goods: Any item or chemical which, when being transported or moved, is a risk to public safety or the environment, and is regulated as such under any of the following: Hazardous Materials Regulations (49 CFR 100–180); International Maritime Dangerous Goods Code; Dangerous Goods Regulations of the International Air Transport Association; Technical Instructions of the International Civil Aviation Organization; or the U.S. Air Force Joint Manual, *Preparing Hazardous Materials for Military Air Shipments.*
International Conference on Harmonization (ICH) Guidance for Industry, *Q10 Pharmaceutical Quality System; ICH Q9, Quality Risk Management; and, ICH Q1A R2, Stability Testing of New Drug Substances and Products*: Internationally harmonized documents intended to assist the pharmaceutical industry.
Mean Kinetic Temperature (MKT): The single calculated temperature at which the total amount of degradation over a particular period is equal to the sum of the individual degradations that would occur at various temperatures.
Preventive actions: The measures to eliminate the cause of a potential nonconformity or other undesirable potential situation.
Quality: The physical, chemical, microbiological, biological, bioavailability, and stability attributes that a drug product should maintain in order to be deemed suitable for therapeutic or diagnostic use. In this chapter, the term is also understood to convey the properties of safety, identity, strength, quality, and purity.
Quality Management System (QMS): In the context of this chapter, minimally a set of policies, processes, and procedures that enable the identification, measurement, control, and improvement of the distribution and storage of drug product. It is the management system used to direct and control a company with regard to quality (see ICH Q10 model and *Quality System—Fundamentals and Vocabulary, ISO Standard 9000:2005*).
Risk Management System: A systematic process used to assess, control, communicate, and review risks to the quality of a drug product across the product lifecycle. Integral to an effective pharmaceutical quality system, it is a systematic and proactive approach to identifying, scientifically evaluating, and controlling potential risks to quality as described in ICH Q10. It facilitates continual improvement of process performance and product quality throughout the product lifecycle. ICH Q9 Quality Risk Management provides principles and examples of tools that can be applied to different aspects of pharmaceutical quality.
Written Agreement or Contract (commonly referred to as a Quality Agreement, Technical Agreement, Service Level Agreement, or other): A negotiated, documented agreement between the drug product owner and service provider that defines the common understanding about materials or service, quality specifications, responsibilities, guarantees, and communication mechanisms. It can be either legally binding or an information agreement. A Service Level Agreement may also specify the target and minimum level of performance, operation, or other service attributes.
Storage Management System: A program that is used to control the storage of drug products.
Supply chain: The continuum of entities spanning the storage and distribution lifecycle of a product to the end user.
Temperature stabilizer: A material or combination of materials that stores and releases thermal energy used to maintain a specified temperature range within an active or passive packaging container or system (e.g., water-, chemical-, or oil-based phase change material, such as carbon dioxide solid/dry ice and liquid nitrogen).
Transport vehicles: Vehicles used in the supply chain including semitrailer trucks, vans, trains, airplanes, sea vessels, and mail delivery vehicles. Other vehicles, when used to transport drug products are included here, such as emergency medical service vehicles and industry representatives' automobiles.

SCOPE

Good storage and distribution practices apply to all organizations and individuals involved in any aspect of the storage and distribution of all drug products, including but not limited to the following:

- Manufacturers of drug products for human and veterinary use where manufacturing may involve operations at the application holder's facilities (i.e., facilities that belong to the holder of an approved New Drug Application or Abbreviated New Drug Application) or at those of a contractor for the applicant holder
- Packaging operations by the manufacturer or a designated contractor for the applicant holder
- Repackaging operations in which the drug product may be owned by an organization other than the primary manufacturer
- Laboratory operations at the manufacturer's or at the contractor's site
- Physician and veterinary offices
- Pharmacies including but not limited to retail, compounding, specialty, mail order, hospital, and nursing home pharmacies
- Importers and exporters of Record
- Wholesale distributors; distribution companies involved in automobile, rail, sea, and air services
- Third-party logistics providers, freight forwarders, and consolidators
- Health care professional dispensing or administering the drug product to the end user
- Mail distributors including the U.S. Postal Service (USPS) and other shipping services including expedited shipping services

The information is intended to apply to all drug products regardless of environmental storage or distribution requirements.

It is recognized that conceivably there are special cases and many alternative means of fulfilling the intent of this chapter and that these means should be scientifically justified. Although this chapter is not intended to address the storage and distribution of active pharmaceutical ingredients (APIs), excipients, radioactive products, reagents, solvents, medical devices, medical gases, or clinical trial materials for which storage requirements may not yet be defined (e.g., Phase I clinical trial drug products), the general principles outlined here may be useful if applied selectively or comprehensively.

This general information chapter does not supersede or supplant any applicable national, federal, and/or state storage and distribution requirements, or USP monographs. General Chapter ⟨659⟩ *Packaging and Storage Requirements* contains definitions for

Copyright (c) 2013 The United States Pharmacopeial Convention. All rights reserved.

storage conditions. This chapter is not intended to cover counterfeiting, falsified medicines, drug pedigrees, or other supply chain security, including chain of custody issues.

BACKGROUND INFORMATION

Storage and distribution processes may involve a complex movement of product around the world, differences in documentation and handling requirements, and communication among various entities in the supply chain. The translation of best practices into good storage and distribution meets these challenges and sets forth a state of control.

The good storage and distribution practices described in this chapter should facilitate the movement of drug products throughout a supply chain that is controlled, measured, and analyzed for continuous improvements and should maintain the integrity of the drug product in its packaging during storage and distribution.

RESPONSIBILITIES

The holder of the drug product application, the drug product manufacturer (in the case of many OTCs, where there is no application) and the repackager bear primary responsibility and accountability including but not limited to the following:

- The decision for regulatory submissions, where applicable, relative to the contents of this chapter for the storage and distribution of drug products. If breaches occur in any of the QMS systems and cannot be justified or documented with scientific evidence, the appropriate entity should consider action with the product to ensure the public safety.
- Determining proper storage and handling practices
- Communicating storage and distribution practices through the supply chain
- Drug product stability profiles or the associated stability information from the holder, inclusive of distribution conditions and excursions that may be allowable should they occur. These stability profiles include the approved storage conditions for the shelf life of the drug product and, where appropriate, supporting data for the distribution conditions, if these differ from the storage conditions.
- Appropriate firms, such as an applicant holder, are to convey relevant environmental requirements (e.g., when appropriate, product-specific lifecycle stability data), when needed to support deviations or temperature excursions. If stability data cannot be reviewed or is not shared, an assessment may be needed to consider regulatory review or other appropriate actions (e.g., destruction of product or additional stability testing).
- Recalling the drug product if it is found to be adulterated in any part of the supply chain

However, all organizations along the supply chain bear responsibility for ensuring that they handle drug products within adequate storage and distribution parameters that will not affect the drug product identity, strength, quality, purity, or safety.

Each holder of drug product is responsible and accountable for the receipt from an entity and transfer out of the drug product to the next entity.

LABELING CONSIDERATIONS FOR DRUG PRODUCTS

The environmental requirements for drug product storage conditions should be indicated on the drug product primary container–closure system. If space on the immediate container is too small (e.g., an ampule) or is impractical for the container–closure system (e.g., blister package), this information can be placed on the most immediate container of appropriate size (e.g., carton). Environmental storage conditions and/or environmental warning statements should be evident, securely fixed, and indelible on the outermost container (generally the shipping container).

Products classified as hazardous materials and/or dangerous goods by the U.S. Department of Transportation or other relevant authorities or bodies should be labeled, stored, and handled in accordance with applicable federal/state/local regulations. Drug products classified as controlled substances by the U.S. Drug Enforcement Administration or by individual state requirements should be labeled and handled in accordance with applicable regulations.

Good practices and controls for labeling should provide the receiver with instructions for the correct handling of the drug product upon receipt. When a drug product's storage conditions are not readily available, use the storage conditions described in USP's *General Notices and Requirements* or the applicable USP monograph; or, contact the drug manufacturer for further information.

Product labels with expanded information beyond the single long-term storage temperature ensure ease of transport and use for shippers, distributors, healthcare professionals, and patients. Product labels should clearly define the storage temperature range, and broader distribution or in-use temperature ranges where allowable. Products labeled "Keep in a cold place" or "Do not freeze" are subject to interpretation and are discouraged if used without accompanying temperature ranges. USP storage definitions and temperature ranges are defined in *General Notices and Requirements*.

During international transport, the proper language(s) should be used to ensure that handlers understand the requirements set forth on drug product labeling. The use of symbols that are recognized by international organizations is advisable.

Drug products can be transported at temperatures outside of their labeled storage temperatures if stability data and relevant scientific justification demonstrate that product quality is maintained. The length of the stability studies and the storage conditions for a drug product should be sufficient to cover the shipment, distribution, and subsequent use of the drug product. The data gathered from ICH, Q1A R2, accelerated testing or from testing at an ICH intermediate condition may be used to evaluate the effect of short-term excursions outside of the label storage conditions that might occur during storage and/or distribution.

Accessed from 167.78.4.19 by James Cumbie (ocean22) on Mon Sep 09 15:04:23 EDT 2013

QUALITY MANAGEMENT SYSTEM

Good storage and distribution practices require that entities involved in the storage and/or distribution of drug products maintain a Quality Management System (QMS) that is based on standard quality concepts, includes good manufacturing practice (GMP) in compliance with the appropriate regulatory agency(s), and is complementary to the ICH quality guidances, including ICH *Q10 Pharmaceutical Quality System* and ICH *Q9 Quality Risk Management*. In the context of this chapter, the QMS includes the following management system programs: (1) *Storage Management System*, (2) *Distribution Management System*, (3) *Environmental Management System*, and (4) *Risk Management System*.

The storage and distribution QMS should, at minimum, cover the following elements: corrective and preventive actions (CAPA), change management, deviation/investigation management, and the management review process.

Written agreements (e.g., Quality Agreement, Technical Agreement, Service Level Agreements) should be in place between applicable organizations involved in the drug product supply chain. This means that the originating manufacturer may not be required to hold a Written Agreement with all parties in the supply chain. The use of written agreements ensures clarity and transparency, and delineates the responsibilities of each organization in the supply chain.

Good Documentation Practices

Good documentation practices should be practiced in the QMS. This documentation includes standard operating procedures and corporate policies and standards, as well as protocols and other written documents that delineate the elements of the QMS. The QMS programs should describe events and actions that must be documented as well as the proper verbiage to be used, the copies required, and any other items that will ensure adequate processing of the drug product and prevent delays. The documentation process should use a standard such as a quality manual or other practice and, should include routine assessment for review and update as needed.

Written procedures should ensure that drug products are held in accordance with their labeling instructions and associated regulatory requirements. Procedures should provide the written steps needed to complete a process and ensure consistency and standard outcomes. The following elements should be included: (1) how and when a product should be moved from one transport container/vehicle into another, (2) how products are handled when equipment malfunctions or when there are delays in distribution due to Customs hold, and (3) how to communicate with the necessary parties.

The QMS should require monitoring of processes to demonstrate that a state of control is being maintained, where the set of controls consistently provides assurance of continued process performance and product quality (ICH Q10).

If deviations occur, a nonconformance should be documented, and investigation should be performed and documented as appropriate. The investigative process should determine the root cause(s) of the deviation. For example, the following should be determined: whether the drug product experienced stress, damage, delays, or environmental lapses, or whether there were errors in documentation. The associated supply quality management staff should have final responsibility for approving or rejecting the investigation. The investigation process should be linked to the risk management program to ensure that proper mitigation occurs and preventive measures are put in place.

For example, a written investigation should be performed if the receiving and/or transferring processes result in a drug product being subjected to unacceptable temperature conditions or contamination (e.g., pests, microorganisms, or moisture). Any breach of standard operating procedures should be documented with a risk justification as needed. This information should be forwarded to the appropriate organization responsible for the drug product. The drug product should be quarantined, and final disposition should be based on good science with appropriate evidence to justify the decision(s).

Manufacturers should develop written procedures for recording the security process that confirms container–closure integrity for drug products that require special handling, such as security seals for controlled substances. Returned and salvaged goods records should address how the drug product is assessed through a written procedure. In addition, training on such procedures should be part of the QMS.

Records should be retained for purchases and sales of drug products and should show the date of purchase or supply; the name of the drug product and the amount; the name and address of the supplier or consignee; and the associated lot numbers. These records should allow for the traceability of a drug product in the supply chain.

All records and documents should be maintained in accordance with a traceable records-retention program and should be made available upon request to regulatory agencies. These documents should be approved, signed, and dated by the department responsible for the QMS.

Storage Management System

STORAGE LOCATIONS AND PROCESSES

It is important that each entity define their appropriate storage locations to ensure that adequate controls are in place. These locations include buildings and facilities for drug product storage (e.g., warehouse, storage or hold area, the original manufacturer's warehouses, contractor warehouses, wholesale distribution warehouses, mail order or retail pharmacy storage area, hospital or nursing home pharmacy storage areas; and border Customs storage areas).

In these locations, two basic processes can occur. First, receiving for storage is the act of bringing a drug product into a facility, while transferring refers to the moving of a drug product internally within a facility or into or out of a vehicle. Second, storing and

Copyright (c) 2013 The United States Pharmacopeial Convention. All rights reserved.

holding refers to the act of maintaining temporary possession of a drug product in the supply chain process, during which no movement of the product will occur.

STORAGE IN BUILDINGS AND FACILITIES

Drug product storage areas are required to maintain the product temperature between the limits as defined on the product label. Buildings and facilities used for the warehousing, storage, and/or holding of drug products should be of adequate size for their intended use. These facilities should be adequate to prevent overcrowding. The building and facility should be designed to control environmental conditions where necessary and should be made of readily or easily cleanable materials. Sanitation and pest control procedures should be written, indicating frequency of cleaning and the materials and methods used. The pest-control program should ensure the prevention of contamination as well as the safe use of pesticides. Records of all cleaning and pest-control activities should be maintained.

Storage should be orderly and should provide for the segregation of approved, quarantined, rejected, returned, or recalled drug product. If computerized systems are used for the control of storage conditions, the software should be appropriately qualified for its intended purposes. Facilities should have controls that mitigate risks such as fire, water, or explosion. Certain drug products may cause these risks and should be stored accordingly. Storage areas, when not computerized, should be appropriately visually labeled.

Storage facilities themselves, unless thermostatically controlled, cannot be validated; however, they can be qualified via a mapping process. The generator back-up power supply should be qualified.

RECEIVING AND TRANSFERRING DRUG PRODUCTS

Storage of a drug product includes not only the period during which the drug product is held in the manufacturer's storage areas but also time spent at the receiving bay area. When drug products arrive at warehouse loading docks and other arrival areas, they should be transferred as quickly as possible to a designated storage or within a time period that is consistent with the risk and exposure of the product in the receiving area to a designated storage environment to ensure minimal time outside specified storage conditions as described in a written procedure.

Relative to the incoming receipt of drug product, it is recognized that the process of product reaction to ambient conditions begins immediately and may occur quickly (e.g., reach temperature equilibrium within minutes to a few hours depending on details such as the product mass, volume, and packaging density taking into account secondary and tertiary packaging)[1]. Time spent in a transport vehicle is considered to be part of the distribution process and is not a storage location.

Receiving docks should protect drug product deliveries from inclement weather during unloading. Any storage area, including loading and unloading docks for receipt and distribution of drug products, should be clean, cleanable, and free from pests. The incoming receiving area should limit access to authorized persons. Where appropriate, the delivery vehicle/container should be examined before unloading to ensure that adequate protection from contamination was maintained during transit. Deliveries should be examined at receipt in order to check that containers are not damaged and that the consignment corresponds to the order. The results of this examination should be documented.

Areas should be designated to provide an adequate space in which containers of drug products can be cleaned and opened for sampling. If sampling is performed in the receiving area, it should be done in a manner that prevents contamination and cross-contamination and ensures that environmental requirements for the drug product are not breached.

Adequate precautions should be taken to prevent theft and diversion of drug products. Drug products that have been identified as counterfeit should be quarantined to prevent further distribution. The appropriate regulatory agencies should be contacted according to established procedures.

Appropriate delivery records (e.g., as applicable, transport vehicle movement papers, receiving/delivery records, data logging records, temperature recorders and similar devices, bill of lading, house air waybill, master air waybill, etc.) should be reviewed by each receiving entity in the supply chain to determine if the product has been subjected to any transportation delays or other events that could have exposed the product to undesirable conditions. Each entity should ensure that their respective Service Level Agreement documents and supporting documents such as SOPs cover delivery and receiving responsibilities of the transactional parties.

Smoking, eating, and drinking should not be permitted in any storage/hold areas.

REFRIGERATORS AND FREEZERS

Refrigerators and freezers used to store drug products are required to maintain the product temperature between the limits as defined on the product label. Typically, a refrigeration unit specification would be set to 5° with an allowable range of ±3° to store products labeled 2°–8°. Freezer temperatures may vary and typically range from −25° to −10°. Some frozen drug products, however, require lower temperatures, e.g., dry ice or liquid nitrogen temperatures.

Regular operating procedures and maintenance protocols should be in place along with written contractual agreements for all maintenance and evaluation procedures including the following:

1. Items should be stored in the units in a manner that allows adequate air flow to maintain the specified conditions.
2. Units should be positioned in the facility so that they are not subjected to environmental extremes that could affect their performance. If this cannot be prevented, the mapping protocol should include a provision for testing during the anticipated environmental extremes.

[1] JP Edmond, *Study for Temperature Sensitive Product: Preliminary Testing*, October 2009, University of Florida.

Accessed from 167.78.4.19 by James Cumbie (ocean22) on Mon Sep 09 15:04:23 EDT 2013

3. Large commercial units such as walk-in cold rooms are qualified via a temperature mapping study or other type of qualification process to determine the unit's suitability for storing drug products. A suitable number of temperature-recording devices should be utilized to record temperatures and to provide temperature area maps. Thereafter, the units should be monitored as determined by the results of the mapping study. Refer to the *Temperature Monitoring* section under *Environmental Management System*.
4. Units should utilize recording systems to log and track temperatures. Alarm systems should be an integral part of the monitoring system for both refrigerators and freezers. While automated systems monitor units continuously, manual checks should be performed as appropriate to the validation program. When automated systems are not available, manual systems may be used.

Distribution Management System

Distribution of drug products occurs within a facility or location such as a manufacturer, wholesaler, pharmacy dispensing area, retail site, clinic/hospital/nursing home pharmacy, and the physician's practice. Distribution of drug products occurs as point-to-point movement within the supply chain between distribution facilities via semitrailer trucks, vans, emergency medical service vehicles, industry representatives' automobiles, trains, aircraft, sea vessels, and mail delivery vehicles.

Communication within the supply chain should be coordinated to determine proper timing for drug products to be transported and received, taking into account holiday schedules, weekends, or other forms of interruption. When international distribution is required, alerts should be made in advance and proper language should be used to ensure understanding of the requirements set forth on drug product labeling.

PACKAGING FOR THE DISTRIBUTION AND TRANSPORTATION PROCESSES

Pharmaceutical manufacturers should consider primary, secondary, and tertiary packaging that best protects the drug product during storage and distribution. Package performance testing should be documented as part of a manufacturer's QMS. Several standard test procedures are available for evaluating package performance for factors such as shock, vibration, pressure, compression, and other transit events. Organizations with standard test methods include the following: the American Society for Testing and Materials (ASTM) *Standard Practice for Performance Testing of Shipping Containers and Systems*, and the International Safe Transit Association (ISTA) specifications for various types of transit modes such as less-than-truckload, small package, rail car, and air freight.

It is important to be aware that removal or modification of the original packaging may subject the product to unacceptable conditions.

The packaging (tertiary or thereafter) for the distribution of the drug product should be selected and tested to ensure that product quality is maintained and to protect the contents from the rigors of distribution including environmental or physical damage.

All drug products have storage requirements that may contain specific controls. The container used for transporting the drug product should be qualified on the basis of the labeled conditions of the product as well as anticipated environmental conditions. Consideration should be made for seasonal temperature differences, transportation between hemispheres, and the routes and modes of transport.

The type, size, location, and amount of the temperature stabilizers required to protect the product should be based on documented studies of specific distribution environments including domestic and international lanes, mode(s) of transport, duration, temperature, and other potential environmental exposures or sensitivities that may impact product quality. Transportation container materials such as warm/cold packs and materials used to control temperature conditions should be properly conditioned before use. Barrier protection may be important in helping to determine the position of materials such as gel packs in order to avoid direct contact with the drug product. It should be determined if studies are required to ensure that the dry ice and its vapors do not adversely affect the drug product, including the drug product labeling.

VALIDATION AND THERMAL PERFORMANCE QUALIFICATION FOR TRANSPORT SYSTEMS

Drug product transport systems should be continuously monitored by calibrated monitoring systems, (continuous verification), or shipping systems should be qualified and based on historical data relative to the process. However, it may be acceptable to use product stability data and supply chain risk assessment to justify shipping without either continuous monitoring or qualification of the shipping system.

Operational and performance shipping studies should on a generic level be part of a formal qualification protocol that may use controlled environments or actual field testing, depending on the projected transport channel. These studies should reflect actual load configurations, conditions, and expected environmental extremes. Testing should be performed on both active and passive thermal packaging systems.

Environmental Management System

While storage and distribution temperature ranges for drug products are labeled on the packaging, relative humidity effects occur over a much longer time frame. The primary container is designed and tested to protect the product from moisture; therefore, humidity monitoring should be considered when a product will be stored in an uncontrolled facility.

Copyright (c) 2013 The United States Pharmacopeial Convention. All rights reserved.

TEMPERATURE MONITORING

Environmental conditions are important parameters to consider in the storage and distribution of all drug products and may require monitoring depending on the requirements. When specific storage conditions are required and transportation qualification has not been performed, and in the absence of active or passive containers, environmental recorders or devices should be used to confirm that an acceptable range has been properly maintained during each stage in the supply chain.

Temperature is one of the most important conditions to control, and requirements for each drug product should be based on stability data. Temperatures should be tracked using a monitoring system, and the monitoring devices used should be included in a calibration and/or preventive maintenance program. Environmental monitoring devices should be calibrated for their range of operation. The monitoring devices used should provide an alert mechanism if the preset ranges are breached. The following practices and controls are examples of appropriate measures that should be put in place to ensure environmental control (see also *Monitoring Devices—Time, Temperature, and Humidity* ⟨1118⟩):

- Temperature-monitoring equipment, a monitoring device, a temperature data logger, or other such device that is suitable for its intended purpose should be used.
- An appropriate number of temperature monitors or some other form of recordation or proof of temperature control. Temperature monitor(s) should be used with every distribution process unless another process has been put in place to ensure specified temperature ranges.
- Electronic temperature monitors should be calibrated to National Institute of Standards and Technology (NIST) or other suitable standard.
- Chemical temperature indicators may be used as appropriate.
- Predetermined temperature ranges should be set for all applicable areas, as well as a plan of action in the event of an unacceptable excursion.

TEMPERATURE MAPPING

The basis of any temperature mapping in a temperature controlled space (e.g., facility, vehicle, shipping containers, refrigerator, freezer) is the identification and documentation of a sound rationale used for a given mapping procedure. The temperature variability associated with mapped locations and the level of thermal risk to the product should be defined, unless another process has been put in place to ensure environmental control.

A temperature mapping study should be designed to assess temperature uniformity and stability over time and across a three-dimensional space. Completing a three-dimensional temperature profile should be achieved by measuring points at not less than three dimensional planes in each direction/axis—top-to-bottom, left-to-right, front-to-back, where product will be present.

When temperature mapping is necessary, it should begin with an inspection of the facility, equipment and/or vehicle and should be re-evaluated as appropriate. Environmental mapping also should be performed after any significant modification to the distribution system that could affect drug product temperature.

Facility temperature mapping: The following factors, which may contribute to temperature variability, should be considered during the process of temperature mapping storage locations: (1) size of the space; (2) location of HVAC equipment, space heaters, and air conditioners; (3) sun-facing walls; (4) low ceilings or roofs; (5) geographic location of the area being mapped; (6) airflow inside the storage location; (7) temperature variability outside the storage location; (8) workflow variation and movement of equipment (weekday vs. weekend); (9) loading or storage patterns of product; (10) equipment capabilities (e.g., defrost mode, cycle mode); and (11) SOPs.

The recording of temperatures during the thermal mapping of a warehouse or cold room should be sufficient in time frame to capture workflow variation that may impact air flow and the resulting temperature fluctuation (i.e., a period of one week is recommended for data collection and should capture workflow cycles).

Equipment (container/trailer) temperature mapping: To minimize risk of product exposure to damaging temperatures during transport, dedicated containers/vehicles cargo space should be mapped. When complete fleet mapping (i.e., wholesaler or distributor vehicles) is not realistic or appropriate, minimally at least one container/vehicle from the fleet must be mapped. Thereafter, the following conditions should be considered: (1) SOPs, including loading and unloading procedures; (2) route-specific operation of the temperature control equipment; (3) seasonal effects encountered on expected routes; (4) loading patterns; and (5) transport durations.

When nondedicated (i.e., mail carriers) transport containers/vehicles and equipment are used, they should be designed to minimize the risk of contamination of the product being handled. If environmental mapping of such vehicles is not performed, some other means of control should be in place to ensure that the drug product is adequately protected. Mapping by the shipper may not be necessary if the shipper uses a transport container that is properly insulated and has been previously qualified for the duration of the distribution process by the transport container manufacturer via a mapping study or if drug products are continuously monitored by calibrated monitoring systems (continuous verification).

The vehicle in which drug products are transported should be mapped to determine the appropriate placement of temperature-recording devices and to confirm that the load configuration is not restricting air flow. The following are recommended practices and controls for vehicles that receive and transfer drug products:

1. Transport containers/vehicles and equipment used to store and transport drug products should be suitable for their intended function.
2. Procedures should be established that describe how to operate, clean, and maintain transport containers/vehicles and equipment used in the storage and distribution of drug products.

Accessed from 167.78.4.19 by James Cumbie (ocean22) on Mon Sep 09 15:04:23 EDT 2013

3. Transport containers/vehicles should be designed to prevent damage to the drug product, and pharmaceutical manufacturers should collaborate with their transporter to determine contingency response plans for how drug products are handled when equipment malfunction.
4. When drug product must be moved from one transport container/vehicle into another, the proper load configuration should be followed.
5. It should be understood how communication is made to the necessary entities when such transfer occurs.
6. Subcontracted vehicles should be considered in contractual agreements and audits, and documentation should be maintained for their use.

Temperature mapping should account for maximum and minimum loads to capture temperature variability resulting from variations in temperature mass of the payload. Performance of equipment under extreme scenarios including door open, door closed, and simulated equipment failure should be taken into account.

Thermal mapping of vehicles should be representative of the fleet with the intention of capturing variability across the range of vehicles (type of vehicle including non-refrigerated equipment, use, heating and/or cooling system). A periodic requalification program should be documented.

Mapping for both facilities and transportation containers/vehicles should be done in a way that confirms their fitness for operation during periods of expected extreme weather (e.g., summer and winter). Facilities should be mapped under varying operating conditions—ideally during periods of greater variability, accounting for and capturing the result of any seasonal fluctuations of inventory movement, equipment movement, or workflow variation.

The temperature-mapping protocol and associated number of temperature data loggers used to map a three dimensional space should meet the intent of demonstrating three-dimensional uniformity and compliance with product requirements. For both facility and trailer/container temperature mapping, the ambient conditions should be recorded and correlations between ambient conditions and potential thermal risks inside the controlled space should be identified. Drug products should not be stored in areas where a thermal risk has been identified as a result of the temperature mapping. Areas identified as being unsuitable for storage should be clearly labeled as such to ensure that they are not used.

Temperature data loggers should be used for temperature mapping and PQ testing of facilities, equipment, and transportation containers used for storage or transportation of temperature-sensitive medicinal products. Temperature data loggers and any associated software applications should be appropriately validated. Certificates of calibration to an NIST or other international traceable standard should be available for individual monitoring devices.

EXCURSIONS

The mapping process will help determine when excursions could occur and are useful when pharmaceutical manufacturers develop a plan for dealing with them. Alarms should be used to reveal environmental excursions during operations. Temperature excursions for brief periods outside of respective storage label conditions may be acceptable provided stability data and scientific/technical justification exists demonstrating that product quality is not affected (see Health Canada's GUI 0069 entitled, *Guidelines for Temperature Control of Drug Products During Storage and Transportation,* 2011).

MEAN KINETIC TEMPERATURE (MKT) CALCULATION

The MKT is the single calculated temperature at which the total amount of degradation over a particular period is equal to the sum of the individual degradations that would occur at various temperatures. MKT may be considered as an isothermal storage temperature that simulates the non-isothermal effects of storage temperature variation. It is not a simple arithmetic mean.

The temperatures used for calculating MKT can be conveniently collected using electronic devices that measure temperatures at frequent intervals (e.g., every 15 minutes). MKT can be calculated directly or the data can be downloaded to a computer for processing. Software to compute the MKT is available commercially.

For dispensing sites, such as pharmacies and hospitals, where the use of such instruments may not be feasible, devices such as high-low thermometers capable of indicating weekly high and low temperatures may be employed. The arithmetic mean of the weekly high and low temperatures is then used in the calculation of MKT. MKT is calculated by the following equation (derived from the Arrhenius equation):

$$T_k = \frac{\Delta H/R}{-ln\left(\frac{e^{-\Delta H/RT_1} + e^{-\Delta H/RT_2} + \ldots + e^{-\Delta H/RT_n}}{n}\right)}$$

where T_k is the mean kinetic temperature; ΔH is the heat of activation, 83.144 kJ · mole^{-1} (unless more accurate information is available from experimental studies); R is the universal gas constant, 8.3144×10^{-3} kJ · mole^{-1} · degree^{-1}; T_1 is the value for the temperature recorded during the first time period, e.g., the first week; T_2 is the value for the temperature recorded during the second time period, e.g., second week; and T_n is the value for the temperature recorded during the *n*th time period, e.g., *n*th week, *n* being the total number of storage temperatures recorded during the observation period. [NOTE—All temperatures, *T*, are absolute temperatures in degrees Kelvin (K).]

Copyright (c) 2013 The United States Pharmacopeial Convention. All rights reserved.

MKT DURING STORAGE AND DISTRIBUTION

The holding of a drug may occur as part of storage and distribution practices. Drug products in the distribution supply chain may be held at temperatures outside their labeled storage requirements as determined by an appropriate stability study. Drug products stored either in warehouse conditions or in transportation modes may experience excursions from their acceptable temperature ranges. Each product excursion must be evaluated to determine the final product effect. The means of evaluation must be scientifically sound with documented technical justification that the integrity of the drug product has not been affected. One method of analysis for drug product stored outside its respective label storage conditions is the use of an MKT calculation.

Because MKT expresses the cumulative thermal stress a drug product experiences, it is considered an acceptable practice for storage, and it follows that it should be considered for transit excursions in the process of distribution. The calculation must be justified for use with distribution excursions by confirming that the stability limiting characteristic of the product follows first order kinetics over the temperature range encountered. The ICH stability-testing guidelines define MKT as a "single" derived temperature, which, if maintained over a defined period, would afford the same thermal challenge to a pharmaceutical product as would have been experienced over a range of both higher and lower temperatures for an equivalent defined period.

The MKT analysis must be based on good science and should take into account the integrity of the product. The calculated MKT is not sensitive to the impact of excursions that may occur if the baseline is a long period of time such as a storage segment or the entire lifetime of the drug product. For shorter baseline periods of time, such as transport segments, an excursion can have a significant impact on the resulting MKT for that segment; however, this would not necessarily have a significant impact on product quality.

The MKT analysis may be used for storage conditions that have exceeded the acceptable parameters for a drug product, for a short period of time and is not intended to be a measure for long-term storage.

Knowing the MKT for an excursion is useful for evaluating the potential impact on product quality. However, it is also essential to know the upper and lower temperature limits of any excursion. If these extreme temperatures are outside available stability data, it may not be possible to predict the quality impact of the excursion with any confidence regardless of the MKT. Although higher temperatures are given greater weight in the calculation, the calculation of MKT for nonfrozen product that becomes frozen for any amount of time may not result in an acceptable temperature although the product may not be adulterated. At higher temperatures the kinetics of degradation may change or new degradation reactions may occur; at lower temperatures (near freezing) a phase change may occur that is known to have a negative impact on the quality of some drug products (e.g., some proteins and vaccines). For an example of a calculation, see *Pharmaceutical Calculations in Prescription Compounding* ⟨1160⟩.

Emergency Medical Service Vehicles, Automobiles, and Van Transportation

Road vehicles used to transport drug products (e.g., ambulances and other emergency response vehicles, vans, or automobiles, including those used by sales representatives to transport physicians' samples) should be suitable for their purpose. Monitoring devices should be placed in different areas of the trunk or cabin where the drug product will be positioned during seasonal extremes (e.g., summer and winter). The monitor should be secured so that it is immobile, and there should be no ambiguity about its exact position within the payload so that the monitor is always placed in the same position. Monitoring devices used on or in packages or on containers may also be used. Suitable measures should be taken to maintain the drug product within the allowable limits of the labeled storage requirements. Storage of physician drug product samples by sales representatives is regulated under 21 CFR Part 203.34(b)(4).

Mail Order Pharmacy Distribution

The mailing party is accountable for the appropriate mailing process. Mail distributors including the U.S. Postal Service (USPS) and other shipping services including expedited shipping services are responsible to provide the service contracted.

In the event that the package cannot be delivered as scheduled, the package should be returned to the mailing pharmacy.

Risk Management System

Risk Management System strategies should ensure that each organization's best interests are served by adhering to proper practices, controls, and procedures, including but not limited to the following: the nature of the drug products; distribution requirements on the readable container labeling; exposure to adverse environmental conditions; number of stages/receipts in the supply chain; manufacturer's written instructions; contractors; and drugs at risk from freezing (vaccines, insulin, and biological products) or elevated temperatures (fatty-based suppositories, vaccines, insulin, and biological products).

Examples of risks include the following: (1) vibration that can cause aggregation of some drug products such as proteins and peptide-based drugs; (2) temperature excursions that may lead to phase changes (melting or freezing); (3) loss of container–closure integrity in transit that could cause glass fractures or loss of sterility in sterile drug product containers; and (4) ingress of water or oxygen that could lead to an increase in degradation products. Appropriate firms such as applicant holders are recommended to convey relevant environmental requirements when needed to support deviations or excursions. There may be alternate ways of determining acceptable environmental conditions and these should be documented and justified.

Pharmaceutical manufacturers should ensure that suppliers of drug product transportation are monitored. Auditing transportation firms should be carried out routinely to ensure adequate product handling. The manufacturer's change control system should capture and evaluate changes in logistic factors such as warehouse or receiving areas and vehicle changes.

Accessed from 167.78.4.19 by James Cumbie (ocean22) on Mon Sep 09 15:04:23 EDT 2013

CONCLUSION

The practices and processes set forth in this general information chapter apply to storage and distribution as part of the life-cycle management of drug products. All involved should ensure the product to its point of use, creating a contiguous supply network that is collaborative and emphasizes preventive measures to protect drug product quality. The increase in global processes coupled with products requiring special environmental controls highlights the need for a strong QM program. QM should provide the foundation for maintaining the storage and distribution practices in a continual improvement program and part of an overall management system review by each entity, as appropriate, in the supply chain.

It is equally important to stay current and be ready to change as new solutions evolve. These new technologies should be considered in developing strategies for good distribution practices, controls, and procedures.

⟨1111⟩ MICROBIOLOGICAL EXAMINATION OF NONSTERILE PRODUCTS: ACCEPTANCE CRITERIA FOR PHARMACEUTICAL PREPARATIONS AND SUBSTANCES FOR PHARMACEUTICAL USE

The presence of certain microorganisms in nonsterile preparations may have the potential to reduce or even inactivate the therapeutic activity of the product and has a potential to adversely affect the health of the patient. Manufacturers have therefore to ensure a low bioburden of finished dosage forms by implementing current guidelines on Good Manufacturing Practice during the manufacture, storage, and distribution of pharmaceutical preparations.

Microbial examination of nonsterile products is performed according to the methods given in the texts on *Microbial Enumeration Tests* ⟨61⟩ and *Tests for Specified Microorganisms* ⟨62⟩. Acceptance criteria for nonsterile pharmaceutical products based upon the total aerobic microbial count (TAMC) and the total combined yeasts and molds count (TYMC) are given in *Tables 1* and *2*. Acceptance criteria are based on individual results or on the average of replicate counts when replicate counts are performed (e.g., direct plating methods).

When an acceptance criterion for microbiological quality is prescribed, it is interpreted as follows:

— 10^1 cfu: maximum acceptable count = 20;
— 10^2 cfu: maximum acceptable count = 200;
— 10^3 cfu: maximum acceptable count = 2000; and so forth.

Table 1. Acceptance Criteria for Microbiological Quality of Nonsterile Dosage Forms

Route of Administration	Total Aerobic Microbial Count (cfu/g or cfu/mL)	Total Combined Yeasts/Molds Count (cfu/g or cfu/mL)	Specified Microorganism(s)
Nonaqueous preparations for oral use	10^3	10^2	Absence of *Escherichia coli* (1 g or 1 mL)
Aqueous preparations for oral use	10^2	10^1	Absence of *Escherichia coli* (1 g or 1 mL)
Rectal use	10^3	10^2	—
Oromucosal use	10^2	10^1	Absence of *Staphylococcus aureus* (1 g or 1 mL)
			Absence of *Pseudomonas aeruginosa* (1 g or 1 mL)
Gingival use	10^2	10^1	Absence of *Staphylococcus aureus* (1 g or 1 mL)
			Absence of *Pseudomonas aeruginosa* (1 g or 1 mL)
Cutaneous use	10^2	10^1	Absence of *Staphylococcus aureus* (1 g or 1 mL)
			Absence of *Pseudomonas aeruginosa* (1 g or 1 mL)
Nasal use	10^2	10^1	Absence of *Staphylococcus aureus* (1 g or 1 mL)
			Absence of *Pseudomonas aeruginosa* (1 g or 1 mL)
Auricular use	10^2	10^1	Absence of *Staphylococcus aureus* (1 g or 1 mL)
			Absence of *Pseudomonas aeruginosa* (1 g or 1 mL)
Vaginal use	10^2	10^1	Absence of *Pseudomonas aeruginosa* (1 g or 1 mL)
			Absence of *Staphylococcus aureus* (1 g or 1 mL)
			Absence of *Candida albicans* (1 g or 1 mL)

Copyright (c) 2013 The United States Pharmacopeial Convention. All rights reserved.

Transdermal patches (limits for one patch including adhesive layer and backing)	10^2	10^1	Absence of *Staphylococcus aureus* (1 patch)
			Absence of *Pseudomonas aeruginosa* (1 patch)
Inhalation use (special requirements apply to liquid preparations for nebulization)	10^2	10^1	Absence of *Staphylococcus aureus* (1 g or 1 mL)
			Absence of *Pseudomonas aeruginosa* (1 g or 1 mL)
			Absence of bile-tolerant Gram-negative bacteria (1 g or 1 mL)

Table 1 includes a list of specified microorganisms for which acceptance criteria are set. The list is not necessarily exhaustive, and for a given preparation it may be necessary to test for other microorganisms depending on the nature of the starting materials and the manufacturing process.

If it has been shown that none of the prescribed tests will allow valid enumeration of microorganisms at the level prescribed, a validated method with a limit of detection as close as possible to the indicated acceptance criterion is used.

Table 2. Acceptance Criteria for Microbiological Quality of Nonsterile Substances for Pharmaceutical Use

	Total Aerobic Microbial Count (cfu/g or cfu/mL)	**Total Combined Yeasts/Molds Count (cfu/g or cfu/mL)**
Substances for pharmaceutical use	10^3	10^2

In addition to the microorganisms listed in *Table 1*, the significance of other microorganisms recovered should be evaluated in terms of the following:

- The use of the product: hazard varies according to the route of administration (eye, nose, respiratory tract).
- The nature of the product: does the product support growth? does it have adequate antimicrobial preservation?
- The method of application.
- The intended recipient: risk may differ for neonates, infants, the debilitated.
- Use of immunosuppressive agents, corticosteroids.
- The presence of disease, wounds, organ damage.

Where warranted, a risk-based assessment of the relevant factors is conducted by personnel with specialized training in microbiology and in the interpretation of microbiological data. For raw materials, the assessment takes account of the processing to which the product is subjected, the current technology of testing, and the availability of materials of the desired quality.

⟨1116⟩ MICROBIOLOGICAL CONTROL AND MONITORING OF ASEPTIC PROCESSING ENVIRONMENTS

Microbiologically controlled environments are used for a variety of purposes within the healthcare industry. This general information chapter provides information and recommendations for environments where the risk of microbial contamination is controlled through aseptic processing. Products manufactured in such environments include pharmaceutical sterile products, bulk sterile drug substances, sterile intermediates, excipients, and, in certain cases, medical devices. Aseptic processing environments are far more critical in terms of patient risk than controlled environments used for other manufacturing operations—for example, equipment and component preparation, limited bioburden control of nonsterile products, and processing of terminally sterilized products. In this chapter, the type of aseptic processing is differentiated by the presence or absence of human operators. An advanced aseptic process is one in which direct intervention with open product containers or exposed product contact surfaces by operators wearing conventional cleanroom garments is not required and never permitted. [NOTE—A description of terms used in this chapter can be found in the *Appendix* at the end of the chapter.]

The guidance provided in this chapter and the monitoring parameters given for microbiological evaluation should be applied only to clean rooms, restricted-access barrier systems (RABS), and isolators used for aseptic processing. ISO-classified environments used for other purposes are not required to meet the levels of contamination control required for aseptically produced sterile products. The environments used for nonsterile applications require different microbial control strategies.

A large proportion of products labeled as sterile are manufactured by aseptic processing rather than terminal sterilization. Because aseptic processing relies on the exclusion of microorganisms from the process stream and the prevention of microorganisms from entering open containers during processing, product bioburden as well as the bioburden of the manufacturing environment are important factors governing the risk of unacceptable microbial contamination. The terms *aseptic* and *sterile* are not synonymous. *Sterile* means having a complete absence of viable microorganisms or organisms that have the potential to reproduce. In the purest microbiological sense, an *aseptic* process is one that prevents contamination by the exclusion of microorganisms. In contemporary aseptic healthcare-product manufacturing, *aseptic* describes the process for handling sterilized materials in a controlled environment designed to maintain microbial contamination at levels known to present minimal risk.

Accessed from 167.78.4.19 by James Cumbie (ocean22) on Mon Sep 09 15:04:23 EDT 2013

In any environment where human operators are present, microbial contamination at some level is inevitable. Even the most cautious clean-room environment design and operation will not eliminate the shedding of microorganisms if human operators are present. Thus, an expectation of zero contamination at all locations during every aseptic processing operation is technically not possible and thus is unrealistic. There are no means to demonstrate that an aseptic processing environment and the product-contact surfaces within that environment are sterile. Monitoring locations should be determined based upon a assessment of risk. Although manufacturers should review environmental monitoring results frequently to ensure that the facility operates in a validated state of control, monitoring results can neither prove nor disprove sterility. Because of the limitations of monitoring, manufacturers cannot rely directly on monitoring, statistics, or periodic aseptic-processing simulations to ensure a sterility assurance level.

Environmental monitoring is usually performed by personnel and thus requires operator intervention. As a result, environmental monitoring can both increase the risk of contamination and also give false-positive results. Thus, intensive monitoring is unwarranted, particularly in the ISO 5 environments that are used in the most critical zones of aseptic processing.

A number of sampling methods can be used to assess and control the microbiological status of controlled environments for aseptic processing. At present, nearly all of these methods rely on the growth and recovery of microorganisms, many of which can be in a damaged state caused by environmental stress and therefore may be difficult to recover. The numerical values for air, surface, and personnel monitoring included in this chapter are not intended to represent limits or specifications but are strictly informational. Because of the variety of microbiological sampling equipment and methods, it is not scientifically reasonable to suggest that the attainment of these values guarantees microbial control or that excursions beyond values in this chapter indicate a loss of control. The assessment of risks associated with manufacturing environments must be made over a significant period; and in each case, the contamination recovery rate metric should be established on the basis of a review of actual findings within the facility. The objective of each user should be to use contamination recovery rates to track ongoing performance and to refine the microbiological control program to foster improvements. When optimum operational conditions are achieved within a facility, contamination recovery rate levels typically become relatively stable within a normal range of variability.

There are no standard methods for air sampling, and available literature indicates that air-sampling methods are highly variable. It should not be assumed that similar sample volumes taken by different methods will produce similar rates of recovery. Many factors can affect microbial recovery and survival, and different air sampler suppliers may have designed their systems to meet different requirements. Also, sample-to-sample variation in microbial sampling can be extensive. Limited data are available regarding the accuracy, precision, sensitivity, and limits of detection of monitoring methods used in the aseptic processing of healthcare products.

Surface sampling methods are also not standardized. Different media are employed, and in the case of swabs, different results have been reported for wet and dry swab methods and contact plates. Replicate sample contact plates should be expected to give similar results under identical conditions, but rates of recovery have been reported to be both lower than expected and highly variable. In general, surface monitoring has been found to recover <50%, even when used with relatively high inoculum levels on standardized coupons. In actual production environments where organisms are stressed to varying degrees, recovery rates may be lower.

ADVANCED ASEPTIC TECHNOLOGIES

Advanced aseptic technologies can be defined as those that do not rely on the direct intervention of human operators during processing. At present, technologies such as isolators, blow/fill/seal, and closed RABS (designs that are never opened during setup or operation) may be considered advanced aseptic technologies, provided that direct intervention by gowned personnel is disallowed during processing. In recent years, isolator technology has found a broad acceptance in healthcare manufacturing. Isolators and closed RABS effectively separate the operator from the critical aseptic processing environment. Because these systems substantially reduce contamination risk, their microbiological control levels are higher than those of conventional clean rooms that have comparable particulate air classification level, for example, ISO 5.

CLEAN ROOM CLASSIFICATION FOR ASEPTIC PROCESSING ENVIRONMENTS

The design and construction of clean rooms and controlled environments are covered in ISO 14644 series. This standard defines the performance of a clean environment with respect to the concentration of total particulates per unit volume. ISO 14644-1 stipulates the total particulate counts allowed for a clean environment to meet the defined air quality classifications. The reader is referred to this standard regarding the design characteristics and certification of clean environments.

Pharmaceutical manufacturers are concerned with nonviable particulate contamination in injectable products (see *Particulate Matter in Injections* ⟨788⟩). Unlike microbial contamination in which experimental data suggest that humans are the only significant source, nonviable particulates can arise both from humans and from processing equipment. Studies indicate that gowned humans slough particulate and microbial contamination at a rather consistent rate. However, the relationship between microbial (viable) and nonviable contamination does not hold for particulates shed by processing equipment. Where equipment is the primary source of particulate matter, the resulting particulates are essentially all nonviable.

The argument that if fewer total particulates are present in a clean room, it is less likely that airborne microorganisms will be present is true only if human operators are the source of particulate matter. It is not possible to clearly distinguish between background total particulate contamination generated largely by mechanical operations and the total particulates contributed by personnel. Thus, it is both commonplace and proper for clean-room environmental monitoring programs to consist of both a total particulate component and a microbiological component. *Table 1* describes the clean room classifications commonly used in the pharmaceutical industry. In aseptic processing, clean environments of ISO 14644-1 Classes 5–8 are typically used.

Copyright (c) 2013 The United States Pharmacopeial Convention. All rights reserved.

Table 1. Airborne Total Particulate Cleanliness Classes[a]

ISO Class[b]	Particles ≥0.5 μm/m³
ISO 5	3520
ISO 6	35,200
ISO 7	352,000
ISO 8	3,520,000

[a] Taken from ISO International Standard 14644 Part 1, published by the International Organization for Standardization, May 1999.
[b] The four ISO 14644-1 classes correspond closely to former U.S. Federal Standard 209E classifications. The relationships are ISO 5/Class 100, ISO 6/Class 1000, ISO 7/Class 10,000, and ISO 8/Class 100,000.

Isolators and closed RABS present a different picture, because personnel are excluded from the aseptic processing environment and manipulations are made using glove-and-sleeve assemblies and half-suits made of thick, flexible plastic (such as polyvinyl chloride or synthetic rubber). Personnel have far less effect on the microbial quality of the environment within an isolator enclosure than in clean room environments. Some users have chosen to operate RABS in a manner that allows open, direct human intervention. In an open operational state, these systems are more similar in operation to conventional clean rooms and therefore cannot be considered advanced aseptic processing systems. In an open RABS, the ability of operators to adversely affect microbial contamination risk is higher than with closed RABS or isolators.

Specifications for air changes per hour and air velocities are not included in ISO 14644, nor were they included in Federal Standard 209E. Typically, ISO Class 8/Class 100,000 rooms are designed to provide a minimum of 20 air changes per hour; ISO Class 7/Class 10,000 rooms are designed to provide more than 50 air changes per hour; and ISO Class 5/Class 100 clean rooms provide more than 100 air changes per hour. The design of some facility criteria may differ. By diluting and removing contaminants, large volumes of air are likely to reduce airborne contamination in aseptic production. Optimum conditions vary considerably, depending on process characteristics, particularly the amount of contamination derived from personnel. These specifications should be used only as a guide in the design and operation of clean rooms, because the precise correlations among air changes per hour, air velocity, and microbial control have not been satisfactorily established experimentally.

Manufacturers should maintain a predominantly unidirectional flow of air (either vertical or horizontal) in a staffed Class 5 clean room environment, particularly when products, product containers, and closures are exposed. In the evaluation of air movement within a clean room, studying airflow visually by smoke studies or other suitable means is probably more useful than using absolute measures of airflow velocity and change rates. Risk assessment models are another useful way of reducing contamination risk and should be considered.

Air velocity and change rates are far less important in isolators or closed RABS than in clean rooms because personnel are more carefully separated from the product, product containers, and closures. Air velocities substantially lower than those used in human-scale clean rooms have proved adequate in isolator systems and may be appropriate in RABS as well. In zones within isolators where particulate matter poses a hazard to product quality, predominantly vertical or horizontal unidirectional airflow can be maintained. Experience has shown that well-controlled mixing or turbulent airflow is satisfactory for many aseptic processes and for sterility testing within isolators (see *Sterility Testing—Validation of Isolator Systems* ⟨1208⟩).

IMPORTANCE OF A MICROBIOLOGICAL EVALUATION PROGRAM FOR CONTROLLED ENVIRONMENTS

Monitoring of total particulate count in controlled environments, even with the use of electronic instrumentation on a continuous basis, does not provide information on the microbiological content of the environment. The basic limitation of particulate counters is that they measure particles of 0.5 μm or larger. While airborne microorganisms are not free-floating or single cells, they frequently associate with particles of 10–20 μm. Particulate counts as well as microbial counts within controlled environments vary with the sampling location and the activities being conducted during sampling. Monitoring the environment for nonviable particulates and microorganisms is an important control function because they both are important in achieving product compendial requirements for *Foreign and Particulate Matter* and *Sterility* in *Injections* ⟨1⟩.

Total particulate monitoring may provide a better means of evaluating the overall quality of the environment in isolators and closed RABS than in most conventional clean rooms. The superior exclusion of human-borne contamination provided by an isolator results in an increased proportion of nonviable particulates. Total particulate counting in an isolator is likely to provide an immediate indicator of changes in contamination level. Microbial monitoring programs should assess the effectiveness of cleaning and sanitization practices by and of personnel who could have an impact on the bioburden. Because isolators are typically decontaminated using an automatic vapor or gas generation system, microbial monitoring is much less important in establishing their efficiency in eliminating bioburden. These automatic decontamination systems are validated directly, using an appropriate biological indicator challenge, and are controlled to defined exposure parameters during routine use to ensure consistent decontamination.

Microbial monitoring cannot and need not identify and quantify all microbial contaminants in these controlled environments. Microbiological monitoring of a clean room is technically a semiquantitative exercise, because a truly quantitative evaluation of the environment is not possible, given the limitations in sampling equipment. Both the lack of precision of enumeration methods and the restricted sample volumes that can be effectively analyzed suggest that environmental monitoring is incapable of providing direct quantitative information about sterility assurance. Analysts should remember that no microbiological sampling plan can prove the absence of microbial contamination, even when no viable contamination is recovered. The absence of growth on a microbiological sample means only that growth was not discovered; it does not mean that the environment is free of contamination.

Routine microbial monitoring should provide sufficient information to demonstrate that the aseptic processing environment is operating in an adequate state of control. The real value of a microbiological monitoring program lies in its ability to confirm

Accessed from 167.78.4.19 by James Cumbie (ocean22) on Mon Sep 09 15:04:23 EDT 2013

consistent, high-quality environmental conditions at all times. Monitoring programs can detect changes in the contamination recovery rate that may be indicative of changes in the state of control within the environment.

Environmental microbial monitoring and analysis of data by qualified personnel can assist in ensuring that a suitable state of control is maintained. The environment should be sampled during normal operations to allow the collection of meaningful, process-related data. Microbial sampling should occur when materials are in the area, processing activities are ongoing, and a full complement of personnel is working within the aseptic processing environment.

Microbial monitoring of manufacturing clean rooms, RABS, and isolators should include compressed gases, surfaces, room or enclosure air, and any other materials and equipment that might produce a risk of contamination. The analysis of contamination trends in an aseptic environment has long been a component of the environmental control program. In aseptic processing environments and particularly in ISO Class 5 environments, contamination is infrequently observed. In isolator enclosures, contamination is rarer still because of superior exclusion of human-borne contamination. Because of the criticality of these environments, even minor changes in the contamination incident rates may be significant, and manufacturers should frequently and carefully review monitoring data. In less critical environments, microbial contamination may be higher, but changes in recovery rates should be noted, investigated, and corrected. Isolated recoveries of microorganisms should be considered a normal phenomenon in conventional clean rooms, and these incidents generally do not require specific corrective action, because it is almost certain that investigations will fail to yield a scientifically verifiable cause. Because sampling itself requires an aseptic intervention in conventional clean rooms, any single uncorrelated contamination event could be a false positive.

When contamination recovery rates increase from an established norm, process and operational investigation should take place. Investigations will differ depending on the type and processing of the product manufactured in the clean room, RABS, or isolator. Investigation should include a review of area maintenance documentation; sanitization/decontamination documentation; the occurrence of nonroutine events; the inherent physical or operational parameters, such as changes in environmental temperature and relative humidity; and the training status of personnel.

In closed RABS and isolator systems, the loss of glove integrity or the accidental introduction of material that has not been decontaminated are among the most probable causes of detectable microbial contamination. Following the investigation, actions should be taken to correct or eliminate the most probable causes of contamination. Because of the relative rarity of contamination events in modern facilities, the investigation often proves inconclusive. When corrective actions are undertaken, they may include reinforcement of personnel training to emphasize acceptable gowning and aseptic techniques and microbial control of the environment. Some additional microbiological sampling at an increased frequency may be implemented, but this may not be appropriate during aseptic processing because intrusive or overly intensive sampling may entail an increased contamination risk. When additional monitoring is desirable, it may be more appropriate during process simulation studies. Other measures that can be considered to better control microbial contamination include additional sanitization, use of different sanitizing agents, and identification of the microbial contaminant and its possible source.

In any aseptic environment, conventional or advanced, the investigation and the rationale for the course of action chosen as a result of the investigation must be carefully and comprehensively documented.

PHYSICAL EVALUATION OF CONTAMINATION CONTROL EFFECTIVENESS

Clean environments should be certified as described in ISO 14644 series in order to meet their design classification requirements. The design, construction, and operation of clean rooms vary greatly, so it is difficult to generalize requirements for parameters such as filter integrity, air velocity, air patterns, air changes, and pressure differential. In particularly critical applications such as aseptic processing, a structured approach to physical risk assessment may be appropriate.

One such method has been developed by Ljundqvist and Reinmüller. This method, known as the L-R method, challenges the air ventilation system by evaluating both airflow and the ability of an environment to dilute and remove airborne particles. In the L-R method, a smoke generator allows analysts to visualize the air movements throughout a clean room or a controlled environment, including vortices or turbulent zones, and the airflow pattern can be fine-tuned to minimize these undesirable effects. Following visual optimization of airflow, particulate matter is generated close to the critical zone and sterile field. This evaluation is done under simulated production conditions but with equipment and personnel in place. This type of test can also be used to evaluate the ability of RABS and isolator systems, particularly around product exit ports in these systems, to resist the effects of contamination.

Visual evaluation of air movement within clean rooms is a subjective process. Complete elimination of turbulence or vortices is not possible in operationing clean rooms that contain personnel and equipment. Air visualization is simply one step in the effort to optimize clean room operations and is not a definitive pass/fail test, because acceptable or unacceptable conditions are not readily definable.

Proper testing and optimization of the physical characteristics of the clean room, RABS, or isolator are essential before implementation of the microbiological monitoring program. Assurance that the clean room, RABS, or isolator is in compliance with its predetermined engineering specifications provides confidence that the ability of the facility systems and operating practices to control the bioburden and nonviable particulate matter are appropriate for the intended use. These tests should be repeated during routine certification of the clean room or advanced aseptic processing systems, and whenever significant changes are made to the operation, such as personnel flow, equipment operation, material flow, air-handling systems, or equipment layout.

TRAINING OF PERSONNEL

Good personnel performance plays an essential role in the control of contamination, proper training and supervision are central to contamination control. Aseptic processing is the most critical activity conducted in microbiological controlled environments, and manufacturers must pay close attention to details in all aspects of this endeavor. Rigorous discipline and strict supervision of personnel are essential in order to ensure a level of environmental quality appropriate for aseptic processing.

Copyright (c) 2013 The United States Pharmacopeial Convention. All rights reserved.

Training of all personnel working in controlled environments is critical. This training is equally important for personnel responsible for the microbial monitoring program, because contamination of the clean working area could inadvertently occur during microbial sampling. In highly automated operations, monitoring personnel may be the employees who have the most direct contact with the critical surfaces and zones within the processing area. Microbiological sampling has the potential to contribute to microbial contamination caused by inappropriate sampling techniques or by placing personnel in or near the critical zone. A formal training program is required to minimize this risk. This training should be documented for all personnel who enter controlled environments. Interventions should always be minimized, including those required for monitoring activities; but when interventions cannot be avoided, they must be conducted with aseptic technique that approaches perfection as closely as possible.

Management of the facility must ensure that personnel involved in operations in clean rooms and advanced aseptic processing environments are well versed in relevant microbiological principles. The training should include instruction about the basic principles of aseptic technique and should emphasize the relationship of manufacturing and handling procedures to potential sources of product contamination. Those supervising, auditing, or inspecting microbiological control and monitoring activities should be knowledgeable about the basic principles of microbiology, microbial physiology, disinfection and sanitation, media selection and preparation, taxonomy, and sterilization. The staff responsible for supervision and testing should have academic training in medical or environmental microbiology. Sampling personnel as well as individuals working in clean rooms should be knowledgeable about their responsibilities in minimizing the release of microbial contamination. Personnel involved in microbial identification require specialized training about required laboratory methods. Additional training about the management of collected data must be provided. Knowledge and understanding of applicable standard operating procedures are critical, especially those procedures relating to corrective measures taken when environmental conditions require. Understanding of contamination control principles and each individual's responsibilities with respect to good manufacturing practices (GMPs) should be an integral part of the training program, along with training in conducting investigations and in analyzing data.

The only significant sources of microbial contamination in aseptic environments are the personnel. Because operators disperse contamination and because the ultimate objective in aseptic processing is to reduce end-user risk, only healthy individuals should be permitted access to controlled environments. Individuals who are ill must not be allowed to enter an aseptic processing environment, even one that employs advanced aseptic technologies such as isolators, blow/fill/seal, or closed RABS.

The importance of good personal hygiene and a careful attention to detail in aseptic gowning cannot be overemphasized. Gowning requirements differ depending on the use of the controlled environment and the specifics of the gowning system itself. Aseptic processing environments require the use of sterilized gowns with the best available filtration properties. The fullest possible skin coverage is desirable, and sleeve covers or tape should be considered to minimize leaks at the critical glove–sleeve junction. Exposed skin should never be visible in conventional clean rooms under any conditions. The personnel and gowning considerations for RABS are essentially identical to those for conventional clean rooms.

Once employees are properly gowned, they must be careful to maintain the integrity of their gloves, masks, and other gown materials at all times. Operators who work with isolator systems are not required to wear sterilized clean-room gowns, but inadequate aseptic technique and employee-borne contamination are the principal hazards to safe aseptic operations in isolators, as well as RABS, and in conventional clean rooms. Glove-and-sleeve assemblies can develop leaks that can allow the mechanical transfer of microorganisms to the product. A second glove, worn either under or over the primary isolator/RABS glove, can provide an additional level of safety against glove leaks or can act as a hygienic measure. Also, operators must understand that aseptic technique is an absolute requirement for all manipulations performed with gloves within RABS and isolator systems.

The environmental monitoring program, by itself, cannot detect all events in aseptic processing that might compromise the microbiological quality of the environment. Therefore, periodic media-fill or process simulation studies are necessary, as is thorough ongoing supervision, to ensure that appropriate operating controls and training are effectively maintained.

CRITICAL FACTORS IN THE DESIGN AND IMPLEMENTATION OF A MICROBIOLOGICAL ENVIRONMENTAL MONITORING PROGRAM

Since the advent of comprehensive environmental monitoring programs, their applications in capturing adverse trends or drifts has been emphasized. In a modern aseptic processing environment—whether an isolator, RABS, or conventional clean room—contamination has become increasingly rare. Nevertheless, a monitoring program should be able to detect a change from the validated state of control in a facility and to provide information for implementing appropriate countermeasures. An environmental monitoring program should be tailored to specific facilities and conditions. It is also helpful to take a broad perspective in the interpretation of data. A single uncorrelated result on a given day may not be significant in the context of the technical limitations associated with aseptic sampling methods.

Selection of Growth Media

A general microbiological growth medium such as soybean–casein digest medium (SCDM) is suitable for environmental monitoring in most cases because it supports the growth of a wide range of bacteria, yeast, and molds. This medium can be supplemented with additives to overcome or to minimize the effects of sanitizing agents or of antibiotics. Manufacturers should consider the specific detection of yeasts and molds. If necessary, general mycological media such as Sabouraud's, modified Sabouraud's, or inhibitory mold agar can be used. In general, monitoring for strict anaerobes is not performed, because these organisms are unlikely to survive in ambient air. However, micro-aerophilic organisms may be observed in aseptic processing. Should anoxic conditions exist or if investigations warrant (e.g., identification of these organisms in sterility testing facilities or *Sterility Tests* ⟨71⟩ results), monitoring for micro-aerophiles and organisms that grow under low-oxygen conditions may be warranted. The ability of any media used in environmental monitoring, including those selected to recover specific types of organisms, must be evaluated for their ability to support growth, as indicated in ⟨71⟩.

Accessed from 167.78.4.19 by James Cumbie (ocean22) on Mon Sep 09 15:04:23 EDT 2013

Selection of Culture Conditions

Time and incubation temperatures are set once the appropriate media have been selected. Typically, for general microbiological growth media such as SCDM, incubation temperatures in the ranges of approximately 20°–35° have been used with an incubation time of not less than 72 hours. Longer incubation times may be considered when contaminants are known to be slow growing. The temperature ranges given above are by no means absolute. Mesophilic bacteria and mold common to the typical facility environment are generally capable of growing over a wide range of temperatures. For many mesophilic organisms, recovery is possible over a range of approximately 20°. In the absence of confirmatory evidence, microbiologists may incubate a single plate at both a low and a higher temperature. Incubating at the lower temperature first may compromise the recovery of Gram-positive cocci that are important because they are often associated with humans.

Sterilization processes for preparing growth media should be validated. When selective media are used for monitoring, incubation conditions should reflect published technical requirements. Contamination should not be introduced into a manufacturing clean room as a result of using contaminated sampling media or equipment. Of particular concern is the use of aseptically prepared sampling media. Wherever possible, sampling media and their wrappings should be terminally sterilized by moist heat, radiation, or other suitable means. If aseptically prepared media must be used, analysts must carry out preincubation and visual inspection of all sampling media before introduction into the clean room. The reader is referred to *Microbiological Best Laboratory Practices* ⟨1117⟩ for further information regarding microbiology laboratory operations and control.

ESTABLISHMENT OF SAMPLING PLAN AND SITES

During initial startup or commissioning of a clean room or other controlled environment, specific locations for air and surface sampling should be determined. Locations considered should include those in proximity of the exposed product, containers, closures, and product contact surfaces. In aseptic processing, the area in which containers, closures, and product are exposed to the environment is often called the *critical zone*—the critical zone is always ISO 5. For aseptic operations the entire critical zone should be treated as a sterile field. A nonsterile object, including the gloved hands of clean room personnel or an RABS/isolator glove, should never be brought into contact with a sterile product, container closure, filling station, or conveying equipment before or during aseptic processing operations. Operators and environmental monitoring personnel should never touch sterile parts of conveyors, filling needles, parts hoppers, or any other equipment that is in the product-delivery pathway. This means that surface monitoring on these surfaces is best done at the end of production operations.

The frequency of sampling depends on the manufacturing process conducted within an environment. Classified environments that are used only to provide a lower overall level of bioburden in nonsterile product manufacturing areas require relatively infrequent environmental monitoring. Classified environments in which closed manufacturing operations are conducted, including fermentation, sterile API processing, and chemical processes, require fewer monitoring sites and less frequent monitoring because the risk of microbial contamination from the surrounding environment is comparatively low. Microbiological monitoring of environments in which products are filled before terminal sterilization is generally less critical than the monitoring of aseptic processing areas. The amount of monitoring required in filling operations for terminal sterilization depends on the susceptibility of the product survival and the potential for proliferation of microbial contamination. The identification and estimated number of microorganisms that are resistant to the subsequent sterilization may be more critical than the microbiological monitoring of the surrounding manufacturing environments.

It is not possible to recommend microbial control levels for each type of manufacturing environment. The levels established for one ISO Class 7 environment, for example, may be inappropriate for another ISO Class 7 environment, depending on the production activities undertaken in each. The user should conduct a prospective risk analysis and develop a rationale for the sampling locations and frequencies for each controlled environment. The classification of a clean room helps establish control levels, but that does not imply that all rooms of the same classification should have the same control levels and the same frequency of monitoring. Monitoring should reflect the microbiological control requirements of manufacturing or processing activities. Formal risk assessment techniques can result in a scientifically valid contamination control program.

Table 2 suggests frequencies of sampling in decreasing order of frequency and in relation to the criticality or product risk of the area being sampled. This table distinguishes between aseptic processing where personnel are aseptically gowned and those where a lesser gowning is appropriate. Environmental monitoring sampling plans should be flexible with respect to monitoring frequencies, and sample plan locations should be adjusted on the basis of the observed rate of contamination and ongoing risk analysis. On the basis of long-term observations, manufacturers may increase or decrease sampling at a given location or eliminate a sampling location altogether. Oversampling can be as deleterious to contamination control as undersampling, and careful consideration of risk and reduction of contamination sources can guide the sampling intensity.

Copyright (c) 2013 The United States Pharmacopeial Convention. All rights reserved.

Table 2. Suggested Frequency of Sampling for Aseptic Processing Areas[a]

Sampling Area/Location	Frequency of Sampling
Clean Room/RABS	
Critical zone (ISO 5 or better)	
Active air sampling	Each operational shift
Surface monitoring	At the end of the operation
Aseptic area adjacent critical zone	
All sampling	Each operating shift
Other nonadjacent aseptic areas	
All sampling	Once per day
Isolators	
Critical zone (ISO 5 or better)	
Active air sampling	Once per day
Surface monitoring	At the end of the campaign
Nonaseptic areas surrounding the isolator	
All sampling	Once per month

[a] All operators are aseptically gowned in these environments (with the exception of background environments for isolators). These recommendations do not apply to production areas for nonsterile products or other classified environments in which fully aseptic gowns are not donned.

SELECTION OF SAMPLE SITES WITHIN CLEAN ROOMS AND ASEPTIC PROCESSING AREAS

ISO 14644 suggests a grid approach for the total particulate air classification of clean rooms. This approach is appropriate for certifying the total particulate air quality performance against its design objective. Grids may also have value in analyzing risk from microbial contamination, although in general, grids that have no personnel activity are likely to have low risk of contamination. Microbial contamination is strongly associated with personnel, so microbiological monitoring of unstaffed environments is of limited value.

Microbiological sampling sites are best selected with consideration of human activity during manufacturing operations. Careful observation and mapping of the clean room during the qualification phase can provide useful information concerning the movement and positioning of personnel. Such observation can also yield important information about the most frequently conducted manipulations and interventions.

The location and movement of personnel within the clean room correlate with contamination risk to the environment and to the processes conducted within that environment. Sample sites should be selected so that they evaluate the impact of personnel movement and work within the area, particularly interventions and manipulations within the critical zone.

The most likely route of contamination is airborne, so the samples most critical to risk assessment are those that relate to airborne contamination near exposed sterile materials. Other areas of concern are entry points where equipment and materials move from areas of lower classification to those of higher classification. Areas within and around doors and airlocks should be included in the monitoring scheme. It is customary to sample walls and floors, and indeed sampling at these locations can provide information about the effectiveness of the sanitization program. Sampling at these locations can take place relatively infrequently, because contamination there is unlikely to affect product. Operators should never touch floors and walls, so mechanical transmission of contamination from these surfaces to critical areas where product is exposed should not occur.

Manufacturers typically monitor surfaces within the critical zone, although this should be done only at the end of operations. Residues of media or diluent from wet swabs should be avoided on surfaces, because they could lead to microbial proliferation. Also, cleaning surfaces to remove diluent or media requires personnel intervention and movements that can result in release of microbial contamination into the critical zone and can disrupt airflow.

MICROBIOLOGICAL CONTROL PARAMETERS IN CLEAN ROOMS, ISOLATORS, AND RABS

Since the early 1980s, manufacturers have established alert and action levels for environmental monitoring. In recent years the numerical difference between alert and action levels has become quite small, especially in ISO 5 environments. Growth and recovery in microbiological assays have normal variability in the range of $\pm 0.5 \log_{10}$. Studies on active microbiological air samplers indicate that variability of as high as tenfold is possible among commonly used sampling devices. As a result of this inherent variability and indeterminate sampling error, the supposed differences between, for example, an alert level of 1 cfu and an action level of 3 cfu are not analytically significant. Treating differences that are within expected, and therefore, normal ranges as numerically different is not scientifically valid and can result in unwarranted activities. In a practical sense, numerical values that vary by as much as five- to tenfold may not be significantly different.

Because of the limited accuracy and precision of microbial growth and recovery assays, analysts can consider the frequency with which contamination is detected rather than absolute numbers of cfu detected in any single sample. Also, a cfu is not a direct enumeration of microorganisms present but rather is a measure of contamination that may have originated from a clump of organisms.

Mean contamination recovery rates should be determined for each clean room environment, and changes in contamination recovery rate at a given site or within a given room may indicate the need for corrective action. Within the ISO 5 critical zone,

Accessed from 167.78.4.19 by James Cumbie (ocean22) on Mon Sep 09 15:04:23 EDT 2013

airborne and surface contamination recovery rates of 1% or less should be attainable with current methods. Contamination recovery rates for closed RABS and isolator systems should be significantly lower still and can be expected to be <0.1%, on the basis of published monitoring results.

Contamination observed at multiple sites in an environment within a single sampling period may indicate increased risk to product and should be carefully evaluated. The appearance of contamination nearly simultaneously at multiple sites could also arise from poor sampling technique, so careful review is in order before drawing conclusions about potential loss of control. Resampling an environment several days after contamination is of little value, because the conditions during one sampling occasion may not be accurately duplicated during another.

Surface samples may also be taken from clean room garments. Personnel sampling should be emphasized during validation and is best done at the completion of production work in order to avoid adventitious contamination of the garments. In this case the average should be <1% for these sample sites as well. Gloves on closed RABS and isolators should meet the more rigorous expectation of <0.1% contamination recovery rates.

Because of the inherent variability of microbial sampling methods, contamination recovery rates are a more useful measure of trending results than is focusing on the number of colonies recovered from a given sample. *Table 3* provides recommended contamination recovery rates for aseptic processing environments. The incident rate is the rate at which environmental samples are found to contain microbial contamination. For example, an incident rate of 1% would mean that only 1% of the samples taken have any contamination regardless of colony number. In other words, 99% of the samples taken are completely free of contamination. Contamination recovery rates that are higher than those recommended in *Table 3* may be acceptable in rooms of similar classification that are used for lower-risk activities. Action should be required when the contamination recovery rate trends above these recommendations for a significant time.

Table 3. Suggested Initial Contamination Recovery Rates in Aseptic Environments[a]

Room Classification	Active Air Sample (%)	Settle Plate (9 cm) 4 h Exposure (%)	Contact Plate or Swab (%)	Glove or Garment (%)
Isolator/Closed RABS (ISO 5 or better)	<0.1	<0.1	<0.1	<0.1
ISO 5	<1	<1	<1	<1
ISO 6	<3	<3	<3	<3
ISO 7	<5	<5	<5	<5
ISO 8	<10	<10	<10	<10

[a] All operators are aseptically gowned in these environments (with the exception of background environments for isolators). These recommendations do not apply to production areas for nonsterile products or other classified environments in which fully aseptic gowns are not donned.

Detection frequency should be based on actual monitoring data and should be retabulated monthly. Action levels should be based on empirical process capability. If detection frequencies exceed the recommendations in *Table 3* or are greater than established process capability, then corrective actions should be taken. Corrective actions may include but are not limited to the following:

- Revision of the sanitization program, including selection of antimicrobial agents, application methods, and frequencies
- Increased surveillance of personnel practices, possibly including written critiques of aseptic methods and techniques
- Review of microbiological sampling methods and techniques

When higher-than-typical recovery levels for glove and garment contamination are observed, additional training for gowning practices may be indicated.

SIGNIFICANT EXCURSIONS

Excursions beyond approximately 15 cfu recovered from a single ISO 5 sample, whether from airborne, surface, or personnel sources, should happen very infrequently. When such ISO 5 excursions do occur, they may be indicative of a significant loss of control when they occur within the ISO 5 critical zone in close proximity to product and components. Thus, any ISO 5 excursion > 15 cfu should prompt a careful and thorough investigation.

A key consideration for an abnormally high number of recovered colonies is whether this incident is isolated or can be correlated with other recoveries. Microbiologists should review recovery rates for at least two weeks before the incident of abnormally high recovery so that they can be aware of other recoveries that might indicate an unusual pattern. Microbiologists should carefully consider all recoveries, including those that are in the more typical range of 1–5 cfu. The identity of the organisms recovered is an important factor in the conduct of this investigation.

In the case of an isolated single excursion, establishing a definitive cause probably will not be possible, and only general corrective measures can be considered. It is never wise to suggest a root cause for which there is no solid scientific evidence. Also, there should be an awareness of the variability of microbial analysis. Realistically, there is no scientific reason to treat a recovery of 25 cfu as statistically different from a recovery of 15 cfu. A value of 15 cfu should not be considered significant in terms of process control, because realistically there is no difference between a recovery of 14 cfu and one of 15 cfu. Microbiologists should use practical scientific judgment in their approach to excursions.

Copyright (c) 2013 The United States Pharmacopeial Convention. All rights reserved.

FURTHER CONSIDERATIONS ABOUT DATA INTERPRETATION

In the high-quality environments required for aseptic processing, detection frequency typically is low. As can be seen from the rates recommended in *Table 3*, the majority of samples taken in an aseptic processing area will yield a recovery of zero contamination. In the most critical areas within an aseptic processing operation, it is expected that less than 1% of the samples will yield any recoverable contamination. In the most advanced of modern aseptic operations that use separative technologies such as isolators or closed RABS, the recovery rate will approach zero at all times.

The microbiologist responsible for environmental control or sterility assurance should not take this to mean that the environmental quality approaches sterility. The sensitivity of any microbial sampling system in absolute terms is not known. In environmental monitoring, a result of zero means only that the result is below the limit of detection of the analytical system. A false sense of security should not be derived from the infrequency of contamination recovery in aseptic processing.

Sterility assurance is best accomplished by a focus on human-borne contamination and the facility design features that best mitigate risk from this contamination. Greatest risk mitigation can be attained by reducing or eliminating human interventions through proper equipment design and by providing sufficient air exchanges per hour for the intended personnel population of the facility. Other risk mitigation factors include effective personnel and material movement and the proper control of temperature and humidity. Secondary factors for risk mitigation include cleaning and sanitization. Risk analysis models that analyze processes prospectively to reduce human-borne contamination risk by minimizing operator interventions are more powerful tools for sterility assurance than monitoring. Environmental monitoring cannot prove or disprove in absolute terms the sterility of a lot of product. Environmental monitoring can only assure those responsible for a process that a production system is in a consistent, validated state of control. Care should be taken to avoid drawing inappropriate conclusions from monitoring results.

SAMPLING AIRBORNE MICROORGANISMS

Among the most commonly used tools for monitoring aseptic environments are impaction and centrifugal samplers. A number of commercially available samplers are listed for informational purposes. The selection, appropriateness, and adequacy of using any particular sampler are the responsibility of the user.

Slit-to-Agar Air Sampler (STA)**:** The unit is powered by an attached source of controllable vacuum. The air intake is obtained through a standardized slit below which is placed a slowly revolving Petri dish that contains a nutrient agar. Airborne particles that have sufficient mass impact the agar surface, and viable organisms are allowed to grow. A remote air intake is often used to minimize disturbance of unidirectional airflow.

Sieve Impactor: This apparatus consists of a container designed to accommodate a Petri dish that contains a nutrient agar. The cover of the unit is perforated with openings of a predetermined size. A vacuum pump draws a known volume of air through the cover, and airborne particles that contain microorganisms impact the agar medium in the Petri dish. Some samplers feature a cascaded series of sieves that contain perforations of decreasing size. These units allow determination of the size range distribution of particulates that contain viable microorganisms based on the size of the perforations through which the particles landed on the agar plates.

Centrifugal Sampler: The unit consists of a propeller or turbine that pulls a known volume of air into the unit and then propels the air outward to impact on a tangentially placed nutrient agar strip set on a flexible plastic base.

Sterilizable Microbiological Atrium: The unit is a variant of the single-stage sieve impactor. The unit's cover contains uniformly spaced orifices approximately 0.25 inch in size. The base of the unit accommodates one Petri dish containing a nutrient agar. A vacuum pump controls the movement of air through the unit, and a multiple-unit control center as well as a remote sampling probe are available.

Surface Air System Sampler: This integrated unit consists of an entry section that accommodates an agar contact plate. Immediately behind the contact plate is a motor and turbine that pulls air through the unit's perforated cover over the agar contact plate and beyond the motor, where it is exhausted. Multiple mounted assemblies are also available.

Gelatin Filter Sampler: The unit consists of a vacuum pump with an extension hose terminating in a filter holder that can be located remotely in the critical space. The filter consists of random fibers of gelatin capable of retaining airborne microorganisms. After a specified exposure time, the filter is aseptically removed and dissolved in an appropriate diluent and then plated on an appropriate agar medium to estimate its microbial content.

Settling Plates: This method is still widely used as a simple and inexpensive way to qualitatively assess the environments over prolonged exposure times. Published data indicate that settling plates, when exposed for 4- to 5-hour periods, can provide a limit of detection for a suitable evaluation of the aseptic environment. Settling plates may be particularly useful in critical areas where active sampling could be intrusive and a hazard to the aseptic operation.

One of the major drawbacks of mechanical air samplers is the limited sample size of air being tested. When the microbial level in the air of a controlled environment is expected to contain extremely low levels of contamination per unit volume, at least 1 cubic meter of air should be tested in order to maximize sensitivity. Typically, slit-to-agar devices have an 80-L/min sampling capacity (the capacity of the surface air system is somewhat higher). If 1 cubic meter of air were tested, then it would require an exposure time of 15 min. It may be necessary to use sampling times in excess of 15 min to obtain a representative environmental sample. Although some samplers are reported to have high sampling volumes, consideration should be given to the potential for disruption of the airflow patterns in any critical area and to the creation of turbulence.

Technicians may wish to use remote sampling systems in order to minimize potential risks resulting from intervention by environmental samplers in critical zones. Regardless of the type of sampler used, analysts must determine that the extra tubing needed for a remote probe does not reduce the method's sensitivity to such an extent that detection of low levels of contamination becomes unlikely or even impossible.

Accessed from 167.78.4.19 by James Cumbie (ocean22) on Mon Sep 09 15:04:23 EDT 2013

SURFACE SAMPLING

Another component of the microbial-control program in controlled environments is surface sampling of equipment, facilities, and personnel. The standardization of surface sampling methods and procedures has not been as widely addressed in the pharmaceutical industry as has the standardization of air-sampling procedures. Surface sampling can be accomplished by the use of contact plates or by the swabbing method.

Contact plates filled with nutrient agar are used for sampling regular or flat surfaces and are directly incubated for the appropriate time and temperature for recovery of viable organisms. Specialized agar can be used for the recovery of organisms that have specific growth requirements. Microbial estimates are reported per contact plate.

The swabbing method can be used to supplement contact plates for sampling of irregular surfaces, especially irregular surfaces of equipment. The area that will be swabbed is defined with a sterile template of appropriate size. In general, it is in the range of 24–30 cm^2. After sample collection the swab is placed in an appropriate diluent or transport medium and is plated onto the desired nutrient agar. The microbial estimates are reported per swab of defined sampling area.

Surface monitoring is used as an environmental assessment tool in all types of classified environments. In ISO 5 environments for aseptic processing, surface monitoring is generally performed beside critical areas and surfaces. Component hoppers and feed chutes that contact sterile surfaces on closures and filling needles can be tested for microbial contamination. Often in conventional staffed clean rooms, these product contact surfaces are steam sterilized and aseptically assembled. The ability of operators to perform these aseptic manipulations are evaluated during process stimulations or media fills, although true validation of operator technique in this manner is not possible. Surface monitoring on surfaces that directly contact sterile parts or product should be done only after production operations are completed. Surface sampling is not a sterility test and should not be a criterion for the release or rejection of product. Because these samples must be taken aseptically by personnel, it is difficult to establish with certainty that any contamination recovered is product related.

CULTURE MEDIA AND DILUENTS

The type of medium, liquid or solid, used for sampling or plating microorganisms depends on the procedure and equipment used. Any medium used should be evaluated for suitability for the intended purpose. The most commonly used all-purpose solid microbiological growth medium is soybean–casein digest agar. As previously noted, this medium can be supplemented with chemicals that counteract the effect of various antimicrobials.

IDENTIFICATION OF MICROBIAL ISOLATES

A successful environmental control program includes an appropriate level of identification of the flora obtained by sampling. A knowledge of the flora in controlled environments aids in determining the usual microbial flora anticipated for the facility and in evaluating the effectiveness of the cleaning and sanitization procedures, methods, agents, and recovery methods. The information gathered by an identification program can be useful in the investigation of the source of contamination, especially when recommended detection frequencies are exceeded.

Identification of isolates from critical and immediately adjacent areas should take precedence over identification of microorganisms from noncritical areas. Identification methods should be verified, and ready-to-use kits should be qualified for their intended purpose.

CONCLUSION

Environmental monitoring is one of several key elements required in order to ensure that an aseptic processing area is maintained in an adequate level of control. Monitoring is a qualitative exercise, and even in the most critical applications such as aseptic processing, conclusions regarding lot acceptability should not be made on the basis of environmental sampling results alone. Environments that are essentially free of human operators generally have low initial contamination rates and maintain low levels of microbial contamination. Human-scale clean rooms present a very different picture. Studies conclusively show that operators, even when carefully and correctly gowned, continuously slough microorganisms into the environment. Therefore, it is unreasonable to assume that samples producing no colonies, even in the critical zone or on critical surfaces, will always be observed. Periodic excursions are a fact of life in human-scale clean rooms, but the contamination recovery rate, particularly in ISO 5 environments used for aseptic processing, should be consistently low.

Clean-room operators, particularly those engaged in aseptic processing, must strive to maintain suitable environmental quality and must work toward continuous improvement of personnel operations and environmental control. In general, fewer personnel involved in aseptic processing and monitoring, along with reduction in interventions, reduces risk from microbial contamination.

APPENDIX

Airborne Particulate Count (also referred to as *Total Particulate Count*): The total number of particles of a given size per unit volume of air.

Airborne Viable Particulate Count (also referred to as *Total Airborne Aerobic Microbial Count*): The recovered number of colony-forming units (cfu) per unit volume of air.

Air Changes: The frequency per unit of time (minutes, hours, etc.) that the air within a controlled environment is replaced. The air can be recirculated partially or totally replaced.

Copyright (c) 2013 The United States Pharmacopeial Convention. All rights reserved.

Air Sampler: Devices or equipment used to sample a measured amount of air in a specified time to quantitate the particulate or microbiological status of air in the controlled environment.
Aseptic: Technically, the absence of microorganisms, but in aseptic processing this refers to methods and operations that minimize microbial contamination in environments where sterilized product and components are filled and/or assembled.
Aseptic Processing: An operation in which the product is assembled or filled into its primary package in an ISO 5 or better environment and under conditions that minimize the risk of microbial contamination. The ultimate goal is to produce products that are as free as possible of microbial contamination.
Barrier System: Physical barriers installed within an aseptic processing room to provide partial separation between aseptically gowned personnel and critical areas subject to considerable contamination risk. Personnel access to the critical zone is largely unrestricted. It is subject to a high level disinfection.
Bioburden: Total number and identity of the predominant microorganisms detected in or on an article.
Clean Room: A room in which the concentration of airborne particles is controlled to meet a specified airborne particulate cleanliness Class. In addition, the concentration of microorganisms in the environment is monitored; each cleanliness Class defined is also assigned a microbial level for air, surface, and personnel gear.
Commissioning of a Controlled Environment: Certification by engineering and quality control that the environment has been built according to the specifications of the desired cleanliness Class and that, under conditions likely to be encountered under normal operating conditions (or worst-case conditions), it is capable of delivering an aseptic process. Commissioning includes media-fill runs and results of the environmental monitoring program.
Contamination Recovery Rate: The contamination recovery rate is the rate at which environmental samples are found to contain any level of contamination. For example, an incident rate of 1% would mean that only 1% of the samples taken have any contamination regardless of colony number.
Controlled Environment: Any area in an aseptic process system for which airborne particulate and microorganism levels are controlled to specific levels, appropriate to the activities conducted within that environment.
Corrective Action: Actions to be performed that are according to standard operating procedures and that are triggered when certain conditions are exceeded.
Critical Zone: Typically the entire area where product and the containers and closures are exposed in aseptic processing.
Detection Frequency: The frequency with which contamination is observed in an environment. Typically expressed as a percentage of samples in which contamination is observed per unit of time.
Environmental Isolates: Microorganisms that have been isolated from the environmental monitoring program.
Environmental Monitoring Program: Documented program implemented via standard operating procedures that describes in detail the methods and acceptance criteria for monitoring particulates and microorganisms in controlled environments (air, surface, personnel gear). The program includes sampling sites, frequency of sampling, and investigative and corrective actions.
Equipment Layout: Graphical representation of an aseptic processing system that denotes the relationship between and among equipment and personnel. This layout is used in the *Risk Assessment Analysis* to determine sampling site and frequency of sampling based on potential for microbiological contamination of the product/container/closure system. Changes must be assessed by responsible managers, since unauthorized changes in the layout for equipment or personnel stations could result in increase in the potential for contamination of the product/container/closure system.
Isolator for Aseptic Processing: An aseptic isolator is an enclosure that is over-pressurized with HEPA filtered air and is decontaminated using an automated system. When operated as a closed system, it uses only decontaminated interfaces or rapid transfer ports (RTPs) for materials transfer. After decontamination they can be operated in an open manner with the ingress and/or egress of materials through defined openings that have been designed and validated to preclude the transfer of contamination. It can be used for aseptic processing activities or for asepsis and containment simultaneously.
Material Flow: The flow of material and personnel entering controlled environments should follow a specified and documented pathway that has been chosen to reduce or minimize the potential for microbial contamination of the product/closure/container systems. Deviation from the prescribed flow could result in increase in the potential for microbial contamination. Material/personnel flow can be changed, but the consequences of the changes from a microbiological point of view should be assessed by responsible managers and must be authorized and documented.
Media Fill: Microbiological simulation of an aseptic process by the use of growth media processed in a manner similar to the processing of the product and with the same container/closure system being used.
Media Growth Promotion: Procedure that references *Growth Promotion Test of Aerobes, Anerobes, and Fungi* in *Sterility Tests* ⟨71⟩ to demonstrate that media used in the microbiological environmental monitoring program, or in *media-fill* runs, are capable of supporting growth of indicator microorganisms and of environmental isolates from samples obtained through the monitoring program or their corresponding ATCC strains.
Product Contact Areas: Areas and surfaces in a controlled environment that are in direct contact with either products, containers, or closures and the microbiological status of which can result in potential microbial contamination of the product/container/closure system.
Restricted Access Barrier System (RABS): An enclosure that relies on HEPA filtered air over-spill to maintain separation between aseptically gowned personnel and the operating environment. It is subject to a high level of disinfection prior to use in aseptic process. It uses decontaminated (where necessary) interfaces or RTPs for materials transfer. It allows for the ingress and/or egress of materials through defined openings that have been designed and validated to preclude the transfer of contamination. If opened subsequent to decontamination, its performance capability is adversely impacted.
Risk Assessment Analysis: Analysis of the identification of contamination potentials in controlled environments that establish priorities in terms of severity and frequency and that will develop methods and procedures that will eliminate, reduce, minimize, or mitigate their potential for microbial contamination of the product/container/closure system.
Sampling Plan: A documented plan that describes the procedures and methods for sampling a controlled environment; identifies the sampling sites, the sampling frequency, and number of samples; and describes the method of analysis and how to interpret the results.

Accessed from 167.78.4.19 by James Cumbie (ocean22) on Mon Sep 09 15:04:23 EDT 2013

Sampling Sites: Documented geographical location, within a controlled environment, where sampling for microbiological evaluation is taken. In general, sampling sites are selected because of their potential for product/container–closure contacts.

Standard Operating Procedures: Written procedures describing operations, testing, sampling, interpretation of results, and corrective actions that relate to the operations that are taking place in a controlled environment and auxiliary environments. Deviations from standard operating procedures should be noted and approved by responsible managers.

Sterile or Aseptic Field: In aseptic processing or in other controlled environments, it is the space at the level of or above open product containers, closures, or product itself, where the potential for microbial contamination is highest.

Sterility: Within the strictest definition of sterility, an article is deemed sterile when there is complete absence of viable microorganisms. *Viable*, for organisms, is defined as having the capacity to reproduce. Absolute sterility cannot be practically demonstrated because it is technically unfeasible to prove a negative absolute. Also, absolute sterility cannot be practically demonstrated without testing every article in a batch. Sterility is defined in probabilistic terms, where the likelihood of a contaminated article is acceptably remote.

Swabs for Microbiological Sampling: Devices used to remove microorganisms from irregular or regular surfaces for cultivation to identify the microbial population of the surface. A swab is generally composed of a stick with an absorbent tip that is moistened before sampling and is rubbed across a specified area of the sample surface. The swab is then rinsed in a sterile solution to suspend the microorganisms, and the solution is transferred to growth medium for cultivation of the microbial population.

Trend Analysis: Data from a routine microbial environmental monitoring program that can be related to time, shift, facility, etc. This information is periodically evaluated to establish the status or pattern of that program to ascertain whether it is under adequate control. A trend analysis is used to facilitate decision-making for requalification of a controlled environment or for maintenance and sanitization schedules.

REFERENCES

Agalloco J, Akers J. Risk analysis for aseptic processing: The Akers-Agalloco method. *Pharm Technol.* 2005; 29(11):74–88.

Agalloco J, Akers J. The simplified Akers-Agalloco method for aseptic processing risk analysis. *Pharm Technol.* 2006; 31(7)60–72.

Akers, J. The proper role of environmental monitoring in aseptic processing. *Am Pharm Rev.* 2006; 9(4):24–28.

CDC, Healthcare Infection Control Advisory Committee. Guidelines for environmental control in healthcare facilities. *MMWR* 2003; 52(No. RR-10):1–42.

Favero MS, Puleo JR, Marshall JH, Oxborrow GS. Microbiological sampling of surfaces. *J Appl Bacteriol.* 1968; 31:336–346.

Hussong D, Madsen R. Analysis of environmental microbiology data from clean room samples. *Pharm Technol.* 2004; Aseptic Processing Suppl:10–15.

International Organization for Standardization (ISO). 14644-1, Clean rooms and associated environments, part 1: classification of air cleanliness. Geneva: ISO; 1999.

International Organization for Standardization (ISO). 14644-2, Clean rooms and associated environments, part 2: specifications for testing and monitoring to prove continued compliance with 14644 part 1. Geneva: ISO; 2000.

Jensen PA, Todd WF, Davis GN, Scarpino PV. Evaluation of eight bioaerosol samplers challenged with aerosol of free bacteria. *Am Ind Hyg Assoc J.* 1992; 53:660–667.

Ljungqvist B. Active sampling of airborne viable particulate in controlled environments: a comparative study of common instruments. *Eur J Parenter Sci.* 1998; 3:59–62.

Ljungqvist B, Reinmüller B. Interaction between air movements and the dispersion of contaminants: clean zones with unidirectional air flow. *J Parenter Sci Technol.* 1993; 47(2):60–69.

Ljungqvist B, Reinmüller B. Airborne viable particles and total number of airborne particles: comparative studies of active air sampling. *PDA J Sci Technol.* 2000; 54:112–116.

Maruyama M, Matsuoka T, Deguchi M, Akers J. The application of robotics to aseptic surface monitoring. *Pharm Technol*. 2007; 32(7):40–44.

Process simulation testing for sterile bulk pharmaceutical chemicals. PDA Technical Report No. 28. *J Parenter Sci Technol.* 1998; 52 S3.

Reinmüller B. Dispersion and risk assessment of airborne contaminants in pharmaceutical cleanrooms. *Building Serv Eng Bull* (Sweden). 2001; Bulletin No. 56.

Stewart SL, Grinshpun SA, Willeke K, Terzieva S, Ulevicius V, Donnelly J. Effect of impact stress on microbial recovery on an agar surface. *Appl Environ Micro.* 1995; 61:1232–1239.

Whyte W. Reduction of microbial dispersion by clothing. *J Parenter Sci Technol.* 1985; 39(1):51–60.

Copyright (c) 2013 The United States Pharmacopeial Convention. All rights reserved.

Change to read:

⟨1136⟩ • PACKAGING AND REPACKAGING—SINGLE-UNIT CONTAINERS

SCOPE

This chapter provides guidance for the packaging and repackaging of single-unit containers, and for the use and application of unit-of-use packaging. Although the chapter is intended for use by drug manufacturers, repackagers, and pharmacists, the information in the chapter may also be useful for suppliers of packages and packaging components. For the definition of specific types of packaging, see *Packaging and Storage Requirements* ⟨659⟩.

SINGLE-UNIT CONTAINER

Single-unit containers that package a prescription drug to be dispensed directly to the patient are required to be child-resistant. Single-unit packaging intended for institutional or hospital use may or may not be required to be child-resistant. Single-unit containers that are child-resistant include supported blisters, such as separate, peel, push, and tear notch, and enclosed or in-card blisters, such as pull tabs and slide packs.

PACKAGING MATERIALS

Materials used to manufacture single-unit packaging containers include glass and plastic. Glass used as a primary packaging component should meet the requirements of *Containers—Glass* ⟨660⟩. Plastic materials as a primary packaging component should meet the requirements of *Containers—Plastics* ⟨661⟩. The test for moisture permeability may be carried out as described in general test chapter *Containers—Performance Testing* ⟨671⟩.

PACKAGING CLOSURE TYPES

Reclosables and nonreclosables may be used for solid, semisolid, and liquid dosage forms. Both must be packaged in compliance with the 16 CFR 1700.15 standards. The Poison Prevention Packaging Act (PPPA) of 1970 requires in certain cases the use of special packaging—child-resistant and senior-friendly. Child-resistant packaging protects children from serious injury or illness resulting from ingesting or handling hazardous products including drugs.

Because drugs packaged in unit-of-use packaging are intended to be dispensed to the consumer without repackaging by the pharmacist, the manufacturer or repackager is responsible for the special packaging of PPPA-regulated substances in unit-of-use containers (16 CFR 1701.1).

Reclosables

Reclosables are containers with suitable closures that may incorporate tamper evidence and child-resistance capabilities. Reclosables may be used for glass or plastic containers.

Nonreclosables

Nonreclosables are containers with closures that are nonreclosable, such as blisters, sachets, strips, and other single-unit containers. Nonreclosables may include packs such as cold-formed foil blisters, foil strip packs, and PVC/Aclar® combining multilayer materials that are thermo-formed or cold-formed foil blisters. Nonreclosables may be child resistant depending on the intended use and place of use. Household nonreclosables are subject to the PPPA as defined in 16 CFR 1700.14. However, because of some unit-dose designs, not all unit-dose packages comply with the PPPA.

UNIT-OF-USE

Unit-of-use packaging, when provided by the manufacturer, offers some of the following attractive advantages. (1) A dosage form can be dispensed to a patient in the manufacturer's original container, a practice that recognizes that the suitability of the container has been established on the basis of the manufacturer's stability studies. (2) The counting and repackaging of dosage units in the pharmacy is eliminated, thereby reducing the possibility of human error. (3) The pharmacist is able to affix the label for the patient onto the unit-of-use package and is free to use the manufacturer's expiration date as the beyond-use date. (4) The number of dosage units in a single unit-of-use package may be determined on a case-by-case basis. (5) Patient compliance is improved. (6) The unit-of use package can protect against counterfeiting because traceability of product is ensured through bar coding techniques and National Drug Code (NDC) numbers.

Accessed from 167.78.4.19 by James Cumbie (ocean22) on Mon Sep 09 15:04:23 EDT 2013

Unit-of-use packaging, when provided by repackagers, offers the same attractive advantages as those offered by the manufacturer. However, unit-of-use repackagers should conform to all requirements as presented in *Good Repackaging Practices* ⟨1178⟩. There are a number of reasons why repackagers produce unit-of-use packaging, for example, (1) requests from institutions, (2) better inventory control, (3) reduced dispensing times, and (4) variations in some drug therapies.

The packaging of a unit-of-use system may be a multiple-unit or single-unit container. A unit-of-use system may contain a drug product in a liquid, semisolid, or solid dosage form (see also *FDA Guidance for Industry, Container Closure Systems for Packaging Human Drugs and Biologics*). [NOTE—The terms "unit-of-use package" and "unit-of-use container" may be used interchangeably.]

Unit-of-Use Labeling

The unit-of-use containers are labeled to include expiration dates, the manufacturer's lot number, the NDC designation, and bar codes as provided in the *Labeling* section of *General Notices and Requirements, Preservation, Packaging, Storage, and Labeling* and in *Good Repackaging Practices* ⟨1178⟩. Some of the advantages of having bar codes on the label include reduced medication errors, improved inventory control, and improved access to medication identity. The labeling covers information placed in the container by the manufacturer (see *General Notices and Requirements*). Acceptable labeling can range from full labeling, such as that for multiple-unit containers, to abbreviated labeling when the container is too small to include all of the text. Full labeling may also be provided on the carton if it is not present on the immediate container.

Unit-of-Use—Repackaging and Reprocessing

Unit-of-use containers are reprocessed or repackaged as instructed by the manufacturer. A unit-of-use package that is a blister package may not be reprocessed by a pharmacist once it has been deblistered from a unit-dose container (see *General Notices and Requirements* for application of the appropriate beyond-use date for a multiple-unit or unit-dose container). Deblistering is the process of removing medication from a blister-type container. However, under current Good Manufacturing Practices (cGMPs) and tight quality controls, the manufacturer or contract repackager may repackage and reprocess unit-of-use containers.

Information from Manufacturers

The manufacturer should provide appropriate stability information that can be used to determine appropriate labeling, storage, and shipping statements that will properly inform patients and practitioners. The manufacturer may make other assurances based on product information on packaging and distribution arrangements. In the event that a product is not to be repackaged, the manufacturer may so state in the labeling. The manufacturer also includes labeling and information necessary for optimal handling by the practitioner and the patient. The labeling and information should be bar coded to eliminate medication error and promote medication traceability.

Responsibility of the Dispenser—Labeling

The labeling on a unit-of-use container also includes a label added at the dispensing stage by the pharmacist. Prior to dispensing the unit-of-use package, the dispenser shall add label(s) that provide the following information:

1. The name of the patient;
2. The name and strength of the drug product, the directions for use as prescribed by a doctor or health-care provider, and the name of the prescriber; and
3. Any storage instruction, beyond-use date, and other information as deemed appropriate by federal and state laws.

In the pharmacy setting, pharmacists are encouraged to use bar codes, in conjunction with computerized prescription orders, to confirm that the right drug is being dispensed to the right patient. Bar coding would minimize errors and create an opportunity for medication traceability and accountability.

Quality Control of Packaging System

The packaging system shall meet the general considerations for system suitability, protection, safety, and performance characteristics as described in *FDA Guidance for Industry, Container Closure Systems for Packaging Human Drugs and Biologics*, and in *Containers—Glass* ⟨660⟩, *Containers—Plastics* ⟨661⟩, and *Containers—Performance Testing* ⟨671⟩.

REPACKAGING A SINGLE SOLID ORAL DRUG PRODUCT INTO A UNIT-DOSE CONTAINER

Repackaging of solid oral drug products, such as tablets and capsules, into unit-dose configurations is common practice both for the pharmacy that is dispensing drugs pursuant to a prescription and for the pharmaceutical repackaging firm. The following section contains minimum standards to be used as a guideline for repackaging practices.

Repackaging preparations into unit-dose configurations is an important aspect of pharmaceutical care and of optimization of patient compliance. For purposes of this chapter, there are two types of repackaging: the first involves pharmacies that dispense prescription drugs, and the second concerns commercial pharmaceutical repackaging firms.

Copyright (c) 2013 The United States Pharmacopeial Convention. All rights reserved.

Nomenclature and Definitions

Dispenser: A dispenser is a licensed or registered practitioner who is legally responsible for providing the patient with a preparation that is in compliance with a prescription or a medication order and contains a specific patient label. In addition, dispensers may prepare limited quantities in anticipation of a prescription or medication order from a physician. Dispensers are governed by the board of pharmacy of the individual state.

Package: The term "package" is synonymous with the term "container". See *Packaging and Storage Requirements* ⟨659⟩.

Pharmacy: A pharmacy is an establishment that is legally responsible for providing the patient with a drug preparation with a specific patient label, in compliance with a prescription or a medication order. The terms "dispenser" and "pharmacy" are used interchangeably.

Repackaging: Repackaging is the act of removing a preparation from its original primary container and placing it into another primary container, usually of smaller size.

Repackager: A repackager is an establishment that repackages drugs and sends them to a second location in anticipation of a need. Repackaging firms repackage preparations for distribution (e.g., for resale to distributors, hospitals, or other pharmacies), a function that is beyond the regular practice of a pharmacy. Distribution is not patient specific in that there are no prescriptions. Unlike dispensers, repackaging firms are required to register with the FDA and to comply with the Current Good Manufacturing Practice regulations in 21 CFR 210 and 211.

Materials

Blister packages offer a wide array of designs both in functionality and in appearance. Various packaging materials are used to create blisters that are tailored to provide optimum performance. The blister container consists of two components: the blister, which is the formed cavity that holds the product, and the lid stock, which is the material that seals to the blister, as shown below.

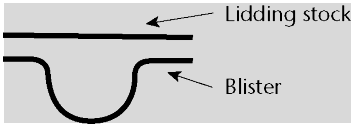

Schematic Presentation of a Typical Blister Pack

Because of the variety of blister films available, film selection should be based upon the degree of protection required. The choice of lid stock depends on how the blister is to be used, but generally the lid stock is made of aluminum foil. The material used to form the cavity is typically a plastic, which can be designed to protect the dosage form from moisture. There are widely varying degrees of moisture protection now available. For purposes of this general chapter, they are referred to as nominal, medium, high, and extreme moisture barrier properties.

Polyvinyl chloride: The most commonly used blister material is polyvinyl chloride (PVC). This material, which provides a nominal or zero barrier to moisture, is used when the product does not require effective moisture protection. PVC is available in a range of gauges and can be made opaque or can be tinted with pigments to block out specific light wavelengths.

The thickness of the PVC used is determined by the depth and size of the cavity to be formed. Because the plastic thins during the blister-forming process, care should be taken to ensure that the finished blister provides sufficient protection from light (if required) and that it is strong enough to adequately protect the dosage form. Common gauges of PVC used in the pharmaceutical industry range from 7.5 to 15 mil (0.0075 to 0.015 inch).

Barrier films: Many drug preparations are extremely sensitive to moisture and therefore require high barrier films. Several materials may be used to provide moisture protection. Barrier films commonly used in the pharmaceutical industry are described below.

PVC/PCTFE laminations—Polychlorotrifluoroethylene (PCTFE) film[1] is a thermoplastic film made from polychlorotrifluoroethylene fluoropolymer. The PCTFE film is laminated to the PVC by an adhesive layer between the PVC and the PCTFE film (duplex structure),

Duplex Structure

[1] PCTFE film is available from Allied Signal (as Aclar®) and from other sources.

Accessed from 167.78.4.19 by James Cumbie (ocean22) on Mon Sep 09 15:04:23 EDT 2013

or by a layer of polyethylene (PE) between the PVC–adhesive and the PCTFE–adhesive layers (triplex structure).

Triplex Structure

By using various gauges of PCTFE film, medium to extreme moisture barriers can be obtained.

PVC/PVdC laminations—PVC/PVdC is a film in which the PVC is coated with an emulsion of polyvinylidene chloride (PVdC), as shown in the duplex structure pictured below.

Duplex Structure

The PVdC layer is specified in g/m² and can be constructed to provide medium to high barrier protection. The coating weights commonly used in the pharmaceutical industry are 40, 60, and 90 g/m², and the film is offered with or without a middle layer of polyethylene (PE), as shown in the triplex structure below. The polyethylene is used with heavier coating weights, such as 60 and 90 g/m², to improve the thermoforming characteristics of the blister cavity.

Triplex Structure

Polypropylene—Because of its morphology, polypropylene (PP) serves as a good moisture barrier, its spherulitic structure creating an arduous path for water molecules to traverse. Although not commonly used as a pharmaceutical blister film in the United States, PP provides an economical alternative to medium barrier materials and is used in Europe as an alternative to PVC.

Cold form foil—This material is used for products that are extremely hygroscopic or light sensitive. It is an extreme moisture barrier and consists of three layers: PVC, aluminum foil, and nylon.

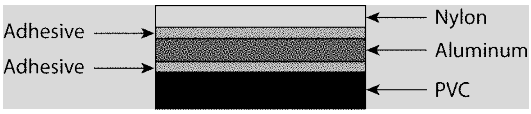

Cold Form Foil

Lid stock: The lid stock is sealed to the molded blister as described above. Different designs of lid stocks are available, and selection of a particular design depends on how the package will be used. Standard designs—peelable, child-resistant peelable, and push-through—are described below. The primary component of lid stock is typically aluminum, and its gauge varies from 18–25 µm (0.0078–0.001 inch). The side of the aluminum foil laminate in contact with the product provides the heat-sealable layer that forms the seal to the blister material. The heat-seal coating should be capable of forming an adequate seal with the blister film to which it is intended to seal. The materials used in the makeup of the heat-seal layer meet the requirements of 21 CFR 175 and 177.

Peelable—Peelable foil, commonly used in an institutional setting, consists of several layers, as shown below, and can be peeled away from the blister. [NOTE—For child-resistant peelable foil, a layer of polyester with the appropriate adhesives would be added.] With the peelable-foil lid stock, which is used in conjunction with blister tooling, a three-step process is required to open the blister.

Peelable Foil Construction

Copyright (c) 2013 The United States Pharmacopeial Convention. All rights reserved.

First, the blister cavity must be separated from the rest of the blister card. Next, the paper and polyester layers are pulled back from an unsealed area. Finally, the product is pushed through the remaining aluminum foil. It is important to note that use of this type of foil structure helps make the package more child resistant. However, if child-resistant packaging is required, the package design should be tested in accordance with the protocol described in 16 CFR 1700, the Poison Prevention Packaging Act.

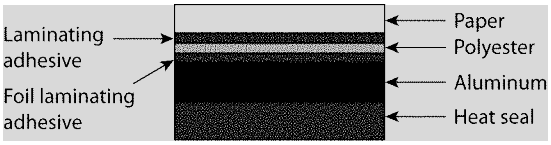

Child-Resistant Foil

Push-through—There are two commonly used types of push-through foil: one with a paper outer layer separated from the aluminum by a layer of adhesive, and one without paper. The paper outer layer serves as an aesthetic and makes it possible to print on the back of the blister.

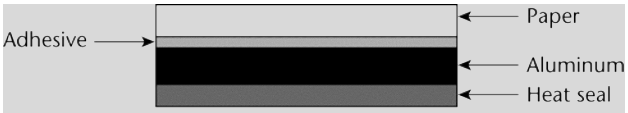

Push-through foil (with paper)

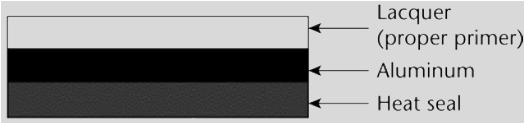

Push-through foil (no paper)

Other package styles: Other types of packages used for unit-dose packaging of solid dosage forms are strip packs, pouches, and sachets.

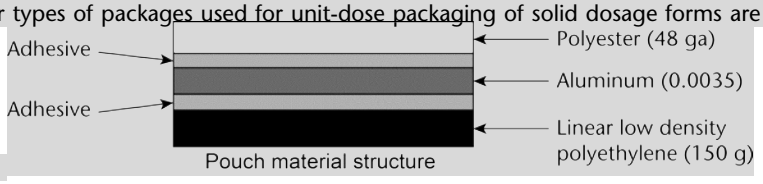

Pouch material structure

PROCESS

Unit-dose packages can be formed and sealed in a variety of ways. Larger scale repackagers may use thermoformers that accomplish these functions in-line, while smaller repackagers may purchase preformed blister material. This section begins with an overview of the process involved in thermoforming a blister, the fundamental process that also applies to other unit-dose package types such as pouches. The overview is not intended to be all-encompassing, but it highlights the major operations along with their critical parameters.

Thermoforming a blister unit-dose package: The complete thermoforming process consists of four basic stations where the following operations occur: forming, filling, sealing, and finishing. Thermoforming requires the use of heat and air in forming the blister. The lid stock material is sealed to the blister cavity material for a defined time (the stroke of the machine) at the point where the heat plate closes on the two materials.

Forming station—Prior to entering the forming station, the blister material passes through a heating unit where the blister material is heated uniformly in stages to ensure proper formation. Because different plastics have different softening points, careful attention must be paid to determining the proper temperature of the heating station, which often has multiple temperature zones. The temperature, based on the blister material used and on the speed at which that material travels through the heating station, is a critical parameter for optimal performance. At the forming station, the blister material is heated to the point where the plastic softens sufficiently to allow the cavity to be formed. The blister material is drawn from a reel-mounted roll (referred to as the web) and pulled through the machine. A splicing table is located at the reel unwind to provide room for a second roll of blister material to be readily available for splicing and resumption of the packaging process. An unwind device may be installed to aid in moving the blister material from the roll as adjusted for a specific index.

Once the blister material is properly heated, compressed air is generally used to form the blister cavity. Upper and lower forming dies close on the blister material as air is introduced, forming a blister that corresponds to the size of the cavity. A plug assist may be necessary, depending on the material and size of the cavity. The plug assist ensures a uniform thinning of the blister material to optimize the protective characteristics of the formed material. Once the blister material is formed into the desired blister configuration, it is advanced to the filling station.

Filling station—The product is loaded into the blister cavity at this station. An automated filling device may be used, or the cavities may be hand filled. The critical parameter at this station is proper filling of the formed blisters.

Accessed from 167.78.4.19 by James Cumbie (ocean22) on Mon Sep 09 15:04:23 EDT 2013

Sealing station—At this station, the lid stock is sealed to the filled blister cavity, using heat and pressure for a defined dwell time. The critical parameters to be considered at this station are temperature, pressure, and dwell time.

The lid stock material is staged on a roll above the blister cavity and may be preprinted or printed online. Lot numbers and expiration dates may be applied at this point. Preprinted lid stock materials will require a print registration system to control the position of the printing relative to the blister cavity. The critical parameters at this part of the station include legible and correct labeling.

Finishing station—The finishing station encompasses all other steps in the packaging process, including embossing, perforation, and cutting. Embossing involves application of a lot number and expiration date to the package. Steel type is used to emboss information on the edges of the blister package. One of the critical parameters at this station is package integrity. It is important that the embossing, perforation, and cutting processes do not compromise the blister, lid, or seal. The quality of the embossing is another critical parameter in the process. The embossing must be legible and correct, and must include all required information.

Pouch unit-dose packages: The pouch process is also a form, fill, and seal operation, but it does not provide a defined, formed cavity as does the thermoforming process. Although the equipment used to form pouch unit-dose packages may function differently from that described for thermoforming a blister, the main operations (form, fill, and seal) and critical parameters at those stations are quite similar. [NOTE—See the critical parameters defined in the section on thermoforming.]

The strip-pack process involves the drug product being dosed into a three-sided, formed pouch. Once filled with the drug, the machine seals the pouch, forming a strip of sealed unit-dose pouches. The basic flow of the process begins with the drug situated above the pouch material. One roll of strip-pack material is used to form the pouch. This is accomplished by moving the material over a device that forces the material to fold into two equal sides. The sides and bottom are sealed prior to dosing. The strip pack may be cut later during the equipment processing or roll continuously and be manually cut. Temperature and dwell time are the main critical factors for this equipment.

Preformed unit-dose packages: Preformed containers are sealed either by heat or by adhesion. Heat sealers may be manual units requiring hand pressure application or automated units that provide a more controlled pressure for sealing.

Heat sealing may be accomplished through the use of manual tabletop equipment, which is generally operated at a set pressure. Critical parameters with these devices are pressure and temperature control because undesirable variation in these parameters may yield inadequate seals.

Critical parameters: In order to ensure that the finished container performs as intended, qualification of critical parameters should be determined. Typically, validation of a packaging line consists of qualification of the installation, operation, and performance of a packaging system.

Installation qualification—Equipment should be installed and found to be in proper working condition prior to use.

Operational qualification—Operational qualification should be performed to establish that the equipment operates within the manufacturer's specified ranges. Incoming utilities for the equipment, such as air, electricity, etc., should be monitored and checked periodically.

Performance qualification—Performance qualification should be done to establish that the equipment performs properly with the required materials to produce a container that functions as intended. The critical parameters include forming temperature and pressure, sealing temperature and pressure, and dwell time at the seal station. Qualified ranges should be readily available in a reference source for the setup of equipment. Re-evaluation may be necessary with changes to equipment, materials, or process.

In-process inspections: Strict controls covering the packaging and labeling processes should be in place. The final container should be evaluated for performance in each of the stations previously described. Specifically, the formed container should be inspected visually to ensure that it is properly formed. Evaluation of the filling station should include a check to ensure that the unit dose is properly filled (i.e., that the correct product is present). The sealing station should be evaluated to ensure that a proper seal has been made and that the moisture permeation specifications of the sealed container have been met. A visual examination of the package should be performed to ensure that the final steps of the packaging process are acceptable.

Repackagers and dispensers should use a standard inspection plan to verify the adequacy of the package. A visual inspection should be performed to verify that the correct product is in the proper packaging materials with correct labeling. Seal integrity should be evaluated, using vacuum testing,[2] helium testing, tear testing, and other testing methods suitable to establish whether seal integrity is maintained.

PERFORMANCE

The primary purpose of the unit-dose package used in the packaging of a drug preparation is to ensure that, until its intended expiration date, there is adequate protection from the environment as the dosage form is distributed and stored. It is also essential that the materials used do not interact with the dosage form.

When determining what type of package to use in the repackaging operation, consideration must be given to the dosage form's sensitivities (if any) to the storage and distribution environments (e.g., temperature, light, and moisture).

The properties of the finished container are defined by the materials used in constructing the unit-dose container, and by the process used to form and seal the container. As discussed in *Materials*, there is a wide variety of commercially available film

[2] Vacuum testing consists of placing samples from the packaging operation into a jar filled with water. A lid is placed over the samples to fully immerse them in the water. A container lid is applied to create a seal effective enough to create approximately 25 cm of vacuum. The vacuum pump is set, and the samples are tested for approximately 1 minute, removed from the water, wiped down, and opened to determine whether the inside of the unit-dose cavity or pouch is wet. This process should be adjusted until it is under control, and additional testing may be performed to ensure that the seal integrity is consistently acceptable. Wetness indicates a defective seal and therefore the potential for the drug to degrade when exposed to the atmosphere. Defective packages must be removed from further use.

Copyright (c) 2013 The United States Pharmacopeial Convention. All rights reserved.

structures that provide unit-dose containers with a range of moisture and light protection. Suppliers of these materials typically provide quantitative data, obtained from well-established test methods, to highlight the protective properties of their material. These data are based on flat sheets of the film, not on the formed container.

It is critical to understand that once the film is formed, protective properties change because the overall thickness of the film decreases as the blister cavity is formed. Usually the change is a decrease, especially in the case of barrier properties. However, the extent of change will vary with the type of film structure used and is also highly dependent on the container-forming process used (see *Process*). Further, a suboptimal seal on the formed container will decrease the protective properties of the container. Insufficient temperature, time, or pressure during a heat-seal operation may enable the passage of moisture or oxygen through the seal area over time, which may have an effect on the dosage form. In addition, if the seal area is designed with insufficient surface area, the same problem may occur. To ensure a good seal, a minimum sealing distance of 3 mm from the edge of the blister cavity to the nearest edge or perforation is recommended. Therefore, it is important to measure the performance of the formed and sealed container rather than the performance of the flat sheet.

Moisture is a critical factor in preparation integrity. *Containers—Performance Testing* ⟨671⟩ describes how to determine and classify moisture permeation rates. If the manufacturer's labeling includes "Protect From Moisture," the repackager shall utilize a high barrier film.

If light protection is required for a drug preparation, the repackager should follow the requirements for light transmission established under *Containers—Performance Testing* ⟨671⟩. Again, this testing should be conducted on the formed container, because the light-protective properties of the film are compromised once the film is thinned during the forming process. It is recommended that these tests, in conjunction with any guidance provided by the manufacturer, be considered appropriate for any container–closure system used in repackaging a drug preparation.

BEYOND-USE-DATE

In the absence of stability data for the drug product in the repackaged container, the beyond-use dating period is one year or the time remaining until the expiration date, whichever is shorter. If current stability data are available for the drug product in the repackaged container, the length of time established by the stability study may be used to establish the beyond-use date, but must not exceed the manufacturer's expiration date.

As stated in the *General Notices and Requirements*, the dispenser must maintain the facility where the dosage forms are packaged and stored at a temperature such that the mean kinetic temperature is not greater than 25°. The plastic material used in packaging the dosage forms must afford better protection than polyvinyl chloride, which does not provide adequate protection against moisture permeation. Records must be kept of the temperature of the facility where the dosage forms are stored, and of the plastic materials used in packaging.

MINIMUM REQUIREMENTS

The previous sections serve as a general introduction to repackaging by providing a basic understanding of materials selection, the form-fill-seal process, and the importance of performance of the sealed container. In this section, certain minimum requirements for repackaging, which must be met, are described in more detail.

Personnel: Each person with responsibility for the repackaging of a preparation shall have the education, training, and experience, or any combination thereof, to perform assigned functions in a manner such that the safety, identity, strength, quality, purity, potency, and pharmaceutical elegance of the drug dosage form are retained. Training should be documented.

Personnel engaged in the repackaging of a preparation shall wear clean clothing appropriate for the duties or processes performed.

Facility: The repackaging facility may require areas of low relative humidity, and temperature conditions should meet controlled room temperature requirements specified in *Packaging and Storage Requirements* ⟨659⟩.

Equipment: Equipment used in the repackaging of a preparation shall be of appropriate design and suitably located to facilitate operations for its intended use. Its design should allow for cleaning to preclude cross-contamination as well as for maintenance to be performed. Equipment shall be constructed so that those surfaces that contact components or a preparation are not reactive, additive, or absorptive. Any substances required for operation, such as lubricants or coolants, shall not come into contact with components or a preparation.

Equipment and utensils shall be cleaned, maintained, and sanitized at appropriate intervals to prevent malfunctions or contamination. Preventive maintenance should be performed at appropriate intervals in accordance with the equipment manufacturer's recommendation. Any instruments used to monitor critical parameters should be calibrated on a defined schedule.

Process: Steps should be taken to determine the critical process parameters (e.g., seal temperature, dwell time) in operating the equipment. Set points for these parameters should be documented and procedures established to ensure that they are adhered to each time the equipment is operated.

Labeling: The labeling requirements for a commercial repackager and a pharmacist are different. For example, the commercial repackager must comply with 21 CFR 201.1, but the pharmacist or dispenser does not have to comply with this requirement. If stability data are unavailable, the dispenser shall repackage only an amount of stock sufficient for a limited time and shall include product name and strength, lot number, manufacturer, and appropriate beyond-use date on the label. When quantities are repackaged in advance of immediate needs, each preparation must bear an identifying label, and the dispenser is required to maintain suitable repackaging records showing the name of the manufacturer, lot number, expiration date, date of repackaging, and designa-

Accessed from 167.78.4.19 by James Cumbie (ocean22) on Mon Sep 09 15:04:23 EDT 2013

tion of persons responsible for repackaging and for checking. The repackager or dispenser will use documented controls to prevent labeling errors.

Materials: The repackager or dispenser shall place an appropriate beyond-use date on the label and package in appropriate materials. Materials used by the repackager shall not be reactive, additive, or absorptive, and must meet the requirements described in 21 CFR 175 and 177.

Storage: The dispenser shall rotate and monitor stock closely to ensure that the dispensing of preparations is on a first-in-first-out (FIFO) basis. The repackager or dispenser shall store preparations under required environmental conditions (e.g., controlled room temperature with a mean kinetic temperature not higher than 25°).

Drug product: The repackager or dispenser shall examine preparations for evidence of instability such as change in color or odor, and shall exercise professional judgment as to the acceptability of a package.

Complaints: The repackager or dispenser will maintain written procedures describing the handling of written and oral complaints regarding a drug product and will ensure that complaints are investigated and appropriately resolved.

Returned goods: Policies and procedures relating to returned goods should be developed to ensure proper handling.

Reprocessing: Reprocessing of repackaged unit-dose containers (i.e., removing medication from one unit-dose container and placing it into another unit-dose container) shall not be done. However, reprocessing of the secondary package (e.g., removing the blister card from the cardboard carrier and placing the blister card into another cardboard carrier) is allowed provided the original beyond-use date is maintained, and provided the integrity of the blister is ensured.

Special considerations: If a product is known to be oxygen sensitive or if it exhibits extreme moisture or light sensitivity (e.g., cold form foil), it shall not be repackaged. If a product is refrigerated, it shall not be repackaged unless proper environmental conditions and suitable materials are available. Certain drug products (such as oncologic agents, hormones, or penicillin derivatives) require special handling because they are considered very potent or toxic, and because transfer of any portion of these products to another product could have deleterious effects.

REPACKAGING NONSTERILE SOLID AND LIQUID DOSAGE FORMS INTO SINGLE-UNIT CONTAINERS AND UNIT-DOSE CONTAINERS

The following guidance is intended for those engaged in pharmaceutical dispensing, and does not apply to commercial dispensing. An official dosage form is required to bear on its label an expiration date assigned for the particular formulation and package of the article. This date limits the time during which the product may be dispensed or used. Because the expiration date stated on the original manufacturer's container–closure system has been determined for the drug in that particular system and is not intended to apply to a product that has been repackaged in a different container, repackaged drugs dispensed pursuant to a prescription are exempt from using the expiration date from the original manufacturer's package. However, under no circumstance should the repackaged pharmaceutical preparation's expiration date exceed the original manufacturer's expiration date. It is necessary, therefore, that other precautions be taken by the dispenser to preserve the strength, quality, and purity of drugs that are repackaged for ultimate distribution or sale to patients.

The following guidelines and requirements are applicable where official dosage forms are repackaged into single-unit or unit-dose containers or mnemonic packs for dispensing pursuant to prescription.

Labeling: It is the responsibility of the dispenser to place a suitable expiration date on the label, taking into account the nature of the drug repackaged, any packaging and expiration dating information in the manufacturer's product labeling, the characteristics of the containers, and the storage conditions to which the article may be subjected. Repackaged dosage forms must bear on their labels expiration dates as determined from information in the product labeling (see *General Notices and Requirements, Preservation, Packaging, Storage, and Labeling*). Each single-unit or unit-dose container bears a separate label, unless the device holding the unit-dose form does not allow for the removal or separation of the intact single-unit or unit-dose container therefrom.

Storage: Store the repackaged article in a humidity-controlled environment and at the temperature specified in the individual monograph or in the product labeling. For further directions, see *Packaging and Storage Requirements* ⟨659⟩.

A refrigerator or freezer shall not be considered to be a humidity-controlled environment. Drugs that are to be stored at a cold temperature in a refrigerator or freezer must be protected during storage in the refrigerator or freezer. An outer container may be necessary for such protection; it is recommended that the drug monograph be referenced for storage.

Reprocessing: Reprocessing of repackaged unit-dose containers (i.e., removing a dosage unit from one unit-dose container and placing it in another unit-dose container) shall not be done. However, reprocessing of the secondary package (e.g., removing the blister card from the cardboard carrier and placing the blister card into another cardboard carrier) is allowed provided that the original expiration date is maintained.

CUSTOMIZED PATIENT MEDICATION PACKAGES

In lieu of dispensing two or more prescribed drug products in separate containers, a pharmacist may, with the consent of the patient, the patient's caregiver, or a prescriber, provide a customized patient medication package (patient med pak).[3]

[3] It should be noticed that for patient med paks there is no special exemption from the requirements of the Poison Prevention Packaging Act. Thus, the patient med pak, if it does not meet child-resistant standards, shall be placed in an outer package that does comply, or the necessary consent of the purchaser or physician to dispense in a container not intended to be child-resistant shall be obtained.

Copyright (c) 2013 The United States Pharmacopeial Convention. All rights reserved.

A patient med pak, i.e., a package prepared by a pharmacist for a specific patient, comprises a series of containers and contains two or more prescribed solid oral dosage forms. The patient med pak is so designed, or each container is so labeled, as to indicate the day and time, or period of time, that the container contents are to be taken.

It is the responsibility of the dispenser to instruct the patient or caregiver on the use of the patient med pak.

Label: The patient med pak shall bear a label stating the following:

1. The name of the patient;
2. A serial number for the patient med pak itself and a separate identifying serial number for each of the prescription orders for each of the drug products contained therein;
3. The name, strength, physical description or identification, and total quantity of each drug product contained therein;
4. The directions for use and cautionary statements, if any, contained in the prescription order for each drug product therein;
5. Any storage instructions or cautionary statements required by the official compendia;
6. The name of the prescriber of each drug product;
7. The date of preparation of the patient med pak and the beyond-use date or period of time assigned to the patient med pak (such beyond-use date or period of time shall be not longer than the shortest recommended beyond-use date for any dosage form included therein or not longer than 60 days from the date of preparation of the patient med pak, and shall not exceed the shortest expiration date on the original manufacturer's bulk containers for the dosage forms included therein); alternatively, the package label shall state the date of the prescription(s) or the date of preparation of the patient med pak, provided the package is accompanied by a record indicating the start date and the beyond-use date;
8. The name, address, and telephone number of the dispenser (and the dispenser's registration number where necessary); and
9. Any other information, statements, or warnings required for any of the drug products contained therein.

If the patient med pak allows for the removal or separation of the intact containers therefrom, each individual container shall bear a label identifying each of the drug products contained therein.

Labeling: The patient med pak shall be accompanied by a patient package insert, in the event that any medication therein is required to be dispensed with such insert as accompanying labeling. Alternatively, such required information may be incorporated into a single, overall educational insert provided by the pharmacist for the total patient med pak.

Packaging: In the absence of more stringent packaging requirements for any of the drug products contained therein, each container of the patient med pak shall comply with the moisture permeation requirements for a Class B single-unit or unit-dose container (see *Containers—Performance Testing* ⟨671⟩). Each container shall be either nonreclosable or so designed as to show evidence of having been opened.

Guidelines: It is the responsibility of the dispenser, when preparing a patient med pak, to take into account any applicable compendial requirements or guidelines and the physical and chemical compatibility of the dosage forms placed within each container, as well as any therapeutic incompatibilities that may attend the simultaneous administration of the medications. In this regard, pharmacists are encouraged to report to USP headquarters any observed or reported incompatibilities. Once a medication has been placed in a patient med pak with another solid dosage form, it may not be returned to stock, redistributed, or resold if unused.

Recordkeeping: In addition to any individual prescription filing requirements, a record of each patient med pak shall be made and filed. Each record shall contain, as a minimum:

1. The name and address of the patient;
2. The serial number of the prescription order for each drug product contained therein;
3. The name of the manufacturer or labeler and lot number for each drug product contained therein;
4. Information identifying or describing the design, characteristics, or specifications of the patient med pak sufficient to allow subsequent preparation of an identical patient med pak for the patient;
5. The date of preparation of the patient med pak and the beyond-use date that was assigned;
6. Any special labeling instructions; and
7. The name or initials of the pharmacist who prepared the patient med pak.

• *USP36*

Delete the following:

• ⟨1146⟩ PACKAGING PRACTICE—REPACKAGING A SINGLE SOLID ORAL DRUG PRODUCT INTO A UNIT-DOSE CONTAINER

INTRODUCTION

Repackaging of solid oral drug products, such as tablets and capsules, into unit-dose configurations is common practice both for the pharmacy that is dispensing drugs pursuant to a prescription and for the pharmaceutical repackaging firm. This general chapter

Accessed from 167.78.4.19 by James Cumbie (ocean22) on Mon Sep 09 15:04:23 EDT 2013

contains minimum standards to be used as a guideline for repackaging practices. This guideline is not intended to replace or supplant the requirements of regulatory agencies.

Repackaging preparations into unit-dose configurations is an important aspect of pharmaceutical care and of optimization of patient compliance. For purposes of this chapter, there are two types of repackaging: the first involves pharmacies that dispense prescription drugs; the second concerns commercial pharmaceutical repackaging firms.

NOMENCLATURE AND DEFINITIONS

DISPENSER—A dispenser is a licensed or registered practitioner who is legally responsible for providing a preparation for patient use, with a specific patient label, pursuant to a prescription or a medication order. In addition, dispensers may prepare limited quantities in anticipation of a prescription or medication order from a physician. Dispensers are governed by the board of pharmacy of the individual state.

PACKAGE—The term "package" is synonymous with the term "container." See *Containers* in ⟨659⟩ *Packaging and Storage Requirements*.

PHARMACY—A pharmacy is an establishment that is legally responsible for providing the drug preparation for patient use, with a specific patient label, pursuant to a prescription or a medication order. The terms dispenser and pharmacy are used interchangeably.

REPACKAGING—Repackaging is the act of removing a preparation from its original primary container and placing it into another primary container, usually of smaller size.

REPACKAGER—A repackager is an establishment that repackages drugs and sends them to a second location in anticipation of a need. Repackaging firms repackage preparations for distribution (e.g., for resale to distributors, hospitals, or other pharmacies), a function that is beyond the regular practice of a pharmacy. Distribution is not patient specific in that there are no prescriptions. Unlike dispensers, repackaging firms are required to register with the FDA and to comply with the Current Good Manufacturing Practice regulations in 21 CFR 210 and 211.

MATERIALS

Blister packages offer a wide array of designs both in functionality and in appearance. Various packaging materials are used to create blisters that are tailored to provide optimum performance. The blister container consists of two components: the blister, which is the formed cavity that holds the product, and the lid stock, which is the material that seals to the blister, as shown below.

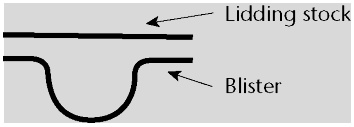

Schematic Presentation of a Typical Blister Pack

Because of the variety of blister films available, film selection should be based upon the degree of protection required. The choice of lid stock depends on how the blister is to be used, but generally the lid stock is made of aluminum foil. The material used to form the cavity is typically a plastic, which can be designed to protect the dosage form from moisture. There are widely varying degrees of moisture protection now available. For purposes of this general chapter, they are referred to as nominal, medium, high, and extreme moisture barrier properties.

Polyvinyl Chloride—The most commonly used blister material is polyvinyl chloride (PVC). This material, which provides a nominal or zero barrier to moisture, is used when the product does not require effective moisture protection. PVC is available in a range of gauges and can be made opaque or can be tinted with pigments to block out specific light wavelengths.

The thickness of the PVC used is determined by the depth and size of the cavity to be formed. Because the plastic thins during the blister-forming process, care should be taken to ensure that the finished blister provides sufficient protection from light (if required) and that it is strong enough to adequately protect the dosage form. Common gauges of PVC used in the pharmaceutical industry range from 7.5 to 15 mil (0.0075 to 0.015 inch).

Barrier Films—Many drug preparations are extremely sensitive to moisture and therefore require high barrier films. Several materials may be used to provide moisture protection. Barrier films commonly used in the pharmaceutical industry are described below.

PVC/PCTFE Laminations—Polychlorotrifluoroethylene (PCTFE) film[1] is a thermoplastic film made from polychlorotrifluoroethylene fluoropolymer. The PCTFE film is laminated to the PVC by an adhesive layer between the PVC and the PCTFE film (duplex structure)

Duplex Structure

[1]PCTFE film is available from Allied Signal (as Aclar) and from other sources.

Copyright (c) 2013 The United States Pharmacopeial Convention. All rights reserved.

or by a layer of polyethylene (PE) between the PVC-adhesive and the PCTFE-adhesive layers (triplex structure).

Triplex Structure

By using various gauges of the PCTFE film, *medium* to *extreme* moisture barriers can be obtained.

PVC/PVdC Laminations—PVC/PVdC is a film in which the PVC is coated with an emulsion of polyvinylidene chloride (PVdC).

Duplex Structure

The PVdC layer is specified in g per m^2 and can be constructed to provide *medium* to *high* barrier protection. The coating weights commonly used in the pharmaceutical industry are 40, 60, and 90 g per m^2, and the film is offered with or without a middle layer of polyethylene (PE). The polyethylene is used with heavier coating weights, such as 60 and 90 g per m^2, to improve the thermoforming characteristics of the blister cavity.

Triplex Structure

Polypropylene—Because of its morphology, polypropylene (PP) serves as a good moisture barrier, its spherulitic structure creating an arduous path for water molecules to traverse. Although not commonly used as a pharmaceutical blister film in the U.S., PP provides an economical alternative to medium barrier materials and is used in Europe as an alternative to PVC.

Cold Form Foil—This material is used for products that are extremely hygroscopic or light sensitive. It is an extreme moisture barrier and consists of three layers: PVC, aluminum foil, and nylon.

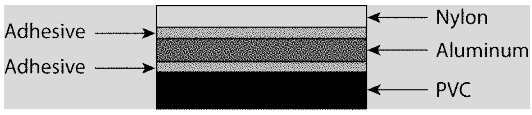

Cold Form Foil

Lid Stock—Lid stock is sealed to the molded blister as described above. Different designs of lid stocks are available, and selection of a particular design depends on how the package will be used. Standard designs—peelable, child-resistant peelable, and push-through—are described below. The primary component of lid stock is typically aluminum, and its gauge varies from 18 to 25 µm (0.0078 to 0.001 inch). The side of the aluminum foil laminate in contact with the product provides the heat-sealable layer that forms the seal to the blister material. The heat-seal coating should be capable of forming an adequate seal with the blister film to which it is intended to seal. The materials used in the makeup of the heat-seal layer meet 21 CFR 175 and 177.

Peelable—Peelable foil, commonly used in an institutional setting, consists of several layers, as shown below, and can be peeled away from the blister. [NOTE—For child-resistant peelable foil, a layer of polyester with the appropriate adhesives would be added.] With the peelable foil lid stock, which is used in conjunction with blister tooling, a three-step process is required to open the blister.

Peelable Foil Construction

Accessed from 167.78.4.19 by James Cumbie (ocean22) on Mon Sep 09 15:04:23 EDT 2013

First, the blister cavity must be separated from the rest of the blister card. Next, the paper and polyester layers are pulled back from an unsealed area. Finally, the product is pushed through the remaining aluminum foil. It is important to note that use of this type of foil structure helps make the package more child resistant. However, if child-resistant packaging is required, the package design should be tested in accordance with the protocol described in 16 CFR 1700, the Poison Prevention Packaging Act.

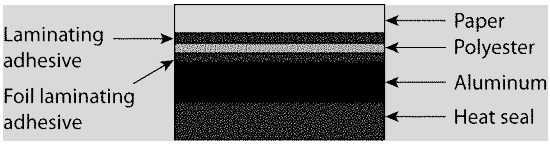

Child-Resistant Foil

Push-Through—There are two commonly used types of push-through foil: one with a paper outer layer separated from the aluminum by a layer of adhesive and one without paper.

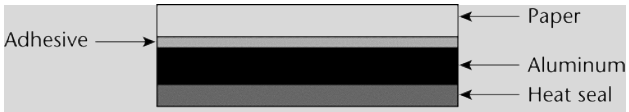

Push-through foil (with paper)

Push-through foil (no paper)

The paper outer layer serves as an aesthetic and makes it possible to print on the back of the blister.

Other Package Styles—Other types of packages used for unit-dose packaging of solid dosage forms are strip packs, pouches, and sachets.

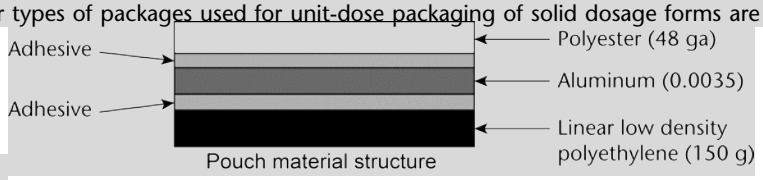

Pouch material structure

PROCESS

Unit-dose packages can be formed and sealed in a variety of ways. Larger scale repackagers may use thermoformers that accomplish these functions in-line, while smaller repackagers may purchase preformed blister material. This section begins with an overview of the process involved in thermoforming a blister, the fundamental process that also applies to other unit-dose package types such as pouches. The overview is not intended to be all-encompassing, but it highlights the major operations along with their critical parameters.

Thermoforming a Blister Unit-Dose Package—The complete thermoforming process consists of four basic stations where the following operations occur: forming, filling, sealing, and finishing. Thermoforming requires the use of heat and air in forming the blister. The lid stock material is sealed to the blister cavity material for a defined time (the stroke of the machine) at the point where the heat plate closes on the two materials.

Forming Station—Prior to entering the forming station, the blister material passes through a heating unit where the blister material is heated uniformly in stages to ensure proper formation. Because different plastics have different softening points, careful attention must be paid to determining the proper temperature of the heating station, which often has multiple temperature zones. The temperature, based on the blister material used and on the speed at which that material travels through the heating station, is a critical parameter for optimal performance. At the forming station the blister material is heated to the point where the plastic softens sufficiently to allow the cavity to be formed. The blister material is drawn from a reel-mounted roll (referred to as the web) and pulled through the machine. A splicing table is located at the reel unwind to provide room for a second roll of blister material to be readily available for splicing and resumption of the packaging process. An unwind device may be installed to aid in moving the blister material from the roll as adjusted for a specific index.

Once the blister material is properly heated, compressed air is generally used to form the blister cavity. Upper and lower forming dies close on the blister material as air is introduced, forming a blister that corresponds to the size of the cavity. A plug assist may be necessary, depending on the material and size of the cavity. The plug assist ensures a uniform thinning of the blister material to optimize the protective characteristics of the formed material. Once the blister material is formed into the desired blister configuration, it is advanced to the filling station.

Filling Station—The product is loaded into the blister cavity at this station. An automated filling device may be used, or the cavities may be hand filled. The critical parameter at this station is proper filling of the formed blisters.

Copyright (c) 2013 The United States Pharmacopeial Convention. All rights reserved.

Sealing Station—At this station, the lid stock is sealed to the filled blister cavity, using heat and pressure for a defined dwell time. The critical parameters to be considered at this station are temperature, pressure, and dwell time.

The lid stock material is staged on a roll above the blister cavity and may be preprinted or printed on-line. Lot numbers and expiration dates may be applied at this point. Preprinted lid stock materials will require a print registration system to control the position of the printing relative to the blister cavity. The critical parameters at this part of the station include legible and correct labeling.

Finishing Station—The finishing station encompasses all other steps in the packaging process, including embossing, perforation, and cutting. Embossing involves application of a lot number and expiration date to the package. Steel type is used to emboss information on the edges of the blister package. One of the critical parameters at this station is package integrity. It is important that the embossing, perforation, and cutting processes do not compromise the blister, lid, or seal. The quality of the embossing is another critical parameter in the process. The embossing must be legible, and correct and must include all required information.

Pouch Unit-Dose Packages—The pouch process is also a form, fill, and seal operation, but it does not provide a defined, formed cavity as does the thermoforming process. Although the equipment used to form pouch unit-dose packages may function differently from that described for thermoforming a blister, the main operations (form, fill, and seal) and critical parameters at those stations are quite similar. [NOTE—See the aforementioned critical parameters defined in the section on thermoforming.]

The strip-pack process involves the drug product being dosed into a three-sided, formed pouch. Once filled with the drug, the machine seals the pouch, forming a strip of sealed unit-dose pouches. The basic flow of the process begins with the drug situated above the pouch material. One roll of strip-pack material is used to form the pouch. This is accomplished by moving the material over a device that forces the material to fold into two equal sides. The sides and bottom are sealed prior to dosing. The strip pack may be cut later during the equipment processing or roll continuously and be manually cut. Temperature and dwell time are the main critical factors for this equipment.

Preformed Unit-Dose Packages— Preformed containers are sealed either by heat or by adhesion. Heat sealers may be manual units requiring hand pressure application or automated units that provide a more controlled pressure for sealing.

Heat sealing may be accomplished through the use of manual tabletop equipment. This equipment is generally operated at a set pressure. Critical parameters with these devices are pressure and temperature control because undesirable variation in these parameters may yield inadequate seals.

Critical Parameters—In order to ensure that the finished container performs as intended, qualification of critical parameters should be determined. Typically, validation of a packaging line consists of qualification of the installation, operation, and performance of a packaging system.

Installation Qualification—Equipment should be installed and found to be in proper working condition prior to use.

Operational Qualification—Operational qualification should be performed to establish that the equipment operates within the manufacturer's specified ranges. Incoming utilities for the equipment, such as air, electricity, etc., should be monitored and checked periodically.

Performance Qualification—Performance qualification should be done to ensure that the equipment is performing properly with the required materials to produce a container that functions as intended. The critical parameters include forming temperature and pressure, sealing temperature and pressure, and dwell time at the seal station. Qualified ranges should be readily available in a reference source for the setup of equipment. Re-evaluation may be necessary with changes to equipment, materials, or the process.

In-Process Inspections—Strict controls covering the packaging and labeling processes should be in place. The final container should be evaluated for performance in each of the stations described above. Specifically, the formed container should be inspected visually to ensure that it is properly formed. Evaluation of the filling station should include a check to ensure that the unit dose is properly filled (i.e., that the correct product is present). The sealing station should be evaluated to ensure that a proper seal has been made and that the moisture permeation specifications of the sealed container have been met. A visual examination of the package should be performed to ensure that the final steps of the packaging process are acceptable.

Repackagers and dispensers should use a standard inspection plan to verify the adequacy of the package. A visual inspection should be performed to verify that the correct product is in the proper packaging materials with correct labeling. Seal integrity should be evaluated, using vacuum testing,[2] helium testing, tear testing, and other testing methods suitable to establish whether seal integrity is maintained.

PERFORMANCE

The primary purpose of the unit-dose package used in the packaging of a drug preparation is to ensure that until its intended expiration date there is adequate protection from the environment as the dosage form is distributed and stored. It is also essential that the materials used do not interact with the dosage form.

When determining what type of package to use in the repackaging operation, consideration must be given to the dosage form's sensitivities (if any) to the storage and distribution environments (e.g., temperature, light, and moisture).

The materials used in constructing the unit-dose container as well as the process of forming and sealing the container all together define the properties of the finished container. As discussed in *Materials*, there is a wide variety of commercially available film

[2] Vacuum testing consists of placing samples from the packaging operation into a jar filled with water. A lid is placed over the samples to fully immerse them in the water. A container lid is applied to create a seal effective enough to create approximately 25 cm of vacuum. The vacuum pump is set, and the samples are tested for approximately 1 minute, removed from the water, wiped down, and opened to determine whether the inside of the unit-dose cavity or pouch is wet. This process should be adjusted until it is under control, and additional testing may be performed to ensure that the seal integrity is consistently acceptable. Wetness indicates a defective seal and therefore the potential for the drug to degrade when exposed to the atmosphere. Defective packages must be removed from further use.

Accessed from 167.78.4.19 by James Cumbie (ocean22) on Mon Sep 09 15:04:23 EDT 2013

structures that provide unit-dose containers with a range of moisture and light protection. Suppliers of these materials typically provide quantitative data, obtained from well-established test methods, to highlight the protective properties of their material. These data are based on flat sheets of the film, not on the formed container.

It is critical to understand that once the film is formed, protective properties change because the overall thickness of the film decreases as the blister cavity is formed. Usually the change is a decrease, especially in the case of barrier properties. However, the extent of change will vary with the type of film structure used and is also highly dependent on the container-forming process used (see *Process*). Further, a suboptimal seal on the formed container will decrease the protective properties of the container. Insufficient temperature, time, or pressure during a heat-seal operation may enable the passage of moisture or oxygen through the seal area over time, which may have an effect on the dosage form. In addition, if the seal area is designed with insufficient surface area, the same problem may occur. To ensure a good seal, a minimum sealing distance of 3 mm from the edge of the blister cavity to the nearest edge or perforation is recommended. Therefore, it is important to measure the performance of the formed and sealed container rather than the performance of the flat sheet.

Moisture is a critical factor in preparation integrity. *Containers—Performance Testing* ⟨671⟩ describes how to determine and classify moisture permeation rates. If the manufacturer's labeling includes "Protect From Moisture," the repackager shall utilize a high barrier film.

If light protection is required for a drug preparation, the repackager should follow the requirements for light transmission established under *Containers—Performance Testing* ⟨671⟩. Again, this testing should be conducted on the formed container, because the light protective properties of the film are compromised once the film is thinned during the forming process. It is recommended that these tests, in conjunction with any guidance provided by the manufacturer, be considered appropriate for any container–closure system used in repackaging a drug preparation.

BEYOND-USE DATE

In the absence of stability data for the drug product in the repackaged container, the beyond-use dating period is one year or the time remaining of the expiration date, whichever is shorter. If current stability data are available for the drug product in the repackaged container, the length of time established by the stability study may be used to establish the beyond-use date but must not exceed the manufacturer's expiration date.

As stated in the *General Notices and Requirements*, the dispenser must maintain the facility where the dosage forms are packaged and stored at a temperature such that the mean kinetic temperature is not greater than 25°. The plastic material used in packaging the dosage forms must afford better protection than polyvinyl chloride, which does not provide adequate protection against moisture permeation. Records must be kept of the temperature of the facility where the dosage forms are stored, and of the plastic materials used in packaging.

MINIMUM REQUIREMENTS

The previous sections serve as a general introduction to repackaging by providing a basic understanding of materials selection, the form-fill-seal process, and the importance of performance of the sealed container. In this section, certain minimum requirements for repackaging, which must be met, are described in more detail.

Personnel—Each person with responsibility for the repackaging of a preparation shall have the education, training, and experience, or any combination thereof, to perform assigned functions in a manner such that the safety, identity, strength, quality, purity, potency, and pharmaceutical elegance of the drug dosage form are retained. Training should be documented.

Personnel engaged in the repackaging of a preparation shall wear clean clothing appropriate for the duties or processes performed.

Facility—The repackaging facility may require areas of low relative humidity, and temperature conditions should meet controlled room temperature requirements specified in the *General Notices*.

Equipment—Equipment used in the repackaging of a preparation shall be of appropriate design and suitably located to facilitate operations for its intended use. Its design should allow for cleaning to preclude cross-contamination as well as for maintenance to be performed. Equipment shall be constructed so that those surfaces that contact components or a preparation are not reactive, additive, or absorptive.

Any substances required for operation, such as lubricants or coolants, shall not come into contact with components or a preparation.

Equipment and utensils shall be cleaned, maintained, and sanitized at appropriate intervals to prevent malfunctions or contamination. Preventive maintenance should be performed at appropriate intervals in accordance with the equipment manufacturer's recommendation. Any instruments used to monitor critical parameters should be calibrated on a defined schedule.

Process—Steps should be taken to determine the critical process parameters (e.g., seal temperature, dwell time) in operating the equipment. Set points for these parameters should be documented and procedures established to ensure that they are adhered to each time the equipment is operated.

Labeling—The labeling requirements for a commercial repackager and a pharmacist are different. For example, the commercial repackager must comply with 21 CFR 201.1, but the pharmacist or dispenser does not have to comply with this requirement. If stability data are unavailable, the dispenser shall repackage only an amount of stock sufficient for a limited time and shall include product name and strength, lot number, manufacturer, and appropriate beyond-use date on the label. When quantities are repackaged in advance of immediate needs, each preparation must bear an identifying label, and the dispenser is required to maintain suitable repackaging records showing the name of the manufacturer, lot number, expiration date, date of repackaging, and designa-

Copyright (c) 2013 The United States Pharmacopeial Convention. All rights reserved.

tion of persons responsible for repackaging and for checking. The repackager or dispenser will use documented controls to prevent labeling errors.

Materials—The repackager or dispenser shall place an appropriate beyond-use date on the label and package in appropriate materials. Materials used by the repackager shall not be reactive, additive, or absorptive, and must meet the requirements described in 21 CFR 175 and 177.

Storage—The dispenser shall rotate and monitor stock closely to ensure that the dispensing of preparations is on a first-in–first-out (FIFO) basis. The repackager or dispenser shall store preparations under required environmental conditions (e.g., controlled room temperature with a mean kinetic temperature not higher than 25°).

Drug Product—The repackager or dispenser shall examine preparations for evidence of instability such as change in color or odor, and shall exercise professional judgment as to the acceptability of a package.

Complaints—The repackager or dispenser will maintain written procedures describing the handling of written and oral complaints regarding a drug product and will ensure that complaints are investigated and appropriately resolved.

Returned Goods—Policies and procedures relating to returned goods should be developed to ensure proper handling.

Reprocessing—Reprocessing of repackaged unit-dose containers (i.e., removing medication from one unit-dose container and placing it into another unit-dose container) shall not be done. However, reprocessing of the secondary package (e.g., removing the blister card from the cardboard carrier and placing the blister card into another cardboard carrier) is allowed provided the original beyond-use date is maintained, and provided the integrity of the blister is ensured.

Special Considerations—If a product is known to be oxygen sensitive or if it exhibits extreme moisture or light sensitivity (e.g., cold form foil), it shall not be repackaged. If a product is refrigerated, it shall not be repackaged unless proper environmental conditions and suitable materials are available. Certain drug products (such as oncologic agents, hormones, or penicillin derivatives) require special handling because they are considered very potent or toxic, and because transfer of any portion of these products to another product could have deleterious effects.

• *USP36*

⟨1151⟩ PHARMACEUTICAL DOSAGE FORMS

GENERAL CONSIDERATIONS

This chapter provides general descriptions of and definitions for drug products, or dosage forms, commonly used to administer the active pharmaceutical ingredient (API). It discusses general principles involved in the manufacture or compounding of these dosage forms and recommendations for proper use and storage. A glossary is provided as a resource on nomenclature.

A dosage form is a combination of API and often excipients to facilitate dosing, administration, and delivery of the medicine to the patient. The design and testing of all dosage forms target drug product quality.[1] A testing protocol must consider not only the physical, chemical, and biological properties of the dosage form as appropriate, but also the administration route and desired dosing regimen. The interrelationships of dosage forms and routes of administration have been summarized in the compendial taxonomy for pharmaceutical dosage forms (see *Figure 1*).[2] The organization of this general information chapter is by the physical attributes of each particular dosage form (*Tier Two*), generally without specific reference to route of administration. Information specific to route of administration is given when needed.

[1] In the United States a drug with a name recognized in *USP–NF* must comply with compendial identity standards or be deemed adulterated, misbranded, or both. To avoid being deemed adulterated such drugs also must comply with compendial standards for strength, quality, or purity, unless labeled to show all respects in which the drug differs. See the Federal Food, Drug, and Cosmetic Act (FDCA), Sections 501(b) and 502(e)(3)(b), and Food and Drug Administration (FDA) regulations at 21 CFR 299.5. In addition, to avoid being deemed misbranded, drugs recognized in *USP–NF* also must comply with compendial standards for packaging and labeling, FDCA Section 502(g). "Quality" is used herein as suitable shorthand for all such compendial requirements. This approach also is consistent with U.S. and FDA participation in the International Conference on Harmonization (ICH). The ICH guideline on specifications, Q6A, notes that "specifications are chosen to confirm the quality of the drug substance and drug product…" and defines "quality" as "The suitability of either a drug substance or drug product for its intended use. This term includes such attributes as identity, strength, and purity."

[2] Marshall K, Foster TS, Carlin HS, Williams RL. Development of a compendial taxonomy and glossary for pharmaceutical dosage forms. *Pharm Forum.* 2003;29(5):1742–1752.

Accessed from 167.78.4.19 by James Cumbie (ocean22) on Mon Sep 09 15:04:23 EDT 2013

Tier One: Route of Administration

Gastro-Intestinal by Injection Mucosal Topical Dermal Inhalation

Tier Two: Dosage Form and Physical Properties

AEROSOLS CAPSULES DRY POWDER INHALER EMULSIONS (CREAMS, LOTIONS)
FOAMS MEDICAL GASES GELS GRANULES MEDICATED GUMS IMPLANTS
INSERTS LIQUIDS LOZENGES OINTMENTS PASTES
TRANSDERMAL SYSTEMS (PATCHES) PELLETS PILLS PLASTERS POWDERS
MEDICATED SOAPS AND SHAMPOOS SOLUTIONS SPRAYS
SUPPOSITORIES SUSPENSIONS TABLETS TAPES

Tier Three: Type of Release Pattern

Immediate Extended Delayed

Tier Four: Comprehensive Testing Strategy

Figure 1. Compendial Taxonomy for Pharmaceutical Dosage Forms.

Tests to ensure compliance with Pharmacopeial standards for dosage form performance fall into one of the following areas.

Dose Uniformity (see also *Uniformity of Dosage Units* ⟨905⟩)—Consistency in dosing for a patient or consumer requires that the variation in the API content of each dosage unit be accurately controlled throughout the manufactured batch or compounded lot of drug product. Uniformity of dosage units typically is demonstrated by one of two procedures: content uniformity or weight variation. The procedure for content uniformity requires the assay of API content of individual units and that for weight variation uses the weight of the individual units to estimate their content. Weight variation may be used where the underlying distribution of API in the blend is presumed to be uniform and well-controlled, as in solutions. In such cases the content of API may be adequately estimated by the net weight. Content uniformity does not rely on the assumption of blend uniformity and can be applied in all cases. Successful development and manufacture of dosage forms requires careful evaluation of API particle or droplet size, incorporation techniques, and excipient properties.

Stability—Drug product stability involves the evaluation of chemical stability, physical stability, and performance over time. The chemical stability of the API in the dosage form matrix must support the expiration dating for the commercially prepared dosage forms and a beyond-use date for a compounded dosage form. Test procedures for potency must be stability indicating (see *Validation of Compendial Procedures* ⟨1225⟩). Degradation products should be quantified. In the case of dispersed or emulsified systems, consideration must be given to the potential for settling or separation of the formulation components. Any physical changes to the dosage form must be easily reversed (e.g., by shaking) prior to dosing or administration. For the example of tablets, capsules, and oral suspensions, in vitro release test procedures such as dissolution and disintegration provide a measure of continuing consistency in performance over time (see *Dissolution* ⟨711⟩, *Disintegration* ⟨701⟩, and *Drug Release* ⟨724⟩).

Bioavailability (see also *In Vitro and In Vivo Evaluation of Dosage Forms* ⟨1088⟩ and *Assessment of Drug Product Performance—Bioavailability, Bioequivalence, and Dissolution* ⟨1090⟩)—Bioavailability is influenced by factors such as the method of manufacture or compounding, particle size, crystal form (polymorph) of the API, the properties of the excipients used to formulate the dosage form, and physical changes as the drug product ages. Assurance of consistency in bioavailability over time (bioequivalence) requires close attention to all aspects of the production (or compounding) and testing of the dosage form. With proper justification, in vitro release (e.g., disintegration and dissolution) testing may sometimes be used as a surrogate to demonstrate consistent availability of the API from the formulated dosage.

Manufacture—Although detailed instructions about the manufacture of any of these dosage forms are beyond the scope of this general information chapter, general manufacturing principles have been included, as well as suggested testing for proper use and storage. Information relative to extemporaneous compounding of dosage forms can be found in *Pharmaceutical Compounding—Nonsterile Preparations* ⟨795⟩ and *Pharmaceutical Compounding—Sterile Preparations* ⟨797⟩.

Route of Administration—The primary routes of administration for pharmaceutical dosage forms can be defined as mucosal, gastrointestinal, parenteral (by injection), inhalation, and topical/dermal, and each has subcategories as needed. Many tests used to ensure quality generally are applied across all of the administration routes, but some tests are specific for individual routes. For example, products intended for injection must be evaluated for *Sterility Tests* ⟨71⟩ and *Pyrogen Test* ⟨151⟩, and the manufacturing process (and sterilization technique) employed for parenterals (by injection) should ensure compliance with these tests. Tests for particulate matter may be required for certain dosage forms depending on the route of administration (e.g., by injection—*Particulate Matter in Injections* ⟨788⟩, or mucosal—*Particulate Matter in Ophthalmic Solutions* ⟨789⟩). Additionally, dosage forms intended for the inhalation route of administration must be monitored for particle size and spray pattern (for a metered-dose inhaler or dry powder inhaler) and droplet size (for nasal sprays). Further information regarding administration routes and suggested testing can be found in the *Guide to General Chapters*, *Charts 4–8* and *10–13*.

An appropriate manufacturing process and testing regimen help ensure that a dosage form can meet the appropriate quality attributes for the intended route of administration.

Copyright (c) 2013 The United States Pharmacopeial Convention. All rights reserved.

Excess Volume in Injections—Each container of an Injection is filled with a volume in slight excess of the labeled "size" or the volume that is to be withdrawn. The excess volumes recommended in the accompanying table are usually sufficient to permit withdrawal and administration of the labeled volumes.

Labeled Size	Recommended Excess Volume	
	For Mobile Liquids	For Viscous Liquids
0.5 mL	0.10 mL	0.12 mL
1.0 mL	0.10 mL	0.15 mL
2.0 mL	0.15 mL	0.25 mL
5.0 mL	0.30 mL	0.50 mL
10.0 mL	0.50 mL	0.70 mL
20.0 mL	0.60 mL	0.90 mL
30.0 mL	0.80 mL	1.20 mL
50.0 mL or more	2%	3%

Labeling Statements—Some dosage forms or articles have mandatory labeling statements that are given in the Code of Federal Regulations (e.g., 21 CFR 201.320 and 21 CFR 369.21). The text of 21 CFR should be consulted to determine the current recommendations.

PRODUCT QUALITY TESTS, GENERAL

ICH Guidance Q6A (available at www.ich.org) recommends specifications (list of tests, references to analytical procedures, and acceptance criteria) to ensure that commercialized drug products are safe and effective at the time of release and over their shelf life. Tests that are universally applied to ensure safety and efficacy (and strength, quality, and purity) include description, identification, assay, and impurities.

Description—According to the ICH guidance a qualitative description (size, shape, color, etc.) of the dosage form should be provided. The acceptance criteria should include the final acceptable appearance. If any of these characteristics change during manufacturing or storage, a quantitative procedure may be appropriate. It specifies the content or the label claim of the article. This parameter is not part of the USP dosage form monograph because it is product specific. USP monographs define the product by specifying the range of acceptable assayed content of the API(s) present in the dosage form, together with any additional information about the presence or absence of other components, excipients, or adjuvants.

Identification—Identification tests are discussed in the *General Notices and Requirements.* Identification tests should establish the identity of the API(s) present in the drug product and should discriminate between compounds of closely related structure that are likely to be present. Identification tests should be specific for the API(s). The most conclusive test for identity is the infrared absorption spectrum (see *Spectrophotometry and Light-Scattering* ⟨851⟩ and *Spectrophotometric Identification Tests* ⟨197⟩). If no suitable infrared spectrum can be obtained, other analytical methods can be used. Near-infrared (NIR) or Raman spectrophotometric methods also could be acceptable as the sole identification method of the drug product formulation (see *Near-Infrared Spectrophotometry* ⟨1119⟩ and *Raman Spectroscopy* ⟨1120⟩). Identification by a chromatographic retention time from a single procedure is not regarded as specific. The use of retention times from two chromatographic procedures for which the separation is based on different principles or a combination of tests in a single procedure can be acceptable (see *Chromatography* ⟨621⟩ and *Thin-Layer Chromatographic Identification Test* ⟨201⟩).

Assay—A specific and stability-indicating test should be used to determine the strength (API content) of the drug product. Some examples of these procedures are *Antibiotics—Microbial Assays* ⟨81⟩, *Chromatography* ⟨621⟩, or *Assay for Steroids* ⟨351⟩. In cases when the use of a nonspecific assay is justified, e.g., *Titrimetry* ⟨541⟩, other supporting analytical procedures should be used to achieve specificity. When evidence of excipient interference with a nonspecific assay exists, a procedure with demonstrated specificity should be used.

Impurities—Process impurities, synthetic by-products, and other inorganic and organic impurities may be present in the API and excipients used in the manufacture of the drug product. These impurities are evaluated by tests in API and excipients monographs. Impurities arising from degradation of the drug substance or from the drug-product manufacturing process should be monitored. *Residual Solvents* ⟨467⟩ is applied to all products where relevant.

In some cases, testing for heavy metal impurities is appropriate. *Heavy Metals* ⟨231⟩ provides the current procedures and criteria.

In addition to the universal tests listed above, the following tests may be considered on a case-by-case basis.

Physicochemical Properties—Examples include *pH* ⟨791⟩, *Viscosity* ⟨911⟩, and *Specific Gravity* ⟨841⟩.

Particle Size—For some dosage forms, particle size can have a significant effect on dissolution rates, bioavailability, therapeutic outcome, and stability. Procedures such as *Aerosols, Nasal Sprays, Metered-Dose Inhalers, and Dry Powder Inhalers* ⟨601⟩ and *Particle Size Distribution Estimation by Analytical Sieving* ⟨786⟩ could be used.

Uniformity of Dosage Units—See discussion of *Dose Uniformity* in the section *General Considerations* above.

Water Content—A test for water content is included when appropriate (see *Water Determination* ⟨921⟩).

Microbial Limits—The type of microbial test(s) and acceptance criteria are based on the nature of the drug substance, method of manufacture, and the route of administration (see *Microbiological Examination of Nonsterile Products: Microbial Enumeration Tests* ⟨61⟩ and *Microbiological Examination of Nonsterile Products: Tests for Specified Microorganisms* ⟨62⟩).

Accessed from 167.78.4.19 by James Cumbie (ocean22) on Mon Sep 09 15:04:23 EDT 2013

Antimicrobial Preservative Content—Acceptance criteria for preservative content in multidose products should be established. They are based on the levels of antimicrobial preservative necessary to maintain the product's microbiological quality at all stages throughout its proposed usage and shelf life (see *Antimicrobial Effectiveness Testing* ⟨51⟩).

Antioxidant Content—If antioxidants are present in the drug product, tests of their content should be performed to maintain the product's quality at all stages throughout its proposed usage and shelf life.

Sterility—Depending on the route of administration—e.g., ophthalmic preparations, implants, aqueous-based preparations for oral inhalation, and solutions for injection—sterility of the product is demonstrated as appropriate (see *Sterility Tests* ⟨71⟩).

Dissolution—A test to measure release of the API(s) from the drug product normally is included for dosage forms such as tablets, capsules, suspensions, granules for suspensions, implants, transdermal delivery systems, and medicated chewing gums. Single-point measurements typically are used for immediate-release dosage forms. For modified-release dosage forms, appropriate test conditions and sampling procedures are established as needed (see *Dissolution* ⟨711⟩ and *Drug Release* ⟨724⟩). In some cases, dissolution testing may be replaced by disintegration testing (see *Disintegration* ⟨701⟩).

Breaking Force and Friability—These parameters are evaluated as in-process controls. Acceptance criteria depend on packaging, supply chain, and intended use (see *Tablet Friability* ⟨1216⟩ and *Tablet Breaking Force* ⟨1217⟩).

Leachables—When evidence exists that leachables from the container–closure systems (e.g., rubber stopper, cap liner, or plastic bottle) have an impact on the safety or efficacy of the drug product, a test is included to evaluate the presence of leachables.

Other Tests—Depending on the type and composition of the dosage form, other tests such as alcohol content, redispersibility, particle size distribution, rheological properties, reconstitution time, endotoxins/pyrogens, particulate matter, functionality testing of delivery systems, delivered dose uniformity, viscosity, and osmolarity may be necessary.

DOSAGE FORMS

Aerosols

Aerosols are preparations packaged under pressure and contain therapeutic agent(s) and a propellant that are released upon actuation of an appropriate valve system. Upon actuation of the valve system, the API is released as a plume of fine particles or droplets. Only one dose is released from the preparation upon actuation of a metered valve. In the case of topical products and depending on the nature of the API and the conditions being treated, actuation of the valve may result in a metered release of a controlled amount of the formulation or the continuous release of the formulation as long as the valve is depressed.

In this chapter, the aerosol dosage form refers only to those products packaged under pressure that release a fine mist of particles or droplets when actuated (see *Glossary*). Other products that produce dispersions of fine droplets or particles will be covered in subsequent sections (e.g., *Inhalation Powders* and *Sprays*).

TYPICAL COMPONENTS

Typical components of aerosols are the formulation containing one or more API(s) and propellant, the container, the valve, and the actuator. Each component plays a role in determining various characteristics of the emitted plume, such as droplet or particle size distribution, uniformity of delivery of the therapeutic agent, delivery rate, and plume velocity and geometry. The metering valve and actuator act in tandem to generate the plume of droplets or particles. The metering valve allows measure of an accurate volume of the liquid formulation under pressure within the container. The actuator directs the metered volume to a small orifice that is open to the atmosphere. Upon actuation, the formulation is forced through the opening, forming the fine mist of particles that are directed to the site of administration.

Aerosol preparations may consist of either a two-phase (gas and liquid) or a three-phase (gas, liquid, and solid or liquid) formulation. The two-phase formulation consists of API(s) dissolved in liquefied propellant. Co-solvents such as alcohol may be added to enhance the solubility of the API(s). Three-phase inhalation and nasal aerosol systems consist of suspended API(s) in propellant(s), co-solvents, and potentially other suitable excipients. The suspension or emulsion of the finely divided API typically is dispersed in the liquid propellant with the aid of suitable biocompatible surfactants or other excipients.

Propellants for aerosol formulations are typically low molecular weight hydrofluorocarbons or hydrocarbons that are liquid when constrained in the container, exhibit a suitable vapor pressure at room temperature, and are biocompatible and nonirritating. Compressed gases do not supply a constant pressure over use and typically are not used as propellants.

Metal containers can withstand the vapor pressure produced by the propellant. Excess formulation may be added to the container to ensure that the full number of labeled doses can be accurately administered. The container and closure must be able to withstand the pressures anticipated under normal use conditions as well as when the system is exposed to elevated temperatures.

TYPES OF AEROSOL DOSAGE FORMS

Aerosol dosage forms can be delivered via various routes. The container, actuator, and metering valve, as well as the formulation, are designed to target the site of administration.

Copyright (c) 2013 The United States Pharmacopeial Convention. All rights reserved.

Inhalation aerosols, commonly known as metered-dose inhalers (MDIs), are intended to produce fine particles or droplets for inhalation through the mouth and deposition in the pulmonary tree. The design of the delivery system is intended to release measured mass and appropriate quality of the active substance with each actuation.

Nasal aerosols, commonly known as nasal MDIs, produce fine particles or droplets for delivery through the nasal vestibule and deposition in the nasal cavity. Each actuation of the valve releases measured mass and appropriate quality of the active substance.

Lingual aerosols are intended to produce fine particles or droplets for deposition on the surface of the tongue. The design of the delivery system releases one dose with each actuation.

Topical aerosols produce fine particles or droplets for application to the skin.

Topical aerosol drug products may be designed, as needed, to deliver a metered amount of formulation upon actuation of the designed valve or continuous release of formulation during depressed status of the valve.

PACKAGING

The accuracy of a system's delivered dose is demonstrated at the range of pressures likely to be encountered as a result of ambient temperature variations or storage in a refrigerator. As an alternative, the system should include clear instructions for use to ensure the container and contents have been equilibrated to room temperature prior to use.

LABELING FOR PROPER USE

Refer to 21 CFR 201.320 and 21 CFR 369.21.

Many experts recommend the addition of a statement indicating that patients and/or consumers should seek advice and instruction from a health care professional about the proper use of the device.

Capsules

Capsules are solid dosage forms in which the API and excipients are enclosed within a soluble container or shell. The shells may be composed of two pieces, a body and a cap, or they may be composed of a single piece. Two-piece capsules are commonly referred to as hard-shell capsules, and one-piece capsules are often referred to as soft-shell capsules. This distinction, although it is imprecise, reflects differing levels of plasticizers in the two compositions and the fact that one-piece capsules typically are more pliable than two-piece capsules.

The shells of capsules usually are made from gelatin. However, they also may be made from cellulose polymers or other suitable material. Most capsules are designed for oral administration. When no deliberate effort has been made to modify the API release rate, capsules are referred to as immediate-release.

Two-Piece or Hard-Shell Capsules—Two-piece capsules consist of two telescoping cap and body pieces in a range of standard sizes.

One-Piece or Soft-Shell Capsules—One-piece capsules typically are used to deliver an API as a solution or suspension. Liquid formulations placed into one-piece capsules may offer advantages by comparison with dry-filled capsules and tablets in achieving content uniformity of potent APIs or acceptable dissolution of APIs with poor aqueous solubility. Because the contact between the shell wall and its liquid contents is more intimate than in dry-filled capsules, undesired interactions may be more likely to occur (including gelatin crosslinking and pellicle formation).

Modified-Release Capsules—The release of APIs from capsules can be modified in several ways. There are two categories of modified-release capsule formulations recognized by the Pharmacopeia:

Delayed-Release Capsules—Capsules sometimes are formulated to include enteric-coated granules to protect acid-labile APIs from the gastric environment or to prevent adverse events such as irritation. Enteric-coated multiparticulate capsule dosage forms may reduce variability in bioavailability associated with gastric emptying times for larger particles (i.e., tablets) and to minimize the likelihood of a therapeutic failure when coating defects occur during manufacturing.

Extended-Release Capsules—Extended-release capsules are formulated in such a manner as to make the contained API available over an extended period of time following ingestion. Expressions such as "prolonged-action", "repeat-action", "controlled-release", and "sustained-release" have also been used to describe such dosage forms. However, the term, extended-release, is used for Pharmacopeial purposes. Requirements for dissolution (see *Dissolution* ⟨711⟩) typically are specified in the individual monograph.

Methods for modifying API release from capsules include coating the filled capsule shells or the contents in the case of dry-filled capsules.

PREPARATION

Two-Piece Capsules—Two-piece gelatin capsules usually are formed from blends of gelatins that have relatively high gel strength in order to optimize shell clarity and toughness or from hypromellose. They also may contain colorants such as D&C and FD&C

Accessed from 167.78.4.19 by James Cumbie (ocean22) on Mon Sep 09 15:04:23 EDT 2013

dyes[3] or various pigments, opaquing agents such as titanium dioxide, dispersing agents, plasticizers, and preservatives. Gelatin capsule shells normally contain between 12% and 16% water.

The shells are manufactured in one set of operations and later filled in a separate manufacturing process. Two-piece shell capsules are made by a process that involves dipping shaped pins into gelatin or hypromellose solutions, followed by drying, cutting, and joining steps.

Powder formulations for two-piece gelatin capsules generally consist of the API and at least one excipient. Both the formulation and the method of filling can affect release of the API. In the filling operation, the body and cap of the shell are separated before filling. Following the filling operation, the machinery rejoins the body and cap and ensures satisfactory closure of the capsule by exerting appropriate force on the two pieces. The joined capsules can be sealed after filling by a band at the joint of the body and cap or by a designed locking joint between the cap and body. In compounding prescription practice, two-piece capsules may be hand-filled. This permits the prescriber the choice of selecting either a single API or a combination of APIs at the exact dose level considered best for an individual patient.

One-Piece Capsules—One-piece shell capsules are formed, filled, and sealed in a single process on the same machine and are available in a wide variety of sizes, shapes, and colors. The most common type of one-piece capsule is that produced by a rotary die process that results in a capsule with a seam. The soft gelatin shell is somewhat thicker than that of two-piece capsules and is plasticized by the addition of polyols such as glycerin, sorbitol, or other suitable material. The ratio of the plasticizer to the gelatin can be varied to change the flexibility of the shell depending on the nature of the fill material, its intended usage, or environmental conditions.

In most cases, one-piece capsules are filled with liquids. Typically, APIs are dissolved or suspended in a liquid vehicle. Classically, an oleaginous vehicle such as a vegetable oil was used. However, nonaqueous, water-miscible liquid vehicles such as the lower molecular weight polyethylene glycols now are more common. The physicochemical properties of the vehicle can be chosen to ensure stability of the API as well as to influence the release profile from the capsule shell.

Inhalation Powders

Inhalation Powders, commonly known as dry powder inhalers (DPIs), consist of a mixture of API(s) and typically the carrier; and all formulation components exist in a finely divided solid state packaged in a suitable container–closure system. The dose is released from the packaging by a mechanism and is mobilized into a fine dispersion upon oral inhalation by the patient.

TYPICAL COMPONENTS

The basic components of the DPI are the formulation consisting of the API(s) and typically the carrier, both in the dry state. The formulation may be packaged in pre-metered or device-metered units. Pre-metered DPIs contain a previously measured amount of formulation in individual units (e.g., capsules, blisters) that are inserted into the device before use. Pre-metered DPIs may also contain pre-metered dose units as ordered multidose assemblies in the delivery system. Pre-metered DPIs include a mechanism designed to pierce the capsule or open the unit-dose container and allow mobilization and aerosolization of the powder by the patient inhaling through the integral mouthpiece. Device-metered DPI(s) have an internal reservoir that contains a sufficient quantity of formulation for multiple doses that are metered by the device during actuation by the patient. To facilitate dosing compliance, device-metered DPIs incorporate a dosing administration information mechanism, such as a dose counter or a dose indicator system.

PACKAGING

For pre-metered DPIs packaged in blister units, the packs must be designed to allow individual unit cavities to be opened without compromising the seal of adjacent cavities. Package components must provide acceptable protection from humidity, light, and/or oxygen as appropriate. The components of the DPI container–closure system typically are made of plastic.

LABELING AND USE

Many experts recommend the addition of a statement indicating that patients and/or consumers should seek advice and instruction from a health care professional about the proper use of the device.

Emulsions (Creams and Lotions)

Creams—Creams are semisolid emulsion dosage forms. They often contain more than 20% water and volatiles and typically contain less than 50% hydrocarbons, waxes, or polyols as the vehicle for the API. Creams generally are intended for external application to the skin or to the mucous membranes. Creams have a relatively soft, spreadable consistency and can be formulated as either a water-in-oil emulsion (e.g., *Cold Cream* or *Fatty Cream* as in the *European Pharmacopoeia*) or as an oil-in-water emulsion

[3] In 1960 Congress enacted the Color Additive Amendments, requiring FDA to regulate dyes, pigments, or other coloring agents in foods, drugs, and cosmetics separately from food additives. Under the law, color additives are deemed unsafe unless they are used in compliance with FDA regulations. The law provides a framework for the listing and certification of color additives. See FDCA section 721; see FDA regulations at 21 CFR Part 70. Colors must also be listed in pertinent FDA regulations for specific uses; the list of color additives for drugs that are exempt from certification is published at 21 CFR Part 73, Subpart B. FDA also conducts a certification program for batches of color additives that are required to be certified before sale; see 21 CFR Part 74 (Subpart B re: drugs). Regulations regarding certification procedures, general specifications, and the listing of certified provisionally listed colors are at 21 CFR Part 80. FDA maintains a color additives website with links to various legal and regulatory resources at: http://www.cfsan.fda.gov/~dms/col-toc.html.

Copyright (c) 2013 The United States Pharmacopeial Convention. All rights reserved.

(e.g., *Betamethasone Valerate Cream*). Creams generally are described as either nonwashable or washable, reflecting the fact that an emulsion with an aqueous external continuous phase is more easily removed than one with a nonaqueous external phase (water-in-oil emulsion). Where the term "cream" is used without qualification, a water-washable product is generally inferred.

Lotions—Lotions are an emulsified liquid dosage form generally intended for external application to the skin. Historically, some topical suspensions such as calamine lotion have been called lotions but that nomenclature is not currently preferred. Lotions share many characteristics with creams. The distinguishing factor is that they are more fluid than semisolid and thus pourable. Due to their fluid character, lotions are more easily applied to large skin surfaces than semisolid preparations. Lotions may contain antimicrobial agents as preservatives.

PREPARATION

Pharmaceutical Compounding—Nonsterile Preparations ⟨795⟩ provides general information regarding the preparation of emulsions.

Creams—Creams may be formulated from a variety of oils, both mineral and vegetable, and from fatty alcohols, fatty acids, and fatty esters. The solid excipients are melted at the time of preparation. Emulsifying agents include nonionic surfactants, detergents, and soaps. Soaps are usually formed from a fatty acid in the oil phase hydrolyzed by a base dissolved in the aqueous phase in situ during the preparation of creams.

Preparation usually involves separating the formula components into two portions: lipid and aqueous. The lipid portion contains all water-insoluble components and the aqueous portion the water-soluble components. Both phases are heated to a temperature above the melting point of the highest melting component. The phases then are mixed and the mixture is stirred until reaching ambient temperature or the mixture has congealed. Mixing generally is continued during the cooling process to promote uniformity. Traditionally, the aqueous phase is added to the lipid phase, but comparable results have been obtained with the reverse procedure. High-shear homogenation may be employed to reduce particle or droplet size and improve the physical stability of the resultant dosage form.

The API(s) can be added to the phase in which it is soluble at the beginning of the manufacturing process, or it can be added after the cream is prepared by a suitable dispersion process such as levigation or milling with a roller mill. Creams usually require the addition of a preservative(s) unless they are compounded immediately prior to use and intended to be consumed in a relatively short period of time.

Lotions—Lotions usually are prepared by dissolving or dispersing the API into the more appropriate phase (oil or water), adding the appropriate emulsifying or suspending agents, and mixing the oil and water phases to form a uniform fluid emulsion.

LABELING AND PACKAGING

Some products may require labeling directions indicating to shake well prior to application and to avoid freezing. Storage limits must be specifically indicated to prevent melting of semisolid components. Instructions to ensure proper dosing and administration must accompany the product. Tight containers are used for preparation and storage to prevent loss by evaporation.

Veterinary Drugs and Drug Products Delivered in Animal Feeds

Medicated articles/feeds are preparations used in veterinary medicine to deliver the API(s) via the water or food given to animals. The medicated article/feed may be either a solid or liquid and sometimes is called a premix. Medicated articles/feeds are further subdivided into three types.

TYPE A MEDICATED ARTICLES

Type A medicated articles consist of a new animal drug(s) with or without a carrier (e.g., calcium carbonate, rice hull, corn, gluten) and with or without inactive ingredients. They are sold to licensed feed mills or producers and are intended to be further diluted by mixing into food or water prior to consumption by the animals. Because these preparations are not actually dosed to animals, they are not considered dosage forms.

TYPE B MEDICATED FEEDS

Type B medicated feeds are products that contain a type A medicated article, or another type B medicated feed, plus a substantial quantity of nutrients (not less than 25% of the total weight). Like type A medicated articles, type B medicated feeds are intended for mixture with food or water and additional nutrients, are not to be fed directly to the animals, and are not considered dosage forms.

TYPE C MEDICATED FEEDS

Type C medicated feeds are made from type A medicated articles or type B medicated feeds and are prepared at concentrations of the API appropriate for administration to animals by mixing in food or water. Administration of type C medicated feeds can be accomplished by blending directly into the feed; top-dressing the preparation onto the animal's normal daily rations; or heating, steaming, and extruding into pellets that are mixed or top-dressed onto the animal's food. Another form of type C medicated feeds is compressed or molded blocks from which animals receive the API or nutrients via licking the block.

Accessed from 167.78.4.19 by James Cumbie (ocean22) on Mon Sep 09 15:04:23 EDT 2013

PREPARATION

Type A medicated articles that are liquids are produced by mixing the API(s) with a suitable solvent (e.g., water or propylene glycol). The API(s) is usually dissolved to produce a solution, but suspension products also could be produced.

Type A medicated articles that are solids are produced by blending the API with excipients to provide a uniform dosage form when mixed with the animal's feed. Often the API is first mixed with an excipient (e.g., starch or sodium aluminosilicate) that has a similar particle size and can help distribute the API uniformly throughout the final drug product. This pre-blend is then mixed with bulking excipients (e.g., calcium carbonate or soybean hulls). Mineral oil may be added to aid uniform distribution, to prevent particle segregation during shipping, and to minimize formation of airborne API particles during production of type B or C medicated feeds.

Type B or C medicated feeds are produced at licensed feed mills or by farm producers. Type A medicated articles are added to the feeds (e.g., ground corn or oats) during the milling process of making feeds. Liquid type A medicated articles often are sprayed in at set rates, and solid type A medicated articles are added slowly to aid in creating uniform distribution in the feeds. Liquid type A medicated articles can also be mixed in with bulk water sources at prescribed amounts.

LABELING AND PACKAGING

Type A medicated articles or type B medicated feeds include special labeling to indicate that they should be used in the manufacture of animal feeds or added to the drinking water. The labels indicate that they are not to be fed directly to animals. Also included is a statement indicating "Not for Human Use". Type A medicated articles or type B medicated feeds are packaged either in paper bags, often with polyethylene liners for solids, and in plastic containers for liquids. Typical sizes are 50-lb bags or several-gallon containers.

Foams

Medicated foams are emulsions containing a dispersed phase of gas bubbles in a liquid continuous phase containing the API. Medicated foams are packaged in pressurized containers or special dispensing devices and are intended for application to the skin or mucous membranes. The medicated foam is formed at the time of application. Surfactants are used to ensure the dispersion of the gas and the two phases. Medicated foams have a fluffy, semisolid consistency and can be formulated to break to a liquid quickly or to remain as foam to ensure prolonged contact.

Medicated foams intended to treat severely injured skin or open wounds must be sterile.

PREPARATION

A foam may contain one or more APIs, surfactants, aqueous or nonaqueous liquids, and the propellants. If the propellant is in the internal (discontinuous) phase (i.e., is of the oil-in-water type), a stable foam is discharged. If the propellant is in the external (continuous) phase (i.e., is of the water-in-oil type), a spray or a quick-breaking foam is discharged. Quick-breaking foams formulated with alcohol create a cooling sensation when applied to the skin and may have disinfectant properties.

LABELING AND USE

Foams formulated with flammable components should be appropriately labeled. Labeling indicates that prior to dispensing, a foam drug product is shaken well to ensure uniformity. The instructions for use must clearly note special precautions that are necessary to preserve sterility. In the absence of a metering valve, delivered volume may be variable.

Medical Gases (Inhalation Materials)

Medical gases are products that are administered directly as a gas. A medical gas has a direct pharmacological action or acts as a diluent for another medical gas. Gases used as excipients for administration of aerosol products, as an adjuvant in packaging, or produced by other dosage forms, are not included in this definition.

Components—Medical gases may be single components or defined mixtures of components. Mixtures also can be extemporaneously prepared at the point of use.

Administration—Medical gases may be administered to the patient using several methods: nasal cannulas, face masks, atmospheric tents, and endotracheal tubes for the pulmonary route; hyperbaric chambers for the pulmonary and dermal routes of administration; jetted tubes that are directed at dental tissue to promote drying in preparation for fillings and crowns; tubes for expanding the intestines to facilitate medical imaging during colonoscopy; tubes for expanding the pelvis via transuterine inflation in preparation for fallopian tubal ligation; and tubes for expanding angioplasty devices. The dose of medical gas typically is metered by a volume rate of flow under ambient temperature and pressure conditions. Administration of a highly compressed gas generally requires a regulator to decrease the pressure, a variable-volume flow controller, and suitable tubing to conduct the gas to the patient. For pulmonary administration, the gas flow will be directed to the nose or mouth by a suitable device or into the trachea through a mechanical ventilator. When medical gases are administered chronically, provision for humidification is common. Care should be exercised to avoid microbial contamination.

Copyright (c) 2013 The United States Pharmacopeial Convention. All rights reserved.

STORAGE

Medical gases are stored in a compressed state in cylinders or other suitable containers. The containers must be constructed of materials that can safely withstand the expected pressure and must be impact resistant. In some cases each container holds a single defined dose (e.g., general anesthetics), but in other cases the container holds sufficient gas for extended administration.

SPECIAL CONSIDERATIONS

The container and system fittings should be appropriate for the medical gas. Adaptors should not be used to connect containers to patient-use supply system piping or equipment. Large quantities of gases such as oxygen or nitrogen can be stored in the liquid state in a cryogenic container and converted into a gas, as needed, by evaporation. Additional rules concerning the construction and use of cryogenic containers are promulgated by governmental agencies (e.g., U.S. Department of Commerce).

Containers, tubing, and administration masks employed for gases containing oxygen are free of any compound that would be sensitive to oxidation or that would be irritating to the respiratory tract.

A significant fraction of the dose of a medical gas may be released into the general vicinity of the patient due to incomplete absorption. Adequate ventilation may be necessary to protect health care workers and others from exposure to the gas (e.g., nitrous oxide).

LABELING

If required under the individual monograph, label to indicate the method of manufacture (such as oxygen via air liquefaction). When piped directly from the storage container to the point of use, the gas must be labeled for content at each outlet.

When oxygen is in use, a posted warning should indicate the necessity of extinguishing smoking materials and avoiding the use of open flames or other potential ignition sources.

Gels

Gels are semisolids consisting either of suspensions of small inorganic particles or of organic molecules interpenetrated by a liquid. Jellies are a type of gel that typically have a higher water content. Gels can be classed either as single-phase or two-phase systems.

A two-phase gel consists of a network of small discrete particles (e.g., *Aluminum Hydroxide Gel* or *Psyllium Hemicellulose*). Gels may be thixotropic, forming semisolids on standing and becoming less viscous on agitation. They should be shaken before use to ensure homogeneity and should be so labeled.

Single-phase gels consist of organic macromolecules uniformly distributed throughout a liquid in such a manner that no apparent boundaries exist between the dispersed macromolecules and the liquid. Single-phase gels may be made from natural or synthetic macromolecules (e.g., *Carbomer*, *Hydroxypropyl Methylcellulose*, or *Starch*) or natural gums (e.g., *Tragacanth*). The latter preparations are also called mucilages. Although these gels commonly are aqueous, alcohols and oils may be used as the continuous phase. For example, mineral oil can be combined with a polyethylene resin to form an oleaginous ointment base.

Gels can be administered by the topical or mucosal routes. Gels containing antibiotics administered by teat infusion can be used in veterinary medicine to treat mastitis.

PREPARATION

See *Pharmaceutical Compounding—Nonsterile Preparations* ⟨795⟩ for general procedures. Also see the information contained under *Suspensions* for the formulation and manufacture of gels containing inorganic components or APIs in the solid phase. See *Pharmaceutical Compounding—Sterile Preparations* ⟨797⟩ for general procedures for the preparation of sterile gels such as *Lidocaine Hydrochloride Jelly*.

Gels formed with large organic molecules may be formed by dispersing the molecule in the continuous phase (e.g., by heating starch), by cross-linking the dispersed molecules by changing the pH (as for *Carbomer Copolymer*), or by reducing the continuous phase (as for jellies formed with sucrose).

Care should be taken to ensure uniformity of the APIs by dispersing them by vigorous mixing or milling or by shaking if the preparation is less viscous.

PACKAGING AND STORAGE

Store in tight containers to prevent water loss. Avoid freezing.

Granules

Granules are solid dosage forms that are composed of agglomerations of smaller particles. These multicomponent compositions are prepared for oral administration and are used to facilitate flexible dosing regimens as granules or as suspensions, address stability challenges, allow taste masking, or facilitate flexibility in administration (for instance, to pediatric patients, geriatric patients, or animals). Granular dosage forms may be formulated for direct oral administration and may facilitate compounding of multiple APIs

Accessed from 167.78.4.19 by James Cumbie (ocean22) on Mon Sep 09 15:04:23 EDT 2013

by allowing compounding pharmacists to blend various granular compositions in the retail or hospital pharmacy. More commonly, granules are reconstituted to a suspension by the addition of water or a supplied liquid diluent immediately prior to delivery to the patient. Effervescent granules are formulated to liberate gas (carbon dioxide) upon addition of water. Common examples of effervescent granules include antacid and potassium supplementation preparations. Common therapeutic classes formulated as granule dosage forms include antibiotics, certain laxatives (such as senna extract products), electrolytes, and various cough and cold remedies that contain multiple APIs.

Granular dosage forms also are employed in veterinary medicine when they are often placed on top of or mixed with an animal's food. They are frequently provided with a measuring device to allow addition to feeds. The resultant mix facilitates dosing.

PREPARATION

Granules often are the precursors used in tablet compression or capsule filling. Although this application represents a pharmaceutical intermediate and not a final dosage form, numerous commercial products are based on granules. In the typical manufacture of granules, the API is blended with excipients (processing aids) and wetted with an appropriate pharmaceutical binding solution, solvent, or blend of solvents to promote agglomeration. This composition is dried and sized to yield the desired material properties.

Frequently, granules are used because the API is unstable in aqueous environments and cannot be exposed to water for periods sufficient to accommodate manufacture, storage, and distribution in a suspension. Preparation of the liquid dosage form from the granules immediately prior to dispensing allows acceptable stability for the duration of use. Granules manufactured for this purpose are packaged in quantities sufficient for a limited time period—usually one course of therapy that typically does not exceed two weeks. In addition to the API, other ingredients may be added to ensure acceptable stability (e.g., buffers, antioxidants, or chelating agents) or to provide color, sweetness, and flavor; and for suspensions, to provide acceptable viscosity to ensure adequate suspension of the particulate to enable uniform dosing.

Effervescent granules typically are formulated from sodium or potassium bicarbonate and an acid such as citric or tartaric acid. To prevent untimely generation of carbon dioxide, manufacturers should take special precautions to limit residual water in the product due to manufacture and to select packaging that protects the product from moisture. The manufacture of effervescent granules can require specialized facilities designed to maintain very low humidity (approximately 10% relative humidity). Effervescent powder mixtures are purposely formed into relatively course granules to reduce the rate of dissolution and provide a more controlled effervescence.

PACKAGING AND STORAGE

Granules for reconstitution may be packaged in unit-of-use containers or in containers with sufficient quantities to accommodate a typical course of therapy (frequently 10 days to two weeks with antibiotic products). Packaging should provide suitable protection from moisture. This is particularly true for effervescent granules. Granules may be stored under controlled room temperature conditions unless other conditions are specifically noted.

Many granule products specify refrigerated storage following reconstitution and direct the patient to discard unused contents after a specified date that is based on the stability of the API in the reconstituted preparation.

LABELING AND USE

Effervescent granules (and tablets) are labeled to indicate that they are not to be swallowed directly.

Reconstitution of granules must ensure complete wetting of all ingredients and sufficient time and agitation to allow the soluble components to dissolve. Specific instructions for reconstitution provided by the manufacturer should be carefully followed.

Reconstituted suspensions should be thoroughly mixed or shaken before use to re-suspend the dispersed particulates. This is especially true of suspension preparations dosed from multiple-dose containers. For particularly viscous suspensions prone to air entrapment, instructions may advise the user how to shake the preparation to re-suspend settled particulates while minimizing air entrapment.

SPECIAL CONSIDERATIONS

For granules reconstituted to form suspensions for oral administration, acceptable suspension of the particulate phase depends on the particle size of the dispersed phase as well as the viscosity of the vehicle. Temperature can influence the viscosity, which influences suspension properties and the ease of removal of the dose from the bottle. In addition, temperature cycling can lead to changes in the particle size of the dispersed phase via Ostwald ripening. Thus, clear instructions should be provided regarding the appropriate storage temperature for the product.

Medicated Gums

Medicated gum is a semisolid confection that is designed to be chewed rather than swallowed. Medicated gums release the API(s) into the saliva. Medicated gums can deliver therapeutic agents for local action in the mouth (such as antibiotics to control gum disease) or for systemic absorption via the buccal or gastrointestinal routes (e.g., nicotine or aspirin). Most medicated gums are manufactured using the conventional melting process derived from the confectionary industry or alternatively may be directly compressed from gum powder. Medicated gums are formulated from insoluble synthetic gum bases such as polyisoprene, polyiso-

Copyright (c) 2013 The United States Pharmacopeial Convention. All rights reserved.

butylene, isobutyleneisoprene copolymer, styrene butadiene rubber, polyvinyl acetate, polyethylene, ester gums, or polyterpenes. Plasticizers and softeners such as propylene glycol, glycerin, oleic acid, or processed vegetable oils are added to keep the gum base pliable and to aid incorporation of the API(s), sweeteners, and flavoring agents. Sugars as well as artificial sweeteners and flavorings are incorporated to improve taste, and dyes may be used to enhance appearance. Some medicated gums are coated with magnesium stearate to reduce tackiness and improve handling during packaging. A preservative may be added.

PREPARATION

Melted Gum—The gum base is melted at a temperature of about 115° until it has the viscosity of thick syrup and at that point is filtered through a fine-mesh screen. This molten gum base is transferred to mixing tanks where the sweeteners, plasticizers, and typically the API are added and mixed. Colorings, flavorings, and preservatives are added and mixed while the melted gum is cooling. The cooled mixture is shaped by extrusion or rolling and cutting. Dosage units of the desired shape and potency are packaged individually. Additional coatings such as powder coatings to reduce tackiness or film or sugar coatings may be added to improve taste or facilitate bulk packaging.

Directly Compressed Gum—The gum base is supplied in a free-flowing granular powder form. The powder gum base is then dry blended with sweeteners, flavors, the API, and lubricant. The blend is then processed through a conventional tablet press and tableted into desired shapes. The resulting medicated gum tablets can be further coated with sugar or sugar-free excipients. These tablets can be packaged in blisters or bottles as needed.

SPECIAL CONSIDERATIONS

Medicated gums are typically dispensed in unit-dose packaging. The patient instructions also may include a caution to avoid excessive heat.

Implants

Implants are long-acting dosage forms that provide continuous release of the API often for periods of months to years. They are administered by the parenteral route. For systemic delivery they may be placed subcutaneously, or for local delivery they can be placed in a specific region in the body.

Several types of implants are available. Pellet implants are small, sterile, solid masses composed of an API with or without excipients. They are usually administered by means of a suitable special injector (e.g., trocar) or by surgical incision. Release of the API from pellets typically is controlled by diffusion and dissolution kinetics. The size of the pellets and rate of erosion will influence the release rate, which typically follows first-order kinetics. API release from pellets for periods of six months or more is possible. Pellet implants have been used to provide extended delivery of hormones such as testosterone or estradiol.

Resorbable microparticles are a type of implants that provide extended release of API over periods varying from a few weeks to months. They can be administered subcutaneously or intramuscularly for systemic delivery, or they may be deposited in a desired location in the body for site-specific delivery. Injectable resorbable microparticles (or microspheres) generally range from 20 to 100 µm in diameter. They are composed of an API dispersed within a biocompatible, bioresorbable polymeric excipient (matrix). Poly(lactide-co-glycolide) polymers have been used frequently. These excipients typically resorb by hydrolysis of ester linkages. The microparticles are administered by suspension in an aqueous vehicle followed by injection with a conventional syringe and needle. Release of the API from the microparticles begins after physiological fluid enters the polymer matrix, dissolving some of the API that then is released by a diffusion-controlled process. Drug release also can occur as the matrix erodes.

Polymer implants can be formed as a single-shaped mass such as a cylinder. The polymer matrix must be biocompatible, but it can be either biodegradable or nonbiodegradable. Shaped polymer implants are administered by means of a suitable special injector. Release kinetics typically are not zero-order, but zero-order kinetics are possible. API release can be controlled by the diffusion of the API from the bulk polymer matrix or by the properties of a rate-limiting polymeric membrane coating. Polymer implants are used to deliver potent small molecules like steroids (e.g., estradiol for cattle) and large molecules like peptides [e.g., luteinizing hormone-releasing hormone (LHRH)]. Example durations of API release are two and three months for biodegradable implants and one year for nonbiodegradable implants. An advantage of biodegradable implants is that they do not require removal after release of all API content. Nonbiodegradable polymer implants can be removed before or after API release is complete or may be left in situ. An implant can have a tab with a hole in it to facilitate suturing it in place, e.g., for an intravitreal implant for local ocular delivery. Such implants may provide therapeutic release for periods as long as 2.5 years.

Some implants are designed to form as a mass in situ. These implants are initially prepared as liquid formulations comprising polymer, API, and solvent for the polymer. The polymer solvent can be water or an organic solvent. After administration of the liquid formulation to a patient by subcutaneous or intramuscular administration, it forms a gel or a solid polymeric matrix that traps the API and extends the API release for days or months. In situ-forming implants also are used for local delivery of the API to treat periodontal disease. The implant is formed within the periodontal pocket.

Another type of implant can be fabricated from a metal such as titanium and plastic components. These implants are administered by means of a suitable injector or by surgical installation. A solution of API inside the implant, like an LHRH solution, is released via an osmotically driven pump inside the implant. Duration of release may be as long as one year or more. Release kinetics are zero order. After the API is delivered, metal-based implants are removed.

API-eluting stents combine the mechanical effect of the stent to maintain arterial patency with the prolonged pharmacologic effect of the incorporated API (to reduce restenosis, inhibit clot formation, or combat infection). As an example, a metal stent can be

Accessed from 167.78.4.19 by James Cumbie (ocean22) on Mon Sep 09 15:04:23 EDT 2013

coated with a nonbiodegradable or biodegradable polymer-containing API. The resultant coating is a polymeric matrix that controls the extended release of the API.

PREPARATION

Pellet implants are made by API compression or molding. Cylindrical polymeric implants typically are made by melt extrusion of a blend of API and polymer, resulting in a rod that is cut into shorter lengths. Polymer implants also can be made by injection molding. Still other implants are assembled from metal tubes and injection-molded plastic components.

Sterility can be achieved by terminal sterilization or by employing aseptic manufacturing procedures.

PACKAGING AND STORAGE

All implants are individually packaged (typically in their injector or for veterinary use in cartridges that are placed in the injector guns), are sterile (except for some animal health products), and conform to the appropriate standards for injection. Biodegradable implants are protected from moisture so the polymer does not hydrolyze and alter drug release kinetics before use.

Inserts

Inserts are solid dosage forms that are inserted into a naturally occurring (nonsurgical) body cavity other than the mouth or rectum (see *Suppositories*). The API is delivered in inserts for local or systemic action. Inserts applied to the eye, such as *Pilocarpine Ocular System*, typically are sterile. Vaginal inserts for humans are usually globular or oviform and weigh about 5 g each. Vaginal inserts for cattle are T-shaped, are formed of polymer, are removable, and can be used for up to eight days. One veterinary application is for estrus synchronization. Inserts intended to dissolve in vaginal secretions usually are made from water-soluble or water-miscible vehicles such as polyethylene glycol or glycerinated gelatin. Vaginal inserts such as dinoprostone vaginal insert (e.g., see USP monograph *Dinoprostone Vaginal Suppositories*) are formulated to deliver medication to the cervix and to be removed or recovered once the API has been released. Intrauterine inserts such as *Progesterone Intrauterine Contraceptive System* are used to deliver APIs locally to achieve efficacy while reducing side effects. Some intrauterine inserts are formulated to remain in the uterus for extended periods of time. An intra-urethral insert of alprostadil is available for the treatment of erectile dysfunction.

PREPARATION

For general considerations see *Pharmaceutical Compounding—Nonsterile Preparations ⟨795⟩*. Inserts vary considerably in their preparation. Inserts may be molded (using technology similar to that used to prepare lozenges, suppositories, or plastics), compressed from powders (as in tableting), or formulated as special applications of capsules (soft gelatin capsules and hard gelatin capsules have been employed for extemporaneously compounded preparations). Inserts may be formulated to melt at body temperature or disintegrate upon insertion. Design of the dosage form should take into consideration the fluid volume available at the insertion site and minimize the potential to cause local irritation. Most inserts are formulated to ensure retention at the site of administration.

STORAGE AND LABELING

Appropriate storage conditions must be clearly indicated in the labeling for all inserts, especially for those that are designed to melt at body temperature. Instructions to ensure proper dosing and administration must accompany the product.

Liquids

As a dosage form a liquid consists of a pure chemical in its liquid state. Examples include mineral oil, isoflurane, and ether. This dosage form term is not applied to solutions.

STORAGE AND LABELING

Storage, packaging, and labeling consider the physical properties of the material and are designed to maintain potency and purity.

Lotions

(See *Emulsions*.)

Lozenges

Lozenges are solid oral dosage forms that are designed to dissolve or disintegrate slowly in the mouth. They contain one or more APIs that are slowly liberated from the flavored and sweetened base. They are frequently intended to provide local action in the oral cavity or the throat but also include those intended for systemic absorption after dissolution. The typical therapeutic categories of APIs delivered in lozenges are antiseptics, analgesics, decongestants, antitussives, and antibiotics. Molded lozenges are called cough

Copyright (c) 2013 The United States Pharmacopeial Convention. All rights reserved.

drops or pastilles. Lozenges prepared by compression or by stamping or cutting from a uniform bed of paste sometimes are known as troches. Troches are often produced in a circular shape.

Lozenges can be made using sugars such as sucrose and dextrose or can provide the benefits of a sugar-free formulation that is usually based on sorbitol or mannitol. Polyethylene glycols and hypromellose sometimes are included to slow the rate of dissolution.

MANUFACTURE

Excipients used in molded lozenge manufacture include gelatin, fused sucrose, sorbitol, or another carbohydrate base.

Molded lozenges using a sucrose or sorbitol base containing APIs such as phenol, dextromethorphan, fentanyl, and dyclonine hydrochloride and menthol are prepared by cooking the sugar (sucrose, corn syrup, and sorbitol) and water at about 150° to reduce the water content to less than 2%. The molten sugar solution is transferred to a cooling belt or cooling table, and medicaments, flavorings, and colorings are added and thoroughly mixed while cooling. Individual dosage units of the desired shape are formed by filling the molten mass into molds. These lozenges are quickly cooled in the molds to trap the base in the glassy state. Once formed, the lozenges are removed from the molds and packaged. Care is taken to avoid excessive moisture during storage to prevent crystallization of the sugar base.

Compressed lozenges are made using excipients that may include a filler, binder, sweetening agent, flavoring agent, and lubricant. Sugars such as sucrose, sorbitol, and mannitol often are included because they can act as filler and binder as well as serve as sweetening agents. Approved FD&C and D&C dyes or lakes (dyes adsorbed onto insoluble aluminum hydroxide) also may be present.

The manufacturing of compressed lozenges is essentially the same as that for conventional tableting, with the exception that a tablet press capable of making larger tablets and exerting greater force to produce harder tablets may be required (see *Tablets*).

The paste used to produce lozenges manufactured by stamping or cutting contains a moistening agent, sucrose, and flavoring and sweetening agents. The homogenous paste is spread as a bed of uniform thickness, and the lozenges are cut or stamped from the bed and are allowed to dry. Some lozenges are prepared by forcing dampened powders under low pressure into mold cavities and then ejecting them onto suitable trays for drying at moderate temperatures.

PACKAGING AND STORAGE

Many lozenges are sensitive to moisture, and typically a monograph indicates that the package or container type is well closed and/or moisture resistant. Storage instructions may include protection from high humidity.

Ointments

Ointments are semisolid preparations intended for external application to the skin or mucous membranes. APIs delivered in ointments are intended for local action or for systemic absorption. Ointments usually contain less than 20% water and volatiles and more than 50% hydrocarbons, waxes, or polyols as the vehicle. Ointment bases recognized for use as vehicles fall into four general classes: hydrocarbon bases, absorption bases, water-removable bases, and water-soluble bases.

Hydrocarbon Bases—Also known as oleaginous ointment bases, they allow the incorporation of only small amounts of an aqueous component. Ointments prepared from hydrocarbon bases act as occlusive dressings and provide prolonged contact of the API with the skin. They are difficult to remove and do not change physical characteristics upon aging.

Absorption Bases—Allow the incorporation of aqueous solutions. Such bases include only anhydrous components (e.g., *Hydrophilic Petrolatum*) or water-in-oil emulsions (e.g., *Lanolin*). Absorption bases are also useful as emollients.

Water-Removable Bases—Oil-in-water emulsions (e.g., *Hydrophilic Ointment*) are sometimes referred to as creams (see *Emulsions*). They may be readily washed from the skin or clothing with water, making them acceptable for cosmetic reasons. Other advantages of the water-removable bases are that they can be diluted with water and that they favor the absorption of serous discharges in dermatological conditions.

Water-Soluble Bases—Also known as greaseless ointment bases, they are formulated entirely from water-soluble constituents. *Polyethylene Glycol Ointment* is the only official preparation in this group. They offer many of the advantages of the water-removable bases and, in addition, contain no water-insoluble substances such as petrolatum, anhydrous lanolin, or waxes. They are more correctly categorized as gels (see *Gels*).

The choice of an ointment base depends on the action desired, the characteristics of the incorporated API, and the latter's bioavailability if systemic action is desired. The product's stability may require the use of a base that is less than ideal in meeting other quality attributes. APIs that hydrolyze rapidly, for example, are more stable in hydrocarbon bases than in bases that contain water.

Ophthalmic ointments are intended for application directly to the eye or eye-associated structures such as the subconjunctival sac. They are manufactured from sterilized ingredients under aseptic conditions and meet the requirements under *Sterility Tests* ⟨71⟩. Ingredients meeting the requirements described under *Sterility Tests* ⟨71⟩ are used if they are not suitable for sterilization procedures. Ophthalmic ointments in multiple-dose containers contain suitable antimicrobial agents to control microorganisms that might be introduced during use unless otherwise directed in the individual monograph or unless the formula itself is bacteriostatic (see *Ophthalmic Ointments* ⟨771⟩, *Added Substances*). The finished ointment is free from large particles and must meet the requirements for *Leakage* and for *Metal Particles* under *Ophthalmic Ointments* ⟨771⟩. The immediate container for ophthalmic ointments is sterile at the time of filling and closing. The immediate containers for ophthalmic ointments are sealed and made tamper-proof so that sterility is ensured at time of first use.

Accessed from 167.78.4.19 by James Cumbie (ocean22) on Mon Sep 09 15:04:23 EDT 2013

A suitable ophthalmic ointment base is nonirritating to the eye and permits diffusion of the API throughout the secretions bathing the eye. Petrolatum is most commonly used as a base for ophthalmic APIs. Some absorption bases, water-removable bases, and water-soluble bases may be desirable for water-soluble APIs if the bases are nonirritating.

MANUFACTURE

Ointments typically are prepared by either direct incorporation into a previously prepared ointment base or by fusion (heating during the preparation of the ointment). A levigating agent is often added to facilitate the incorporation of the medicament into the ointment base by the direct incorporation procedure. In the fusion method, the ingredients are heated, often in the range of 60° to 80°. Homogenization is often necessary. The rate of cooling is an important manufacturing detail because rapid cooling can impart increased structure to the product of the fusion method.

PACKAGING AND STORAGE

Protect from moisture. For emulsified systems, temperature extremes can lead to physical instability of the preparation. When this is the case products should be clearly labeled to specify appropriate storage conditions. Ointments typically are packaged either in ointment jars or ointment tubes. Ointment jars are often used for more viscous ointments that do not require sterility. Ointment tubes typically are used for less viscous ointments and those such as ophthalmic ointments that require the maintenance of sterility. The package sizes for ophthalmic preparations are controlled to minimize the likelihood of contamination and loss of sterility.

Pastes

Pastes are semisolid preparations of stiff consistency and contain a high percentage of finely dispersed solids. Pastes are intended for application to the skin, oral cavity, or mucous membranes. In veterinary practice, pastes are used for systemic delivery of APIs.

Pastes ordinarily do not flow at body temperature and thus can serve as occlusive, protective coatings. As a consequence, pastes are more often used for protective action than are ointments.

Fatty pastes that have a high proportion of hydrophilic solids appear less greasy and more absorptive than ointments. They are used to absorb serous secretions and are often preferred for acute lesions that have a tendency toward crusting, vesiculation, or oozing.

Dental pastes may be applied to the teeth, or alternatively they may be indicated for adhesion to the mucous membrane for a local effect (e.g., *Triamcinolone Acetonide Dental Paste*). Some paste preparations intended for animals are administered orally. The paste is squeezed into the mouth of the animal, generally at the back of the tongue, or is spread inside the mouth.

PREPARATION

Pastes can be prepared by direct incorporation or by fusion (the use of heat to soften the base). The solid ingredients often are incorporated following comminution and sieving. If a levigating agent is needed, a portion of the ointment base is often employed rather than a liquid.

LABELING AND STORAGE

Veterinary products should be labeled to ensure they are not administered to humans. Labeling should indicate the need for protection from heat.

Transdermal Systems (Patches)

Transdermal API delivery systems (TDSs) are discrete dosage forms that are designed to deliver the API(s) through intact skin to the systemic circulation. Typically, a TDS is composed of an outer covering (barrier), an API reservoir (possibly covered with a rate-controlling membrane), a contact adhesive applied to some or all parts of the system (to attach the TDS to the skin surface), and a protective layer that is removed before the patch is applied. The activity of a TDS is defined in terms of the release rate of the API(s) from the system. The total duration of drug release from the system and the system surface area also may be stated.

Most TDSs can be considered either matrix-type or reservoir-type systems. Matrix-type patches are often further divided into monolithic adhesive matrix or polymer matrix types. Reservoir-type systems include liquid reservoir systems and solid-state reservoir systems. Solid-state reservoir patches also include multilaminate adhesive and multilaminate polymer matrix systems.

Drug delivery from some TDSs is controlled by diffusion kinetics. The API diffuses from the drug reservoir directly or through the rate-controlling membrane and/or contact adhesive and then through the skin into the general circulation. Modified-release systems are generally designed to provide drug delivery at a constant rate so that a true steady-state blood concentration is achieved and maintained until the system is removed. Other TDSs work by active transport of the API. For example, iontophoretic transdermal delivery uses the electric current between two electrodes to enhance the movement of ionized APIs through the skin.

TDSs are applied to the body areas recommended by the labeling. The API content of the system provides a reservoir that, by design, maintains a constant API concentration at the system–skin interface. The dosing interval of the system is a function of the amount of API in the reservoir and the release rate. Some API concentration may remain in the reservoir at the end of the dosing interval, in particular for diffusion-controlled delivery mechanisms. [NOTE—Where the API is intended for local action, it may be

Copyright (c) 2013 The United States Pharmacopeial Convention. All rights reserved.

embedded in adhesive on a cloth or plastic backing. This type of product is sometimes called a plaster or tape (see *Plasters* and *Tapes*).]

PREPARATION

TDSs require a backing, a means of storing the API for delivery to the skin, an adhesive to attach the system to the skin, and a removable release liner to protect the adhesive, API, and excipients before application. The backing has low moisture- and vapor-transmission rates to support product stability. The adhesive layer may contain the API and permeation enhancers in the case of matrix-type systems or multi-laminate reservoir systems for which a priming dose is desired. Adhesive may be applied to the entire patch release surface or merely to the periphery. Liquid reservoir systems are often formed–filled–sealed between the backing and release-controlling materials. For monolithic adhesive matrix systems, the API and excipients are applied as a solution or suspension either to the backing or the release liner, and the solvent is allowed to evaporate.

PACKAGING AND STORAGE

Storage conditions are clearly specified because extreme temperature excursions can influence the performance of some systems.

LABELING

The labeling should clearly indicate any performance limitations of the system (e.g., influence of application site, hydration state, hair, or other variables).

Pellets

Pellets are dosage forms composed of small, solid particles of uniform shape sometimes called beads. Typically, pellets are nearly spherical but this is not required. Pellets may be administered by the oral (gastrointestinal) or by the injection route (see also *Implants*). Pellet formulations may provide several advantages including physical separation for chemically or physically incompatible materials, extended release of the API, or delayed release to protect an acid-labile API from degradation in the stomach or to protect stomach tissues from irritation. Extended-release pellet formulations may be designed with the API dispersed in a matrix, or the pellet may be coated with an appropriate polymer coating that modifies the drug-release characteristics. Alternatively, the pellet design may combine these two approaches. In the case of delayed-release formulations, the coating polymer is chosen to resist dissolution at the lower pH of the gastric environment but to dissolve in the higher pH intestinal environment. Injected or surgically administered pellet preparations (see *Implants*) are often used to provide continuous therapy for periods of months or years.

Pellet dosage forms may be designed as single or multiple entities. Often implanted pellets will contain the desired API content in one or several units. In veterinary practice, multiple pellets may be implanted in the ears of cattle, depending on animal size. Oral pellets typically are contained within hard gelatin capsules for administration. Although there are no absolute requirements for size, the useful size range of pellets is governed by the practical constraints of the volume of commonly used capsules and the need to include sufficient numbers of pellets in each dose to ensure uniform dosing of the API. As a result, many pellets used for oral administration fall within a size range of 710 µm to 2.36 mm. Pellet formulations sometimes are used to minimize variability associated with larger dosage forms caused by gastric retention upon stomach emptying.

Enteric-coated (delayed-release) pellet formulations and some extended-release formulations are prepared by applying a coating to the formulated particles. The coating must be applied as a continuous film over the entire surface of each particle. Because a small population of imperfectly coated particles may be unavoidable, oral pellets are designed to require the administration of a large number in a single dose to minimize any adverse influence of imperfectly coated pellets on drug delivery.

PREPARATION

The desired performance characteristics determine the manufacturing method chosen. In general, pellet dosage forms are manufactured by wet extrusion processes followed by spheronization, by wet or dry coating processes, or by compression. Manufacture of pellets by wet coating usually involves the application of successive coatings upon nonpareil seeds. This manufacturing process frequently is conducted in fluid-bed processing equipment. Dry powder coating or layering processes often are performed in specialized rotor granulation equipment. The extent of particle growth achievable in wet coating processes is generally more limited than the growth that can be obtained with dry powder layering techniques, but either method allows the formulator to develop and apply multiple layers of coatings to achieve the desired release profile. The manufacture of pellets by compression is largely restricted to the production of material for subcutaneous implantation. This method of manufacture provides the necessary control to ensure dose uniformity and generally is better suited to aseptic processing requirements.

Alternatively, microencapsulation techniques can be used to manufacture pellets. Coacervation coating techniques typically produce coated particles that are much smaller than those made by other techniques.

PACKAGING AND STORAGE

Pellets for oral administration generally are filled into hard gelatin capsules and are placed in bottles or blister packages. The packaging provides suitable protection from moisture to ensure the stability of the pellet formulation as well as to preserve desirable

Accessed from 167.78.4.19 by James Cumbie (ocean22) on Mon Sep 09 15:04:23 EDT 2013

moisture content of the capsule shells. Pellets for implantation are sterile and should be packaged in tight containers suitable for maintaining sterile contents. Pellets may be stored under controlled room temperature conditions unless other conditions are specifically noted.

LABELING AND USE

Pellets for oral administration that are formulated to provide delayed or extended release must be swallowed intact to ensure preservation of the desired release characteristics. These products should be labeled accordingly to ensure that the material is not crushed or chewed during administration.

Pills

Pills are API-containing small, round solid bodies intended for oral administration. At one time pills were the most extensively used oral dosage form, but they have been replaced by compressed tablets and capsules. Pills are distinguished from tablets because pills are usually prepared by a wet massing and molding technique, while tablets are typically formed by compression.

PREPARATION

Excipients are selected on the basis of their ability to produce a mass that is firm and plastic. The API is triturated with powdered excipients in serial dilutions to attain a uniform mixture. Liquid excipients that act to bind and provide plasticity to the mass are subsequently added to the dry materials. The mass is formed by kneading. The properties of firmness and plasticity are necessary to permit the mass to be worked and retain the shape produced. Cylindrical pill pipes are produced from portions of the mass. The pill pipe is cut into individual lengths corresponding to the intended pill size, and the pills are rolled to form the final shape. Pill-making machines can automate the preparation of the mass, production of pill piping, and the cutting and rolling of pills.

PACKAGING AND LABELING

Labeling and use instructions for pills are similar to those for tablets. Although many pills are resistant to breakage, some pills are friable. Appropriate handling guidelines should be provided in such cases in order to avoid breakage.

Plasters

A plaster is a semisolid substance for external application and usually is supplied on a support material. Plasters are applied for prolonged periods to provide protection, support, or occlusion (maceration).

Plasters consist of an adhesive layer that may contain active substances. This layer is spread uniformly on an appropriate support that is usually made of a rubber base or synthetic resin. Unmedicated plasters are designed to provide protection or mechanical support to the site of application. These plasters are neither irritating nor sensitizing to the skin.

Plasters are available in a range of sizes or cut to size to effectively provide prolonged contact to the site of application. They adhere firmly to the skin but can be peeled off the skin without causing injury.

One example of a plaster currently in use is salicylic acid plasters used for the removal of corns by the keratolytic action of salicylic acid.

PACKAGING AND STORAGE

Plasters are preserved in well-closed containers, preferably at controlled room temperature.

Powders

Powders are defined as a solid or a mixture of solids in a finely divided state intended for internal or external use. Powders used as pharmaceutical dosage forms may contain one or more APIs and can be mixed with water for oral administration or injection. Often pediatric antibiotics utilize a powder dosage form for improved stability. In some areas medicated powders are used for extemporaneous compounding of preparations for simultaneous administration of multiple APIs. Medicated powders also can be inhaled for pulmonary administration (see *Inhalation Powders*). Aerosolized powders for the lungs typically contain processing aids to improve flow and ensure uniformity (see *Aerosols, Nasal Sprays, Metered-Dose Inhalers, and Dry Powder Inhalers* ⟨601⟩). Powders can also be used topically as a dusting powder.

Externally applied powders should have a particle size of 150 µm or less (typically in the 50- to 100-µm range) in order to prevent a gritty feel on the skin that could further irritate traumatized skin. Powders are grouped according to the following terms: very coarse, coarse, moderately coarse, fine, and very fine (see *Powder Fineness* ⟨811⟩). The performance of powder dosage forms can be affected by the physical characteristics of the powder. Particle size can influence the dissolution rate of the particles and affect bioavailability. For dispersed delivery systems, particle size can influence the mixing and segregation behavior of the particle, which in turn affects the uniformity of the dosage form.

Copyright (c) 2013 The United States Pharmacopeial Convention. All rights reserved.

PREPARATION

Powder dosage forms can be produced by the combination of multiple components into a uniform blend. This can also involve particle size reduction, a process referred to as comminution. Mills and pulverizers are used to reduce the particle size of powders when necessary. As the particle size is decreased, the number of particles and the surface area increase, which can increase the dissolution rate and bioavailability of the API.

Blending techniques for powders include those used in compounding pharmacy such as spatulation and trituration (see *Pharmaceutical Compounding—Nonsterile Preparations* ⟨795⟩). Industrial processes may employ sifting or tumbling the powders in a rotating container. One of the most common tumble blenders is a V-blender, which is available in a variety of scales suitable for small-scale and large-scale compounding and industrial production.

Powder flow can be influenced by both particle size and shape. Larger particles generally flow more freely than do fine particles. Powder flow is an important attribute that can affect the packaging or dispensing of a medicated powder.

PACKAGING AND STORAGE

Powders for pharmaceutical use can be packaged in multiple- or single-unit containers. Bulk containers have been used for antacid powders and for laxative powders. In these instances the patient dissolves the directed amount in water prior to administration. This type of multiple-unit packaging is acceptable for many APIs but should not be utilized for powders that require exact dosing. Multiple-unit powders for topical application often are packaged in a container with a sifter top.

Potent APIs in a powder dosage form are dispensed in unit-of-use allocations in folded papers, cellophane envelopes, or packets. Powder boxes are often used by the dispensing pharmacist to hold multiple doses of individual folded papers. Hygroscopic powders pose special challenges and typically are dispensed in moisture-resistant packaging.

LABELING

Typical warning statements include:

- External powders must indicate: “External Use Only”.
- Oral powders should indicate: “For Oral Use Only”.

Individual monographs specify the labeling requirements for powder dosage forms that are listed in *USP–NF*. Oral powders for reconstitution prior to dispensing typically have a limited shelf life (for example, two weeks), and the dispensed product should indicate a beyond-use date based on the date of the water addition. Pharmaceutical powders that are compounded indicate a beyond-use date. Compounded preparations typically are intended for immediate use and have short-term storage durations.

Medicated Soaps and Shampoos

Medicated soaps and shampoos are solid or liquid preparations intended for topical application to the skin or scalp followed by subsequent rinsing with water. Soaps and shampoos are emulsions or surface-active compositions that readily form emulsions or foams upon the addition of water followed by rubbing. Incorporation of APIs in soaps and shampoos combines the cleansing/degreasing abilities of the vehicle and facilitates the topical application of the API to affected areas, even large areas, of the body. The surface-active properties of the vehicle facilitate contact of the API with the skin or scalp. Medicated soap and shampoo formulations frequently contain suitable antimicrobial agents to protect against bacteria, yeast, and mold contamination.

PREPARATION

The preparation of medicated soaps and shampoos follows techniques frequently used for the preparation of emulsified systems. To ensure uniformity, the API(s) must be added to the vehicle prior to congealing (in the case of soaps) followed by thorough mixing. If the medication is present as a suspension, the particle size must be controlled to promote uniform distribution of the API and possibly optimize performance. Because soap manufacture frequently involves processing the ingredients at elevated temperature, care must be exercised to avoid excessive degradation of the API during processing.

PACKAGING AND STORAGE

Individual monographs specify the packaging and storage requirements for medicated soaps and shampoos in *USP–NF*.

LABELING AND USE

Medicated soaps and shampoos are clearly labeled to indicate “For External Use Only”. The preparations also clearly advise the patient to discontinue use and consult a physician/veterinarian if skin irritation or inflammation occurs or persists following application.

Accessed from 167.78.4.19 by James Cumbie (ocean22) on Mon Sep 09 15:04:23 EDT 2013

Solutions

A solution is a preparation that contains one or more dissolved chemical substances in a suitable solvent or mixture of mutually miscible solvents. Because molecules of an API in solution are uniformly dispersed, the use of solutions as dosage forms generally provides assurance of uniform dosage upon administration and good accuracy when the solution is diluted or otherwise mixed.

Substances in solutions are more susceptible to chemical instability than they are in the solid state and dose-for-dose generally are heavier and more bulky than solid dosage forms. These factors increase the cost of packaging and shipping relative to that of solid dosage forms. Solution dosage forms can be administered by injection; inhalation; and the mucosal, topical/dermal, and gastrointestinal routes. Terminology for solutions in veterinary practice includes spot-ons or pour-ons that refer to solutions that are applied to an animal's skin for systemic absorption, dips that refer to solutions that are used for washing and disinfection (e.g., udders, eggs, and whole animals), and drenches that include solutions that are orally administered to livestock, usually with a dosing device. Solutions administered by injection are officially titled injections (see *Injections* ⟨1⟩).

Solutions intended for oral administration usually contain flavorings and colorants to make the medication more attractive and palatable for the patient or consumer. When needed, they also may contain stabilizers to maintain chemical and physical stability and preservatives to prevent microbial growth.

STORAGE AND USE

Light-resistant containers should be considered when photolytic chemical degradation is a potential issue. To prevent water or solvent loss, solutions are stored in tight containers. Instructions to ensure proper dosing and administration must accompany the product.

Sprays

Spray preparations may deliver either accurately metered or nonmetered amounts of formulation.

By definition and in accordance with the USP drug product monographs, a spray dosage form drug product delivers an accurately metered spray through the delivery system, i.e., device. A spray drug product is a preparation that contains an API(s) in either solution or suspension form, typically in presence of excipients for nasal sprays, and that is intended for administration using a predefined metered amount of formulation as a fine mist of aqueous droplets.

Alternatively, nonmetered spray drug products can be generated by package designs that do not accurately control the volume of formulation delivered. These preparations release the formulation as a fine mist of droplets upon physical manipulation of the package by the patient. This generally involves squeezing the sides of the container and expelling the formulation through the nozzle of the container.

Depending on the design of the formulation and the valve system, the droplets generated may be intended for immediate inhalation through the mouth and deposition in the pulmonary tree or for inhalation into the nose and deposition in the nasal cavity.

The mechanism for droplet generation and the intended use of the preparation distinguish various classes of sprays. A spray may be composed of a pump, container, actuator, valve, nozzle or mouthpiece in addition to the formulation containing the drug(s), solvent(s), and any excipient(s). The design of each component plays a role for the appropriate performance of the drug product and in determining the critical characteristics of the droplet size distribution. Droplet and particle size distributions, delivered dose uniformity, plume geometry, and droplet velocity are critical parameters that influence the efficiency of drug delivery. When the preparation is supplied as a multidose container, the addition of a suitable antimicrobial preservative may be necessary. Spray formulations intended for nasal or pulmonary administration have an aqueous base and are usually isotonic and may contain excipients to control pH and viscosity. Pulmonary spray preparations typically are solutions. Nasal spray preparations may be solutions, or suspensions intended for local or systemic effect. Nasal delivery may be used for APIs with high hepatic extraction ratios.

PACKAGING

Containers typically are made of a plastic, but metal or glass may be suitable.

The nasal spray pump is designed to allow convenient one-handed operation. The nasal spray nozzle is designed so that it fits comfortably into the vestibule of the nasal cavity and allows the plume to be directed toward the appropriate region of the cavity.

LABELING AND USE

Refer to CDER *Guidance for Industry: Nasal Spray and Inhalation Solution, Suspension, and Spray Drug Products—Chemistry, Manufacturing, and Controls Documentation*.

Many experts recommend the addition of a statement that patients should seek advice and instruction from a health care professional about the proper use of the device. Guidance should be provided about the proper care and cleaning of the device to prevent introduction of microbes into the pulmonary airways.

Copyright (c) 2013 The United States Pharmacopeial Convention. All rights reserved.

Suppositories

Suppositories are dosage forms adapted for application into the rectum. They usually melt, soften, or dissolve at body temperature. A suppository may have a local protectant or palliative effect or may deliver an API for systemic or local action.

Suppository bases typically include cocoa butter, glycerinated gelatin, hydrogenated vegetable oils, mixtures of polyethylene glycols of various molecular weights, and fatty acid esters of polyethylene glycol. The suppository base can have a notable influence on the release of the API(s). Although cocoa butter melts quickly at body temperature, it is immiscible with body fluids and this inhibits the diffusion of fat-soluble APIs to the affected sites. Polyethylene glycol is a suitable base for some antiseptics. In cases when systemic action is desired, incorporating the ionized rather than the nonionized form of the API may help maximize bioavailability. Although nonionized APIs partition more readily out of water-miscible bases such as glycerinated gelatin and polyethylene glycol, the bases themselves tend to dissolve very slowly, which slows API release. Cocoa butter and its substitutes (e.g., *Hard Fat*) perform better than other bases for allaying irritation in preparations intended for treating internal hemorrhoids. Suppositories for adults are tapered at one or both ends and usually weigh about 2 g each.

PREPARATION

Cocoa butter suppositories have cocoa butter as the base and can be made by incorporating the finely divided API into the solid oil at room temperature and suitably shaping the resulting mass or by working with the oil in the melted state and allowing the resulting suspension to cool in molds. A suitable quantity of hardening agents may be added to counteract the tendency of some APIs (such as chloral hydrate and phenol) to soften the base. The finished suppository melts at body temperature.

A variety of vegetable oils, such as coconut or palm kernel, modified by esterification, hydrogenation, or fractionation, are used as cocoa butter substitutes to obtain products that display varying compositions and melting temperatures (e.g., *Hydrogenated Vegetable Oil* and *Hard Fat*). These products can be designed to reduce rancidity while incorporating desired characteristics such as narrow intervals between melting and solidification temperatures and melting ranges to accommodate formulation and climatic conditions.

APIs can be incorporated into glycerinated gelatin bases by addition of the prescribed quantities to a vehicle consisting of about 70 parts of glycerin, 20 parts of gelatin, and 10 parts of water.

Several combinations of polyethylene glycols that have melting temperatures that are above body temperature are used as suppository bases. Because release from these bases depends on dissolution rather than on melting, there are significantly fewer problems in preparation and storage than is the case for melting-type vehicles. However, high concentrations of higher molecular weight polyethylene glycols may lengthen dissolution time, resulting in problems with retention.

Several nonionic surface-active agents closely related chemically to the polyethylene glycols can be used as suppository vehicles. Examples include polyoxyethylene sorbitan fatty acid esters and the polyoxyethylene stearates. These surfactants are used alone or in combination with other suppository vehicles to yield a wide range of melting temperatures and consistencies. A notable advantage of such vehicles is their water dispersibility. However, care must be taken with the use of surfactants because they may either increase the rate of API absorption or interact with the API to reduce therapeutic activity.

Compounding suppositories using a suppository base typically involves melting the suppository base and dissolution or dispersion of the API in the molten base (see *Pharmaceutical Compounding—Nonsterile Preparations* ⟨795⟩). When compounding suppositories, the manufacturer or compounding professional prepares an excess amount of total formulation to allow the prescribed quantity to be accurately dispensed. In compounding suppositories, avoid caustic or irritating ingredients, carefully select a base that will allow the API to provide the intended effect, and in order to minimize abrasion of the rectal membranes, reduce solid ingredients to the smallest reasonable particle size. A representative number of the compounded suppositories should be weighed to confirm that none is less than 90% or more than 110% of the average weight of all units in the batch.

STORAGE AND USE

Suppositories typically are provided in unit-dose packaging with storage instructions to prevent melting of the suppository base. Suppositories with cocoa butter base require storage in well-closed containers, preferably at a temperature below 30° (controlled room temperature). Glycerinated gelatin suppositories require storage in tight containers, preferably at a temperature below 2°. Although polyethylene glycol suppositories can be stored without refrigeration, they should be packaged in tightly closed containers.

Include instructions about insertion procedures to ensure ease of use and absorption. Labels on polyethylene glycol suppositories should contain directions that they be moistened with water before insertion.

Suspensions

A suspension is a biphasic preparation consisting of solid particles dispersed throughout a liquid phase. Suspension dosage forms may be formulated for specific routes of administration such as oral suspensions, topical suspensions, or suspensions for aerosols (see *Aerosols*). Some suspensions are prepared and ready for use, and others are prepared as solid mixtures intended for reconstitution with an appropriate vehicle just before use. The term "milk" is sometimes used for suspensions in aqueous vehicles intended for oral administration (e.g., *Milk of Magnesia*). The term "magma" is often used to describe suspensions of inorganic solids, such as clays in water, that display a tendency toward strong hydration and aggregation of the solid, giving rise to gel-like consistency and thixotropic rheological behavior (e.g., *Bentonite Magma*). The term "lotion" may refer to a suspension dosage form although the liquid phase in these preparations is commonly an emulsion intended for application to the skin (e.g., *Calamine Topical Suspension*; see *Emulsions*). Some suspensions are prepared in sterile form and are used as injectables (see *Injections* ⟨1⟩). Other sterile suspensions are

Accessed from 167.78.4.19 by James Cumbie (ocean22) on Mon Sep 09 15:04:23 EDT 2013

for ophthalmic or otic administration. Suspensions generally are not injected intravenously, epidurally, or intrathecally unless the product labeling clearly specifies these routes of administration.

Limited aqueous solubility of the API(s) is the most common rationale for developing a suspension. Other potential advantages of a suspension include taste masking and improved patient compliance because of the more convenient dosage form. When compared to solutions, suspensions have improved chemical stability. Ideally, a suspension should contain small uniform particles that are readily suspended and easily redispersed following settling. Unless the dispersed solid is colloidal, the particulate matter in a suspension likely will settle to the bottom of the container upon standing. Such sedimentation may lead to caking and solidification of the sediment and difficulty in redispersing the suspension upon agitation. To prevent such problems, manufacturers commonly add ingredients to increase viscosity and the gel state of the suspension or flocculation, including clays, surfactants, polyols, polymers, or sugars. Frequently, thixotropic vehicles are used to counter particle-settling tendencies, but these vehicles must not interfere with pouring or redispersal. Additionally, the density of the dispersed phase and continuous phase may be modified to further control settling rate. For topical suspensions, rapid drying upon application is desirable.

The product is both chemically and physically stable throughout its shelf life. Temperature can influence the viscosity (and thus suspension properties and the ease of removing the dose from the bottle), and temperature cycling can lead to changes in the particle size of the dispersed phase via Ostwald ripening. When manufacturers conduct stability studies to establish product shelf life and storage conditions, they should cycle conditions (freeze/thaw) to investigate temperature effects.

Unless studies confirm that the formulation will not support microbial growth, suspensions should contain suitable antimicrobial agents to protect against bacterial, yeast, and mold contamination (see *Antimicrobial Effectiveness Testing* ⟨51⟩) or other appropriate measures should be taken to avoid microbial contamination.

Suspensions for reconstitution are dry powder or granular mixtures that require the addition of water or a supplied formulated diluent before administration. This formulation approach is frequently used when the chemical or physical stability of the API or suspension does not allow sufficient shelf life for a preformulated suspension. Typically, these suspensions are refrigerated after reconstitution to increase their shelf life. For this type of suspension, the powder blend is uniform and the powder readily disperses when reconstituted. Taste of the reconstituted suspension is also an important attribute because many suspensions are used for pediatric populations.

Injectable suspensions generally are intended for either subcutaneous or intramuscular routes of administration and should have a controlled particle size, typically in the range of 5 µm or smaller. The rationale for the development of injectable suspensions includes poor API solubility, improved chemical stability, prolonged duration of action, and avoidance of first-pass metabolism. Care is needed in selecting the sterilization technique because it may affect product stability or alter the physical properties of the material.

PREPARATION

Suspensions are prepared by adding suspending agents or other excipients and purified water or oil to solid APIs and mixing to achieve uniformity. In the preparation of a suspension, the characteristics of both the dispersed phase and the dispersion medium should be considered. During development manufacturers should define an appropriate particle size distribution for the suspended material to minimize the likelihood of particle size changes during storage.

In some instances the dispersed phase has an affinity for the vehicle and is readily wetted upon its addition. For some materials the displacement of air from the solid surface is difficult, and the solid particles may clump together or float on top of the vehicle. In the latter case, a wetting agent is used to facilitate displacement of air from the powder surface. Surfactants, alcohol, glycerin, and other hydrophilic liquids can be used as wetting agents when an aqueous vehicle will be used as the dispersion phase. These agents function by displacing the air in the crevices of the particles and dispersing the particles. In the large-scale preparation of suspensions, wetting of the dispersed phase may be aided by the use of high-energy mixing equipment such as colloid mills or other rotor–stator mixing devices.

After the powder has been wetted, the dispersion medium (containing the soluble formulation components such as colorants, flavorings, and preservatives) is added in portions to the powder, and the mixture is thoroughly blended before subsequent additions of the vehicle. A portion of the vehicle is used to wash the mixing equipment free of suspended material, and this portion is used to bring the suspension to final volume and ensure that the suspension contains the desired concentration of solid matter. The final product may be passed through a colloid mill or other blender or mixing device to ensure uniformity. When necessary, preservatives are included in the formulation of suspensions to protect against bacterial and mold contamination.

Suspensions are shaken before the dose is dispensed. Because of the viscosity of many suspension vehicles, air entrainment may occur during dosing. The formulation process allows evaluation of this possibility; adjustments in vehicle viscosity or the incorporation of low levels of antifoaming agents are common approaches to minimize air entrainment. Alternatively, specific instructions for shaking the formulation may be provided to minimize air incorporation and ensure accurate dosing.

PACKAGING AND STORAGE

Individual monographs specify the packaging and storage requirements for suspension products. Typically, the monograph will indicate a container type such as tight, well-closed, or light-resistant and may indicate storage conditions such as controlled room temperature. For additional information about meeting packaging requirements listed in the individual monographs, refer to *Containers—Glass* ⟨660⟩, *Containers—Plastic* ⟨661⟩, *Containers—Performance Testing* ⟨671⟩, *Good Packaging Practices* ⟨1177⟩, and the *General Notices* for statements about preservation, packaging, storage, and labeling.

Acceptable suspension of the particulate phase depends on the particle size of the dispersed phase as well as the viscosity and density of the vehicle. Clear instruction is provided regarding the appropriate storage temperature for the product because tempera-

Copyright (c) 2013 The United States Pharmacopeial Convention. All rights reserved.

ture can influence the viscosity and density (that affect suspension properties and the ease of removal of the dose from the bottle), and temperature cycling can lead to changes in particle size of the dispersed phase. Suspensions require storage in tight containers. Avoid freezing.

LABELING AND USE

Instructions to ensure proper dosing and administration must accompany the product. When labeling a suspension, consider any air that might be entrained in the preparation as a result of shaking, and avoid such entrainment. Compounded suspensions should indicate a beyond-use date that is calculated from the time of compounding. Suspensions are shaken well before use to ensure uniform distribution of the solid in the vehicles.

Tablets

Tablets are solid dosage forms in which the API is blended with excipients and compressed into the final dosage. Tablets are the most widely used dosage form in the U.S. Tablet presses use steel punches and dies to prepare compacted tablets by the application of high pressures to powder blends or granulations. Tablets can be produced in a wide variety of sizes, shapes, and surface markings. Capsule-shaped tablets are commonly referred to as caplets. Specialized tablet presses may be used to produce tablets with multiple layers or with specially formulated core tablets placed in the interior of the final dosage form. These specialized tablet presentations can delay or extend the release of the API(s) or physically separate incompatible APIs. Tablets may be coated by a variety of techniques to provide taste masking, protection of photo-labile API(s), extended or delayed release, or unique appearance (colors). When no deliberate effort has been made to modify the API release rate, tablets are referred to as immediate-release.

Tablet Triturates—Small, usually cylindrical, molded or compacted tablets. Tablet triturates traditionally were used as dispensing tablets in order to provide a convenient, measured quantity of a potent API for compounding purposes, but they are rarely used today.

Hypodermic Tablets—Molded tablets made from completely and readily water-soluble ingredients; formerly intended for use in making preparations for hypodermic injection. They may be administered orally or sublingually when rapid API availability is required, as in the case of *Nitroglycerin Sublingual Tablets*.

Bolus Tablets—Large, usually elongated, tablets intended for administration to large animals. Conventional tableting processes can be used to manufacture bolus tablets, but due to their size higher compression forces may be necessary.

Buccal Tablets—Intended to be inserted in the buccal pouch, where the API is absorbed directly through the oral mucosa. Few APIs are readily absorbed in this way (examples are nitroglycerin and certain steroid hormones).

Effervescent Tablets—Prepared by compaction and contain, in addition to the API(s), mixtures of acids (e.g., citric acid or tartaric acid) and carbonates and/or hydrogen carbonates. Upon contact with water, these formulations release carbon dioxide, producing the characteristic effervescent action.

Chewable Tablets—Formulated and manufactured to produce a pleasant-tasting residue in the mouth and to facilitate swallowing. Hard chewable tablets are typically prepared by compaction, usually utilizing mannitol, sorbitol, or sucrose as binders and fillers, and contain colors and flavors to enhance their appearance and taste. Soft chewable tablets are typically made by a molding or extrusion process, frequently with more than 10% water to help maintain a pliable, soft product. Hard chewable tablets in veterinary medicine often have flavor enhancers like brewer's yeast or meat/fish-based flavors.

Tablets for human use that include "Chewable" in the title must be chewed or crushed prior to swallowing to ensure reliable release of the API(s) or to facilitate swallowing. If tablets are designed so that they may be chewed (but chewing is not required for API release or ease of swallowing), the title should not include a reference to "chewable". In that case, the product may still be described as "chewable" in the ancillary labeling statement.

Tablets for veterinary use that are intended to be chewed will include "Chewable" in the title. However, it is understood that for veterinary products it is not possible to ensure that tablets are chewed prior to ingestion. Chewable tablets may be broken into pieces and fed to animals that normally swallow treats whole.

Modified-Release Tablets—There are two categories of modified-release tablet formulations recognized by the Pharmacopeia:

Delayed-Release Tablets—Tablets sometimes are formulated with enteric coatings to protect acid-labile APIs from the gastric environment or to prevent adverse events such as irritation.

Extended-Release Tablets—Extended-release tablets are formulated in such a manner as to make the API available over an extended period of time following ingestion. Expressions such as "prolonged-release", "repeat-action", "controlled-release", and "sustained-release" have also been used to describe such dosage forms. However, the term "extended-release" is used for Pharmacopeial purposes. Requirements for dissolution (see *Dissolution* ⟨711⟩) typically are specified in the individual monographs.

Orally Disintegrating Tablets—Orally disintegrating tablets are intended to disintegrate rapidly within the mouth to provide a fine dispersion before the patient swallows the resulting suspension where the API is intended for gastrointestinal delivery and/or absorption. Some of these dosage forms have been formulated to facilitate rapid disintegration and are manufactured by conventional means or by using lyophilization or molding processes. Further details may be found in the CDER *Guidance for Industry: Orally Disintegrating Tablets*.

Sublingual Tablets—Sublingual tablets are intended to be inserted beneath the tongue, where the API is absorbed directly through the oral mucosa. As with buccal tablets, few APIs are extensively absorbed in this way, and much of the API is swallowed and is available for gastrointestinal absorption.

Accessed from 167.78.4.19 by James Cumbie (ocean22) on Mon Sep 09 15:04:23 EDT 2013

PREPARATION

Most compacted (compressed) tablets consist of the API(s) and a number of excipients. These excipients may include fillers (diluents), binders, disintegrating agents, lubricants, and glidants. Approved FD&C and D&C dyes or lakes, flavors, and sweetening agents also may be present.

Fillers or diluents are added when the quantity of API(s) is too small or the properties of the API do not allow satisfactory compaction in the absence of other ingredients. Binders impart adhesiveness to the powder blend and promote tablet formation and maintenance of API uniformity in the tableting mixture. Disintegrating agents facilitate reduction of the tablet into small particles upon contact with water or biological fluids. Lubricants reduce friction during the compaction and ejection cycles. Glidants improve powder fluidity, powder handling properties, and tablet weight control. Colorants are often added to tablet formulations for esthetic value or for product identification.

Tablets are prepared from formulations that have been processed by one of three general methods: wet granulation, dry granulation (roll compaction or slugging), and direct compression.

Wet Granulation involves the mixing of dry powders with a granulating liquid to form a moist granular mass that is dried and sized prior to compression. It is particularly useful in achieving uniform blends of low-dose APIs and facilitating the wetting and dissolution of poorly soluble, hydrophobic APIs.

Dry Granulations can be produced by passing powders between rollers at elevated pressure (roll compaction). Alternatively, dry granulation also can be carried out by the compaction of powders at high pressures on tablet presses, a process also known as slugging. In either case the compacts are sized before compression. Dry granulation improves the flow and handling properties of the powder formulation without involving moisture in the processing.

Direct Compression tablet processing involves dry blending of the API(s) and excipients followed by compression. The simplest manufacturing technique, direct compression is acceptable only when the API and excipients possess acceptable flow and compression properties without prior process steps.

Tablets may be coated to protect the ingredients from air, moisture, or light; to mask unpleasant tastes and odors; to improve tablet appearance; and to reduce dustiness. In addition, coating may be used to protect the API from acidic pH values associated with gastric fluids or to control the rate of drug release in the gastrointestinal tract.

The most common coating in use today is a thin film coating composed of a polymer that is derived from cellulose. Sugar coating is an alternative, less common approach. Sugar-coated tablets have considerably thicker coatings that are primarily sucrose with a number of inorganic diluents. A variety of film-coating polymers are available and enable the development of specialized release profiles. These formulations are used to protect acid-labile APIs from the acidic stomach environment as well as to prolong the release of the API to reduce dosing frequency (see *Dissolution* ⟨711⟩ or *Disintegration* ⟨701⟩).

PACKAGING, STORAGE, AND LABELING

Individual monographs specify the packaging and storage requirements for tablet products. Typically, the monograph will indicate the container type such as tight, well-closed, or light-resistant. For additional information on meeting USP packaging requirements, see *Containers—Glass* ⟨660⟩, *Containers—Plastic* ⟨661⟩, and *Containers—Performance Testing* ⟨671⟩. Effervescent tablets are stored in tightly closed containers or moisture-proof packs and are labeled to indicate that they should not be swallowed directly.

Tapes

A tape is a dosage form suitable for delivering APIs to the skin. It consists of an API(s) impregnated into a durable yet flexible woven fabric or extruded synthetic material that is coated with an adhesive agent. Typically the impregnated API is present in the dry state. The adhesive layer is designed to hold the tape securely in place without the aid of additional bandaging. Unlike transdermal patches, tapes are not designed to control the release rate of the API.

The API content of tapes is expressed as amount per surface area with respect to the tape surface exposed to the skin. The use of an occlusive dressing with the tape enhances the rate and extent of delivery of the API to deeper layers of the skin and may result in greater systemic absorption of the API.

LABELING, STORAGE, AND USE

Label to indicate "External Use Only". Tapes are stored in tight containers protected from light and moisture. To employ the tape, one cuts a patch slightly larger than the area that will be treated. The backing paper is removed from the adhesive side, and the tape is applied to the skin. To ensure optimal adhesion, the tape should not be applied to folds in the skin. To minimize systemic absorption and to ensure good adhesion, tapes should be applied to dry skin.

GLOSSARY

This glossary provides definitions for terms in use in medicine and serves as a source of official names for official articles, except when the definition specifically states that the term is not to be used in article names. Examples of general nomenclature forms for the more frequently encountered categories of dosage forms appear in *Nomenclature* ⟨1121⟩. In an attempt to be comprehensive, this glossary was compiled without the limits imposed by current preferred nomenclature conventions. To clearly identify/distinguish preferred from not preferred terms, entries indicate when a term is not preferred and direct the user to the current preferred term.

Copyright (c) 2013 The United States Pharmacopeial Convention. All rights reserved.

When a term is described as an attribute of a dosage form, it is intended to distinguish the term from those used for actual dosage form titles. While attribute terms are typically not used as the official name for the dosage form, when they are used they identify a specialized presentation of the dosage form. For example, the attribute, chewable, may be used with the dosage form term, tablets, to identify a specific type of tablet that must be chewed prior to swallowing.

Aerosol: A dosage form consisting of a liquid or solid preparation packaged under pressure and intended for administration as a fine mist. The descriptive term aerosol also refers to the fine mist of small droplets or solid particles that are emitted from the product.

Aromatic Water (not preferred; see *Solution*): A clear, saturated, aqueous solution of volatile oils or other aromatic or volatile substances.

Aural (Auricular) (not preferred; see *Otic*): For administration into, or by way of, the ear.

Bead (not preferred; see *Pellets*): A solid dosage form in the shape of a small sphere. In most products a unit dose consists of multiple beads.

Blocks: A large veterinary product intended to be licked by animals and containing the API(s) and nutrients such as salts, vitamins, and minerals.

Bolus (not preferred; see *Tablet*): A large tablet intended for administration to large animals.

Caplet (not preferred; see *Tablet*): Tablet dosage form in the shape of a capsule.

Capsule: A solid dosage form in which the API, with or without other ingredients, is filled into either a hard or soft shell. Most capsule shells are composed mainly of gelatin.

Chewable: Attribute of a solid dosage form that is intended to be chewed or crushed before swallowing.

Coated: Attribute of a solid dosage form that is covered by deposition of an outer solid that is different in composition from the core material.

Collodion (not preferred; see *Solution*): A preparation that is a solution dosage form composed of pyroxilin dissolved in a solvent mixture of alcohol and ether and applied externally.

Collodial Dispersion: An attribute of a preparation or formulation in which particles of colloidal dimension (i.e., typically between 1 nm and 1 μm) are distributed uniformly throughout a liquid.

Concentrate: A liquid or solid preparation of higher concentration and smaller volume than the final dosage form; usually intended to be diluted prior to administration. The term continues to be used for veterinary preparations but is being phased out of *USP–NF* titles for human applications.

Conventional-Release (not preferred; see *Immediate-Release*): Descriptive term for a dosage form in which no deliberate effort has been made to modify the release rate of the API. In the case of capsules and tablets, the inclusion or exclusion of a disintegrating agent is not interpreted as a modification. This term is not used in article names.

Cream: An emulsion dosage form often containing more than 20% water and volatiles and/or containing less than 50% hydrocarbons, waxes, or polyols as the vehicle for the API. Creams are generally intended for external application to the skin or mucous membranes.

Delayed-Release: A type of modified-release dosage form. A descriptive term for a dosage form deliberately modified to delay release of the API for some period of time after initial administration. For example, release of the API is prevented in the gastric environment but promoted in the intestinal environment; this term is synonymous with *Enteric-Coated* or *Gastro-Resistant*.

Dental: Descriptive term for a preparation that is applied to the teeth for localized action.

Dermal: A topical route of administration where the article is intended to reach or be applied to the dermis.

Dosage Form: A formulation that typically contains the API(s) and excipients in quantities and physical form designed to allow the accurate and efficient administration of the API to the human or animal patient. This term is not used in article names.

Dry Powder Inhaler: A device used to administer an inhalation powder in a finely divided state suitable for oral inhalation by the patient. This term is not used in article names.

Effervescent: Attribute of an oral dosage form, frequently tablets or granules, containing ingredients that, when in contact with water, rapidly release carbon dioxide. The dosage form is dissolved or dispersed in water to initiate the effervescence prior to ingestion.

Elixir (not preferred; see *Solution*): A preparation that typically is a clear, flavored, sweetened hydroalcoholic solution intended for oral use. The term should not be used for new articles in *USP–NF* but is commonly encountered in compounding pharmacy practice.

Emollient: Attribute of a cream or ointment indicating an increase in the moisture content of the skin following application of bland, fatty, or oleaginous substances. This term should not be used in article names.

Emulsion: A dosage form consisting of a two-phase system composed of at least two immiscible liquids, one of which is dispersed as droplets (internal or dispersed phase) within the other liquid (external or continuous phase), generally stabilized with one or more emulsifying agents. Emulsion is not used as a dosage form term if a more specific term is applicable (e.g., *Cream*, *Lotion*, or *Ointment*).

Enteric-Coated (not preferred; see *Delayed-Release*): Descriptive term for a solid dosage form in which a polymer coating has been applied to prevent the release of the API in the gastric environment.

Excipient: An ingredient of a dosage form other than an API. This term is not used in article names. The term, excipient, is synonymous with inactive ingredient.

Extended-Release: Descriptive term for a dosage form that is deliberately modified to protract the release rate of the API compared to that observed for an immediate-release dosage form. The term is synonymous with prolonged- or sustained-release. Many extended-release dosage forms have a pattern of release that begins with a "burst effect" that mimics an immediate release followed by a slower release of the remaining API in the dosage form.

Film: A term used to describe a thin, flexible sheet of material, usually composed of a polymer. Films are used in various routes of administration including as a means of oral administration of material in a rapidly dissolving form. The term, film, also may be used as an attribute when applied to solid oral dosage forms for taste masking, product identification, and aesthetic purposes.

Foam: An emulsion dosage form containing dispersed gas bubbles. When dispensed it has a fluffy, semisolid consistency.

Accessed from 167.78.4.19 by James Cumbie (ocean22) on Mon Sep 09 15:04:23 EDT 2013

Gas: One of the states of matter having no definite shape or volume and occupying the entire container when confined.
Gastro-Resistant (not preferred; see *Delayed-Release*): Descriptive term for a solid dosage form in which a polymer coating has been applied to prevent the release in the gastric environment.
Gel: A dosage form that is a semisolid dispersion of small inorganic particles or a solution of large organic molecules containing a gelling agent to provide stiffness. A gel may contain suspended particles.
Granules: A dosage form composed of dry aggregates of powder particles that may contain one or more APIs, with or without other ingredients. They may be swallowed as such, dispersed in food, or dissolved in water. Granules are frequently compacted into tablets or filled into capsules, with or without additional ingredients.
Gum: A dosage form in which the base consists of a pliable material that, when chewed, releases the API into the oral cavity.
Hard-Shell Capsule (not preferred; see *Capsules*): A type of capsule in which one or more APIs, with or without other ingredients, are filled into a two-piece shell. Most hard-shell capsules are composed mainly of gelatin and are fabricated prior to the filling operation.
Immediate-Release: Descriptive term for a dosage form in which no deliberate effort has been made to modify the API release rate. In the case of capsules and tablets, the inclusion or exclusion of a disintegrating agent is not interpreted as a modification. This term is not used in article names.
Implant: A dosage form that is a solid or semisolid material containing the API that is inserted into the body. The insertion process is invasive, and the material is intended to reside at the site for a period consistent with the design release kinetics or profile of the API(s).
Inhalation (by inhalation): A route of administration for aerosols characterized by dispersion of the API into the airways during inspiration.
By Injection: A route of administration of a liquid or semisolid deposited into a body cavity, fluid, or tissue by use of a needle.
Insert: A solid dosage form that is inserted into a naturally occurring (nonsurgical) body cavity other than the mouth or rectum. It should be noted that a suppository is intended for application into the rectum and is not classified as an insert (see *Suppository*).
Intraocular: A route of administration to deliver a sterile preparation within the eye.
Irrigation: A sterile solution or liquid intended to bathe or flush open wounds or body cavities.
Jelly (not preferred; see *Gel*): A semisolid dispersion of small inorganic particles or a solution of large organic molecules containing a gelling agent to promote stiffness.
Liquid: A dosage form consisting of a pure chemical in its liquid state. This dosage form term should not be applied to solutions. The term is not used in article names. When liquid is used as a descriptive term, it indicates a material that is pourable and conforms to its container at room temperature.
Lotion: An emulsion liquid dosage form applied to the outer surface of the body. Historically, this term has also been applied to suspensions and solutions.
Lozenge: A solid dosage form intended to disintegrate or dissolve slowly in the mouth.
Modified-Release: A descriptive term for a dosage form with an API release pattern that has been deliberately changed from that observed for the immediate-release dosage form of the same API. This term is not used in article names.
Molded Tablet: A tablet that has been formed by dampening the ingredients and pressing into a mold, then removing and drying the resulting solid mass. This term is not used in article names.
Mouthwash (not preferred; see *Solution*): Term applied to a solution preparation used to rinse the oral cavity.
Nasal: Route of administration (mucosal) characterized by deposition in the nasal cavity for local or systemic effect.
Ocular (not preferred; see *Intraocular*): Route of administration indicating deposition of the API within the eye.
Ointment: A semisolid dosage form, usually containing less than 20% water and volatiles and more than 50% hydrocarbons, waxes, or polyols as the vehicle. This dosage form generally is for external application to the skin or mucous membranes.
Ophthalmic: A route of administration characterized by application of a sterile preparation to the external parts of the eye.
Orally Disintegrating: A descriptive term for a solid oral dosage form that disintegrates rapidly in the mouth prior to swallowing. The API is intended for gastrointestinal delivery and/or absorption. See also CDER *Guidance for Industry, Orally Disintegrating Tablets*.
Oro-Pharyngeal: A route of administration characterized by deposition of a preparation into the oral cavity and/or pharyngeal region to exert a local or systemic effect.
Otic: A route of administration (mucosal) characterized by deposition of a preparation into, or by way of, the ear. Sometimes referred to as *Aural* (*Aural* not preferred).
Paste: A semisolid dosage form containing a high percentage (e.g., 20%–50%) of finely dispersed solids with a stiff consistency. This dosage form is intended for application to the skin, oral cavity, or mucous membranes.
Patch (not preferred): Frequently used to describe a *Transdermal System*.
Pellet: A small solid dosage form of uniform, often spherical, shape. Spherical pellets are sometimes referred to as *Beads*. Pellets intended as implants must be sterile.
Periodontal: Descriptive term for a preparation that is applied around a tooth for localized action.
Pill (not preferred but frequently incorrectly used to describe a *Tablet*): A solid spherical pharmaceutical dosage form, usually prepared by a wet massing technique. This term is not used in article names.
Plaster: A dosage form containing a semisolid composition supplied on a support material for external application. Plasters are applied for prolonged periods of time to provide protection, support, or occlusion (for macerating action).
Powder: A dosage form composed of a solid or mixture of solids reduced to a finely divided state and intended for internal or external use.
Powder, Inhalation: A powder containing an API for oral inhalation. The powder is used with a device that aerosolizes and delivers an accurately metered amount.
Prolonged-Release (not preferred; see *Extended-Release*)
Rectal: A route of administration (mucosal) characterized by deposition into the rectum to provide local or systemic effect.

Copyright (c) 2013 The United States Pharmacopeial Convention. All rights reserved.

Semisolid: Attribute of a material characterized by a reduced ability to flow or conform to its container at room temperature. A semisolid does not flow at low shear stress and generally exhibits plastic flow behavior. This term is not used in article names.
Shampoo: A solution or suspension dosage form used to clean the hair and scalp. May contain an API intended for topical application to the scalp.
Soap: The alkali salt(s) of a fatty acid or mixture of fatty acids used to cleanse the skin. Soaps used as dosage forms may contain an API intended for topical application to the skin. Soaps have also been used as liniments and enemas.
Soft Gel Capsule (not preferred; see *Capsule*): A specific capsule type characterized by increased levels of plasticizers producing a more pliable and thicker-walled material than hard gelatin capsules. Soft gel capsules are further distinguished because they are single-piece sealed dosages. Frequently used for delivering liquid compositions.
Solution: A clear, homogeneous liquid dosage form that contains one or more chemical substances dissolved in a solvent or mixture of mutually miscible solvents.
Spirit (not preferred; see *Solution*): A liquid dosage form composed of an alcoholic or hydroalcoholic solution of volatile substances.
Spray: Attribute that describes the generation of droplets of a liquid or solution to facilitate application to the intended area.
Stent, Drug-Eluting: A specialized form of implant used for extended local delivery of the API to the immediate location of stent placement.
Strip (not preferred; see *Tape*): A dosage form or device in the shape of a long, narrow, thin solid material.
Sublingual: A route of administration (mucosal) characterized by placement underneath the tongue and for release of the API for absorption in that region.
Suppository: A solid dosage form in which one or more APIs are dispersed in a suitable base and molded or otherwise formed into a suitable shape for insertion into the rectum to provide local or systemic effect.
Suspension: A liquid dosage form that consists of solid particles dispersed throughout a liquid phase.
Syrup (not preferred; see *Solution*): A solution containing high concentrations of sucrose or other sugars. This term is commonly used in compounding pharmacy.
Tablet: A solid dosage form prepared from powders or granules by compaction.
Tape, Medicated: A dosage form or device composed of a woven fabric or synthetic material onto which an API is placed, usually with an adhesive on one or both sides to facilitate topical application.
Tincture (not preferred; see *Solution*): An alcoholic or hydroalcoholic solution prepared from vegetable materials or from chemical substances.
Topical: A route of administration characterized by application to the outer surface of the body.
Transdermal System: Dosage forms designed to deliver the API(s) through the skin into the systemic circulation. Transdermal systems are typically composed of an outer covering (barrier), a drug reservoir (that may incorporate a rate-controlling membrane), a contact adhesive to affix the transdermal system to the administration site, and a protective layer that is removed immediately prior to application of the transdermal system.
Troche (not preferred; see *Lozenge*): A solid dosage form intended to disintegrate or dissolve slowly in the mouth and usually prepared by compaction in a manner similar to that used for tablets.
Urethral: A route of administration (mucosal) characterized by deposition into the urethra.
Vaginal: A route of administration (mucosal) characterized by deposition into the vagina.
Vehicle: A term commonly encountered in compounding pharmacy that refers to a component for internal or external use that is used as a carrier or diluent in which liquids, semisolids, or solids are dissolved or suspended. Examples include water, syrups, elixirs, oleaginous liquids, solid and semisolid carriers, and proprietary products (see *Excipient*). This term is not used in article names.
Veterinary: Descriptive term for dosage forms intended for nonhuman use.

⟨1177⟩ GOOD PACKAGING PRACTICES

This chapter provides general guidance on packaging considerations for Pharmacopeial preparations that may be stored, transported, and distributed. It describes procedures that should be considered to ensure that proper packaging practices are maintained. It does not affect any applicable requirements under good manufacturing practices, state laws governing pharmacy, the *USP General Notices and Requirements* or monographs, or provisions under approved labeling.

Definitions for storage conditions and packaging are provided in ⟨659⟩ *Packaging and Storage Requirements*. All equipment used for recording, monitoring, and maintaining these temperature and humidity conditions should be calibrated on a regular basis. This calibration should be traceable to national or international standards (see also the general information chapter *Monitoring Devices—Time, Temperature, and Humidity* ⟨1118⟩).

CONTAINERS

The monograph packaging and storage statement specifies that the container (primary package) should meet the requirements under *Containers—Glass* ⟨660⟩, *Containers—Plastic* ⟨661⟩, and *Containers—Performance Testing* ⟨671⟩, which include the stipulations for determining if a container is "tight" or "well-closed." In most cases, compendial preparations are expected to be packaged in "tight" containers, especially if the article is moisture sensitive. In addition, where necessary, the packaging component should protect the preparation from light, reactive gases, solvent loss, microbial contamination, etc. "Tight" and "well-closed" containers

Accessed from 167.78.4.19 by James Cumbie (ocean22) on Mon Sep 09 15:04:23 EDT 2013

are clearly defined in ⟨659⟩ *Packaging and Storage Requirements*, whereas testing protocol and moisture permeation limits to determine if the container meets either of these definitions can be found in *Containers—Glass* ⟨660⟩, *Containers—Plastic* ⟨661⟩, and *Containers—Performance Testing* ⟨671⟩ for single-unit and multiple-unit containers.

A packaging system is composed of a container system with its closure. This system may include several layers of protection for the Pharmacopeial preparation along with any sealing devices, delivery devices, labeling, and package inserts. The *General Notices* section also provides definitions for types of packaging systems that contain and protect a Pharmacopeial preparation (e.g., single-unit containers, unit-dose containers, etc.). Stability testing is conducted on the dosage forms packaged in the container–closure system proposed for marketing.

One type of permeation test for multiple-unit containers is described in *Containers—Performance Testing* ⟨671⟩. This test is intended for drug products being dispensed on prescription in vials with a container–closure system. The results of the test reflect the water vapor permeation through the container and through the closure. Limits have been established to define whether a container for dispensing has tight or well-closed characteristics with regard to water vapor permeation. FDA recommends that manufacturers perform this test on the container–closure system, although it is not specified in *USP*. In this particular test, the inner seal of the manufacturer's container–closure system is removed prior to testing.

Single-unit containers for capsules and tablets under *Containers—Performance Testing* ⟨671⟩ are measured for water vapor permeation according to the criteria for the four classes of containers (classes A–D).

The *USP* recognizes several official container materials that can be selected on the basis of their properties. Most containers are made of glass or plastic. Glass containers must be evaluated for chemical resistance and light transmission (if indicated) as described in *Containers—Glass* ⟨660⟩. In addition, injectable medication containers should be reviewed according to the section *Packaging* under *Injections* ⟨1⟩. Elastomeric closures should be evaluated separately as described in *Elastomeric Closures for Injections* ⟨381⟩. Plastic containers should be assessed using different criteria for the three types of plastics as described in the following sections under *Containers—Plastic* ⟨661⟩: *Polyethylene Containers* (PE) for dry oral solid dosage forms, *Polyethylene Terephthalate Bottles and Polyethylene Terephthalate G Bottles* (PET, PETG) for liquid oral dosage forms, and *Polypropylene Containers* (PP) for dry solid and liquid oral dosage forms. As articulated in these sections, plastics should undergo testing for light transmission (if appropriate), water vapor permeation (see also *Containers—Performance Testing* ⟨671⟩), extraction physiochemical testing, and biological testing (see also *Biological Reactivity Tests, In Vitro* ⟨87⟩ and *Biological Reactivity Tests, In Vivo* ⟨88⟩). For example, testing water vapor permeation for a PE container is conducted by sealing the container with heat-sealed foil laminate and measuring the water permeation in a humid atmosphere. Given that water vapor does not permeate the foil laminate, this test assesses only the properties of the container. The level of protection provided by a packaging system marketed with a heat-sealed foil laminate inner seal (prior to removal of the foil) is approximated by this test. However, in the case of a PET bottle for liquid preparations, water vapor permeation testing is done by filling containers with water and measuring the water loss rate in a dry atmosphere. Additional testing may be required for certain pharmaceutical dosage forms as well.

The container–closure system for the storage or shipment of a bulk liquid drug substance is typically plastic, stainless steel, a glass-lined metal container, or an epoxy-lined metal container with a rugged, tamper-resistant closure. Qualification of the container–closure system for these types of preparations includes evaluation for solvent and gas permeation, light transmittance, closure integrity, ruggedness in shipment, protection against microbial contamination through the closure, and compatibility and safety of the packaging components as appropriate (see *Containers—Glass* ⟨660⟩ and *Containers—Plastics* ⟨661⟩).

Other information on container–closure systems may be found in FDA's *Guidance for Industry: Container Closure System for Packaging Human Drugs and Biologics,* www.fda.gov.

PACKAGING

Packaging for Pharmacopeial articles can be divided into categories according to terminology generally accepted by industry. As mentioned earlier, the *General Notices* section provides some definitions for different types of containers classified by their characteristics and uses. In addition, the ASTM Committee D10 on packaging publishes terminology, practices, test methods, specifications, guides, and classifications for testing and evaluating packaging (see ASTM D99695, "Standard Terminology of Packaging and Distribution Environments"). Under certain rules and guidelines (e.g., such as 49 CFR, Dangerous Goods, and others), however, alternate terminology is used for the components described below. For terminology pertaining to repackaging processes, refer to *Packaging and Repackaging—Single-Unit Containers* ⟨1136⟩.

Primary Container—This container is in direct contact with the Pharmacopeial preparation. The purpose of a primary container, also referred to as an immediate container, is to protect the preparation from environmental hazards during storage and handling. In some cases, the primary container is also a specialized delivery system, such as an aerosol or a metered-dose dispenser (see *Pharmaceutical Dosage Forms* ⟨1151⟩). For the majority of oral dosage forms, the primary container consists of a cap and a bottle or a blister or pouch package that can be made from many different materials, including glass, plastic, single or laminated flexible materials, and metal. All components of the primary container must meet the requirements under 21 CFR for direct food contact and, where applicable, the *USP* requirements under *Containers—Glass* ⟨660⟩, *Containers—Plastic* ⟨661⟩, and *Containers—Performance Testing* ⟨671⟩. A full description of the primary container is included under the "Container/Closure System" section of the New Drug Application (NDA), Abbreviated New Drug Application (ANDA), or other classes of FDA submissions.

Critical Secondary Container—This container is not in direct contact with the article, but it provides essential product stability protection. For example, a primary container may be packed inside a critical secondary container such as a pouch to provide moisture, gas, light, or microbial protection not afforded by the primary container. A description of the critical secondary container is included under the "Container/Closure System" section of the NDA, ANDA, or other classes of FDA submissions.

Secondary Container—This container encloses one or more primary containers. A secondary container is not always present. If used, it is usually designed for the final market presentation. Secondary containers are often used simply to carry required labeling or

Copyright (c) 2013 The United States Pharmacopeial Convention. All rights reserved.

to keep individual primary containers together with delivery systems or other add-on features. Secondary containers can also provide protection against damage in the handling and distribution system. The most common secondary container is the standard folding carton. Some products, such as syringes, may be placed in trays prior to packing in a carton. Secondary container materials are not included in the container and closure description and require neither stability studies nor prior approval when making a change in the materials used.

Additional Packaging—A wide variety of additional packaging, such as trays and display cartons, may be used to hold primary containers.

Unit of Sale—This may be an individual bottle, a carton containing one or more bottles, or a tray with multiple primary containers. A unit of sale may contain more than one item for individual sale. For example, a display tray may have multiples of a single article or a variety of related articles from a single manufacturer, each intended for individual sale. The individual item intended for sale is referred to as a stock-keeping-unit (SKU). SKUs are distinguished by a discrete National Drug Code (NDC). Over-the-counter (OTC) articles contain a Universal Product Code (UPC) for all SKUs. A prescription SKU may be intended for final consumer use and may not be repackaged by a pharmacy. Such packages, often called "unit of issue" or "unit of use," require child-resistant (CR) packaging as described under 16 CFR 1700, "Poison Prevention Packaging," except for packages exempted by the Consumer Product Safety Commission. The CR feature is typically incorporated by the manufacturer (see *Packaging and Repackaging—Single-Unit Containers* ⟨1136⟩). OTC articles are regulated under the same rule, but only if they contain certain active ingredients above specified limits. Any regulated product shipped via the United States Postal Service (USPS) must meet the USPS rules under 39 CFR 111.

Final Exterior Package—This is typically a corrugated fiberboard box (case) or a wrapper. The shipping case label is affixed to this outermost layer and incorporates all of the bar codes required by the National Wholesale Druggists' Association (NWDA). This final package is normally shipped on pallets to distribution centers, wholesalers, and other large-volume customers. The manufacturer may or may not intend that this package enter the small-package-shipping environment as an individual unit without further protection.

Especially with fiberboard boxes, relative humidity (RH) may have a negative effect on the compression strength of the box, causing loads to shift and potentially damage the article or the outer and inner packaging. Articles stored in refrigerators or freezers, which are environments with high RH, are prone to this type of damage when stacked. The problem may be exacerbated by carton design, stacking pattern, or use of low edge-crush-test corrugated fiberboard. Computer programs are available to determine the acceptable stack height and patterns on the basis of carton weight, style, size, and material. If problems occur, the product manufacturer should be contacted. Source materials and reference information on corrugated fiberboard boxes can be found in the "Fiber Box Handbook" published by the Fiber Box Association.

A wholesaler or other reshipper should not assume that the package received from the manufacturer is suitable for reuse. Many packages are customized for very specific routes and modes of transportation and are not suitable for other applications. Like any other shipping container, insulated cartons and inner protective packaging can be damaged during transit, thus affecting package performance and possibly allowing damage to contents if reused.

ENVIRONMENTAL ISSUES

Packaging materials are regulated by a variety of federal, state, and local rules. In general, most pharmaceutical packaging containers can be recycled within local programs. The use of recycled material in primary containers is governed by the FDA, but it is generally not allowed. Pharmaceutical manufacturers commonly follow the most current Coalition of Northeastern Governors' rules (e.g., Model Toxics in Packaging Legislation) regarding heavy metals in packaging and other environmental issues.

Certain classes of Pharmacopeial articles may require special handling. Such articles include products classified as (1) Dangerous Goods under the Department of Transportation (DOT), state, local, or carrier rules; (2) controlled drugs under the Drug Enforcement Administration (DEA); or (3) scheduled substances under state regulations.

LABELING

The labeling of shipping containers by manufacturers must be in compliance with the pertinent sections of FDA and DOT rules.

Dangerous Goods—The labeling of shipments classified as *Dangerous Goods,* including all information on the bill of lading or airway bill, must follow the instructions provided by the DOT, the International Air Transport Association (IATA), and the carrier. The exterior package must carry all of the required standard symbols for the class of goods, and the shipping container must comply with the performance standards for the articles enclosed. The shipper of record is responsible for compliance with the Dangerous Goods requirements.

Controlled Substances—When Pharmacopeial preparations that contain DEA-scheduled controlled substances are distributed to a patient directly via the USPS, these articles must be marked and labeled in accordance with USPS Domestic Mail Manual, Regulation Article C023, Section 7.2.

Accessed from 167.78.4.19 by James Cumbie (ocean22) on Mon Sep 09 15:04:23 EDT 2013

⟨1178⟩ GOOD REPACKAGING PRACTICES

INTRODUCTION

This chapter is intended to provide guidance to those engaged in repackaging of oral solid drug products; and the chapter provides information to any person who removes drugs from their original container–closure system (new primary package) and repackages them into a different container–closure system for sale and/or for distribution.

This chapter does not apply to pharmacists engaged in dispensing prescription drugs in accordance with state practice of pharmacy. The pharmacist needs to apply

(1) the principal information provided in the USP general information chapter *Packaging—Unit-of-Use* ⟨1136⟩ and
(2) other beyond-use date references in the subsection *Expiration Date and Beyond-Use Date* in the *Labeling* section under *General Notices and Requirements*.

DEFINITIONS

⟨659⟩ *Packaging and Storage Requirements* provides definitions related to repackaging. For the purposes of this chapter, a repackager, a contract packager, and an equivalent container–closure system are defined as follows:

1. **Repackager**—A repackager is an establishment that repackages drugs and sends them to a second location in anticipation of a need. Repackaging firms repackage preparations for distribution (e.g., for resale to distributors, hospitals, or other pharmacies), a function that is beyond the regular practice of a pharmacy. Distribution is not patient-specific in that there are no prescriptions. Unlike dispensers, repackaging firms are required to register with the FDA and to comply with the Current Good Manufacturing Practice Regulations in 21 CFR 210 and 211.
2. **Contract Packager**—A contract packager is an establishment that is contracted to package or repackage a drug product into a single- or multi-unit container. These containers should meet all of the applicable requirements in this chapter. A contract packager does not take ownership from the manufacturer and generally receives the assigned expiration date from the contractor.
3. **Equivalent Container–Closure System**—This term refers to a container–closure system that is at least as protective or more protective than the original container–closure system in terms of moisture vapor transmission rate (MVTR), oxygen transmission, light transmission, and compatibility of the container–closure system with the drug product. System equivalency extends to any special protective materials, such as for light transmission, seals, or desiccants associated with the original container–closure system. These values may be determined by the repackager, or they may be obtained from the container–closure vendor for the specific container–closure system under consideration.

ESTABLISHING EXPIRATION DATE

In the absence of stability data, the following criteria should be considered by repackagers when assigning an expiration date.

Unit-Dose Packaging

1. The original container–closure system of the drug product to be used for repackaging must be received un-opened and show no outward signs of having been previously opened.
2. The unit-dose container–closure system must meet the testing requirements under *Containers—Performance Testing* ⟨671⟩ for either *Class A* or *Class B* containers.
3. The contents of the original bulk drug product to be repackaged are repackaged at one time unless the repackager has data and/or other scientific information from literature sources demonstrating that the drug product is not sensitive to exposure to moisture, oxygen, or light.
4. The unit-dose container–closure system must meet or exceed the original container's specification for light resistance.
5. The conditions of storage must meet the storage specifications provided in the *USP General Notices* and as described in the labeling of the original container–closure system received for repackaging. Where no specific storage conditions are specified, the product must be maintained at controlled room temperature and in a dry place during the repackaging process, including storage.
6. The expiration dating period used for the repackaged product does not exceed (1) 6 months from the date of repackaging; or (2) the manufacturer's expiration date; or (3) 25% of the time between the date of repackaging and the expiration date shown on the manufacturer's bulk article container of the drug being repackaged, whichever is earlier.
7. Nitroglycerin Sublingual Tablets or any other drug product known to have stability problems should not be repackaged. This would include any drug known to be oxygen-sensitive or one that exhibits extreme moisture or light sensitivity. In deciding whether a particular drug product is suitable for repackaging, the repackager should take into consideration any available information from the manufacturer, published literature, the USP, and the FDA.
8. Documentation must be maintained to demonstrate that the preceding criteria are met.
9. Documentation must be maintained that specifies the container–closure packaging material used in repackaging operations.

Copyright (c) 2013 The United States Pharmacopeial Convention. All rights reserved.

Multiple-Unit Packaging

1. A repackager may use the manufacturer's original expiration date without additional stability testing if the drug product is repackaged into an equivalent container–closure system that is at least as protective as, or more protective than, the original system and complies with criteria established for equivalency.
2. The original container–closure system of the drug product to be used for repackaging must be received un-opened and shows no outward signs of having been previously opened.
3. The contents of the original bulk drug product to be repackaged are repackaged at one time unless the repackager has data and/or other scientific information from literature sources demonstrating that the drug product is not sensitive to exposure to moisture, oxygen, or light.
4. The conditions of storage meet the storage specifications in the *USP General Notices* and as described in the labeling of the original container–closure system received for repackaging. When no specific storage conditions are specified, the product should be maintained at controlled room temperature and in a dry place during repackaging operations.
5. The type of container–closure system used for repackaging must be at least as protective or more protective than the original container–closure system in terms of moisture vapor transmission rate (MVTR), oxygen transmission, light transmission, and compatibility of the container–closure system with the drug product. System equivalency extends to any special protective materials, such as for light transmission, seals, or desiccants associated with the original container–closure system.
6. The container–closure system must meet or exceed the original container–closure system's results for light transmission.
7. Nitroglycerin Sublingual Tablets or any other drug product known to have stability problems should not be repackaged. This would include any drug known to be oxygen-sensitive or one that exhibits extreme moisture or light sensitivity. In deciding whether a particular drug product is suitable for repackaging, the repackager should take into consideration any available information from the manufacturer, published literature, the USP, and the FDA.
8. Documentation must be maintained to demonstrate that the preceding criteria are met.
9. Documentation must be maintained that specifies the container–closure packaging material used in repackaging operations.

REFERENCES FOR REPACKAGING REGULATIONS AND GUIDANCES

The references listed below are not meant to be all inclusive: specific repackaging operations may have additional requirements.

- **Food, Drug, and Cosmetic Act**
- **Food and Drug Administration Regulations and Guidances**

Enforcement Policy: 21 CFR, Part 7
General Labeling Provisions: 21 CFR, Part 201, Subpart A
Drug Establishment Registration and Listing: 21 CFR, Part 207.20
Current Good Manufacturing Regulations: 21 CFR, Parts 210–211
Special Requirements for Specific Human Drugs: 21 CFR, Part 250
Controlled Substances: 21 CFR, Part 1300
Potable Water: 40 CFR, Part 141
FDA *Compliance Policy Guides,* including the following:
Sub Chapter 430 Labeling and Repackaging
Sub Chapter 460 Pharmacy Issues
Sub Chapter 480 Stability/Expiration Dating

- **Applicable USP Chapters**

⟨660⟩ *Containers—Glass*
⟨661⟩ *Containers—Plastics*
⟨671⟩ *Containers—Performance Testing*
⟨1079⟩ *Good Storage and Shipping Practices*
⟨1136⟩ *Packaging and Repackaging—Single-Unit Containers*

⟨1191⟩ STABILITY CONSIDERATIONS IN DISPENSING PRACTICE

NOTE—Inasmuch as this chapter is for purposes of general information only, no statement in the chapter is intended to modify or supplant any of the specific requirements pertinent to Pharmacopeial articles, which are given elsewhere in this Pharmacopeia.

Aspects of drug product stability that are of primary concern to the pharmacist in the dispensing of medications are discussed herein.

Pharmacists should avoid ingredients and conditions that could result in excessive physical deterioration or chemical decomposition of drug preparations, especially when compounding (see *Pharmaceutical Compounding—Nonsterile Preparations* ⟨795⟩). The stability and clinical effect of manufactured dosage forms can be greatly compromised by seemingly negligible alterations or inappropriate prescription compounding. Pharmacists should establish and maintain compounding conditions that include the ensuring of drug stability to help prevent therapeutic failure and adverse responses.

Accessed from 167.78.4.19 by James Cumbie (ocean22) on Mon Sep 09 15:04:23 EDT 2013

Stability—Stability is defined as the extent to which a product retains, within specified limits, and throughout its period of storage and use (i.e., its shelf-life), the same properties and characteristics that it possessed at the time of its manufacture. Five types of stability generally recognized are shown in the accompanying table.

Criteria for Acceptable Levels of Stability

Type of Stability	Conditions Maintained Throughout the Shelf Life of the Drug Product
Chemical	Each active ingredient retains its chemical integrity and labeled potency, within the specified limits.
Physical	The original physical properties, including appearance, palatability, uniformity, dissolution, and suspendability, are retained.
Microbiological	Sterility or resistance to microbial growth is retained according to the specified requirements. Antimicrobial agents that are present retain effectiveness within the specified limits.
Therapeutic	The therapeutic effect remains unchanged.
Toxicological	No significant increase in toxicity occurs.

FACTORS AFFECTING PRODUCT STABILITY

Each ingredient, whether therapeutically active or pharmaceutically necessary, can affect the stability of drug substances and dosage forms. The primary environmental factors that can reduce stability include exposure to adverse temperatures, light, humidity, oxygen, and carbon dioxide. The major dosage form factors that influence drug stability include particle size (especially in emulsions and suspensions), pH, solvent system composition (i.e., percentage of "free" water and overall polarity), compatibility of anions and cations, solution ionic strength, primary container, specific chemical additives, and molecular binding and diffusion of drugs and excipients. In dosage forms, the following reactions usually cause loss of active drug content, and they usually do not provide obvious visual or olfactory evidence of their occurrence.

Hydrolysis—Esters and β-lactams are the chemical bonds that are most likely to hydrolyze in the presence of water. For example, the acetyl ester in aspirin is hydrolyzed to acetic acid and salicylic acid in the presence of moisture, but in a dry environment the hydrolysis of aspirin is negligible. The aspirin hydrolysis rate increases in direct proportion to the water vapor pressure in an environment.

The amide bond also hydrolyzes, though generally at a slower rate than comparable esters. For example, procaine (an ester) will hydrolyze upon autoclaving, but procainamide will not. The amide or peptide bond in peptides and proteins varies in the lability to hydrolysis.

The lactam and azomethine (or imine) bonds in benzodiazepines are also labile to hydrolysis. The major chemical accelerators or catalysts of hydrolysis are adverse pH and specific chemicals (e.g., dextrose and copper in the case of ampicillin hydrolysis).

Epimerization—Members of the tetracycline family are most likely to incur epimerization. This reaction occurs rapidly when the dissolved drug is exposed to a pH of an intermediate range (higher than 3), and it results in the steric rearrangement of the dimethylamino group. The epimer of tetracycline, epitetracycline, has little or no antibacterial activity.

Decarboxylation—Some dissolved carboxylic acids, such as *p*-aminosalicylic acid, lose carbon dioxide from the carboxyl group when heated. The resulting product has reduced pharmacological potency.

β-Keto decarboxylation can occur in some solid antibiotics that have a carbonyl group on the β-carbon of a carboxylic acid or a carboxylate anion. Such decarboxylations will occur in the following antibiotics: carbenicillin sodium, carbenicillin free acid, ticarcillin sodium, and ticarcillin free acid.

Dehydration—Acid-catalyzed dehydration of tetracycline forms epianhydrotetracycline, a product that both lacks antibacterial activity and causes toxicity.

Oxidation—The molecular structures most likely to oxidize are those with a hydroxyl group directly bonded to an aromatic ring (e.g., phenol derivatives such as catecholamines and morphine), conjugated dienes (e.g., vitamin A and unsaturated free fatty acids), heterocyclic aromatic rings, nitroso and nitrite derivatives, and aldehydes (e.g., flavorings). Products of oxidation usually lack therapeutic activity. Visual identification of oxidation, for example, the change from colorless epinephrine to its amber colored products, may not be visible in some dilutions or to some eyes.

Oxidation is catalyzed by pH values that are higher than optimum, polyvalent heavy metal ions (e.g., copper and iron), and exposure to oxygen and UV illumination. The latter two causes of oxidation justify the use of antioxidant chemicals, nitrogen atmospheres during ampul and vial filling, opaque external packaging, and transparent amber glass or plastic containers.

Photochemical Decomposition—Exposure to, primarily, UV illumination may cause oxidation (photo-oxidation) and scission (photolysis) of covalent bonds. Nifedipine, nitroprusside, riboflavin, and phenothiazines are very labile to photo-oxidation. In susceptible compounds, photochemical energy creates free radical intermediates, which can perpetuate chain reactions.

Ionic Strength—The effect of the total concentration of dissolved electrolytes on the rate of hydrolysis reactions results from the influence of ionic strength on interionic attraction. In general, the hydrolysis rate constant is inversely proportional to the ionic strength with oppositely charged ions (e.g., drug cation and excipient anions) and directly proportional to the ionic strength with ions of like charge. A reaction that produces an ion of opposite charge to the original drug ion because of the increasing ionic strength, can increase the drug hydrolysis rate as the reaction proceeds. High ionic strength of inorganic salts can also reduce the solubility of some other drugs.

Copyright (c) 2013 The United States Pharmacopeial Convention. All rights reserved.

pH Effect—The degradation of many drugs in solution accelerates or decelerates exponentially as the pH is decreased or increased over a specific range of pH values. Improper pH ranks with exposure to elevated temperature as a factor most likely to cause a clinically significant loss of drug, resulting from hydrolysis and oxidation reactions. A drug solution or suspension, for example, may be stable for days, weeks, or even years in its original formulation, but when mixed with another liquid that changes the pH, it degrades in minutes or days. It is possible that a pH change of only 1 unit (e.g., from 4 to 3 or 8 to 9) could decrease drug stability by a factor of 10 or greater.

A pH buffer system, which is usually a weak acid or base and its salt, is a common excipient used in liquid preparations to maintain the pH in a range that minimizes the drug degradation rate. The pH of drug solutions may also be either buffered or adjusted to achieve drug solubility. For example, pH in relation to pKa controls the fractions of the usually more soluble ionized and less soluble nonionized species of weak organic electrolytes.

The influence of pH on the physical stability of two phase systems, especially emulsions, is also important. For example, intravenous fat emulsion is destabilized by acidic pH.

Interionic (Ion^{N+}–Ion^{N-}) Compatibility—The compatibility or solubility of oppositely charged ions depends mainly on the number of charges per ion and the molecular size of the ions. In general, polyvalent ions of opposite charge are more likely to be incompatible. Thus, an incompatibility is likely to occur upon the addition of a large ion with a charge opposite to that of the drug.

Solid State Stability—Solid state reactions are relatively slow; thus, stability of drugs in the solid state is rarely a dispensing concern. The degradation rate of dry solids is usually characterized by first-order kinetics or a sigmoid curve. Therefore, solid drugs with lower melting point temperatures should not be combined with other chemicals that would form a eutectic mixture.

When moisture is present, the solid drug decomposition may change to zero-order chemical kinetics because the rate is controlled by the relatively small fraction of the drug that exists in a saturated solution, which is located (usually imperceptibly) at the surface or in the bulk of the solid drug product.

Temperature—In general, the rate of a chemical reaction increases exponentially for each 10° increase in temperature. This relationship has been observed for nearly all drug hydrolysis and some drug oxidation reactions. The actual factor of rate increase depends on the activation energy of the particular reaction. The activation energy is a function of the specific reactive bond and the drug formulation (e.g., solvent, pH, additives). As an example, consider a hydrolyzable drug that is exposed to a 20° increase in temperature, such as that from cold to controlled room temperature (see *General Notices and Requirements*). The shelf life of the drug at controlled room temperature should be expected to decrease to one-fourth to one-twenty-fifth of its shelf life under refrigeration.

The pharmacist should also be aware that inappropriately cold temperatures may cause harm. For example, refrigeration may cause extreme viscosity in some liquid drugs and cause supersaturation in others. Freezing may either break or cause a large increase in the droplet size of emulsions; it can denature proteins; and in rare cases, it can cause less soluble polymorphic states of some drugs to form.

STABILITY STUDIES IN MANUFACTURING

The scope and design of a stability study vary according to the product and the manufacturer concerned. Ordinarily the formulator of a product first determines the effects of temperature, light, air, pH, moisture, trace metals, and commonly used excipients or solvents on the active ingredient(s). From this information, one or more formulations of each dosage form are prepared, packaged in suitable containers, and stored under a variety of environmental conditions, both exaggerated and normal. At appropriate time intervals, samples of the product are assayed for potency by use of a stability-indicating method, observed for physical changes, and, where applicable, tested for sterility and or for resistance to microbial growth and for toxicity and bioavailability. Such a study, in combination with clinical and toxicological results, enables the manufacturer to select the optimum formulation and container and to assign recommended storage conditions and an expiration date for each dosage form in its package.

Responsibility of Pharmacists

Pharmacists help to ensure that the products under their supervision meet acceptable criteria of stability by (1) dispensing oldest stock first and observing expiration dates, (2) storing products under the environmental conditions stated in the individual monographs, labeling, or both, (3) observing products for evidence of instability, (4) properly treating and labeling products that are repackaged, diluted, or mixed with other products, (5) dispensing in the proper container with the proper closure, and (6) informing and educating patients concerning the proper storage and use of the products, including the disposition of outdated or excessively aged prescriptions.

Rotation of Stock and **Observance of Expiration Dates**—Proper rotation of stock is necessary to ensure the dispensing of suitable products. A product that is dispensed infrequently should be closely monitored so that old stocks are given special attention, particularly with regard to expiration dates. The manufacturer can guarantee the quality of a product up to the time designated as its expiration date only if the product has been stored in the original container under recommended storage conditions.

Storage under Recommended Environmental Conditions—In most instances, the recommended storage conditions are stated on the label, in which case it is imperative to adhere to those conditions. They may include a specified temperature range or a designated storage place or condition (e.g., "refrigerator," or "controlled room temperature") as defined in the *General Notices.* Supplemental instructions, such as a direction to protect the product from light, also should be followed carefully. Where a product is required to be protected from light and is in a clear or translucent container enclosed in an opaque outer covering, such outer covering is not to be removed and discarded until the contents have been used. In the absence of specific instructions, the product

Accessed from 167.78.4.19 by James Cumbie (ocean22) on Mon Sep 09 15:04:23 EDT 2013

should be stored at controlled room temperature (see *Storage Temperature* in the *General Notices*). The product should be stored away from locations where excessive or variable heat, cold, or light prevails, such as those near heating pipes or fluorescent lighting.

Observing Products for Evidence of Instability—Loss of potency usually results from a chemical change, the most common reactions being hydrolysis, oxidation-reduction, and photolysis. Chemical changes may also occur through interaction between ingredients within a product, or rarely between product and container. An apparent loss of potency in the active ingredient(s) may result from diffusion of the drug into, or its combination with, the surface of the container-closure system. An apparent gain in potency usually is caused by solvent evaporation or by leaching of materials from the container–closure system.

The chemical potency of the active ingredient(s) is required to remain within the limits specified in the monograph definition. Potency is determined by means of an assay procedure that differentiates between the intact molecule and its degradation products. Chemical stability data should be available from the manufacturer. Although chemical degradation ordinarily cannot be detected by the pharmacist, excessive chemical degradation sometimes is accompanied by observable physical changes. In addition, some physical changes not necessarily related to chemical potency, such as change in color and odor, formation of a precipitate, or clouding of solution, may serve to alert the pharmacist to the possibility of a stability problem. It should be assumed that a product that has undergone a physical change not explained in the labeling may also have undergone a chemical change, and such a product is never to be dispensed. Excessive microbial growth, contamination, or both, may also appear as a physical change. A gross change in a physical characteristic such as color or odor is a sign of instability in any product. Other common physical signs of deterioration of dosage forms include the following.

Solid Dosage Forms—Many solid dosage forms are designed for storage under low-moisture conditions. They require protection from environmental water and therefore should be stored in tight containers (see *Containers* in the *General Notices*) or in the container supplied by the manufacturer. The appearance of fog or liquid droplets, or clumping of the product, inside the container signifies improper conditions. The presence of a desiccant inside the manufacturer's container indicates that special care should be taken in dispensing. Some degradation products, for example, salicylic acid from aspirin, may sublime and be deposited as crystals on the outside of the dosage form or on the walls of the container.

HARD AND SOFT GELATIN CAPSULES—Since the capsule formulation is encased in a gelatin shell, a change in gross physical appearance or consistency, including hardening or softening of the shell, is the primary evidence of instability. Evidence of release of gas, such as a distended paper seal, is another sign of instability.

UNCOATED TABLETS—Evidence of physical instability in uncoated tablets may be shown by excessive powder and/or pieces (i.e., crumbling as distinct from breakage) of tablet at the bottom of the container (from abraded, crushed, or broken tablets); cracks or chips in tablet surfaces; swelling; mottling; discoloration; fusion between tablets; or the appearance of crystals that obviously are not part of the tablet itself on the container walls or on the tablets.

COATED TABLETS—Evidence of physical instability in coated tablets is shown by cracks, mottling, or tackiness in the coating and the clumping of tablets.

DRY POWDERS AND GRANULES—Dry powders and granules that are not intended for constitution into a liquid form in the original container may cake into hard masses or change color, which may render them unacceptable.

POWDERS AND GRANULES INTENDED FOR CONSTITUTION AS SUSPENSIONS—Dry powders and granules intended for constitution into solutions or suspensions require special attention. Usually such forms are antibiotics or vitamins that are particularly sensitive to moisture. Since they are always dispensed in the original container, they generally are not subject to contamination by moisture. However, an unusual caked appearance necessitates careful evaluation, and the presence of a fog or liquid droplets inside the container generally renders the preparation unfit for use. Presence of an objectionable odor also may be evidence of instability.

EFFERVESCENT TABLETS, GRANULES, AND POWDERS—Effervescent products are particularly sensitive to moisture. Swelling of the mass or development of gas pressure is a specific sign of instability, indicating that some of the effervescent action has occurred prematurely.

Liquid Dosage Forms—Of primary concern with respect to liquid dosage forms are homogeneity and freedom from excessive microbial contamination and growth. Instability may be indicated by cloudiness or precipitation in a solution, breaking of an emulsion, nonresuspendable caking of a suspension, or organoleptic changes. Microbial growth may be accompanied by discoloration, turbidity, or gas formation.

SOLUTIONS, ELIXIRS, AND SYRUPS—Precipitation and evidence of microbial or chemical gas formation are the two major signs of instability.

EMULSIONS—The breaking of an emulsion (i.e., separation of an oil phase that is not easily dispersed) is a characteristic sign of instability; this is not to be confused with creaming, an easily redispersible separation of the oil phase that is a common occurrence with stable emulsions.

SUSPENSIONS—A caked solid phase that cannot be resuspended by a reasonable amount of shaking is a primary indication of instability in a suspension. The presence of relatively large particles may mean that excessive crystal growth has occurred.

TINCTURES AND FLUIDEXTRACTS—Tinctures, fluidextracts, and similar preparations usually are dark because they are concentrated, and thus they should be scrutinized carefully for evidence of precipitation.

STERILE LIQUIDS—Maintenance of sterility is of course critical for sterile liquids. The presence of microbial contamination in sterile liquids usually cannot be detected visually, but any haze, color change, cloudiness, surface film, particulate or flocculent matter, or gas formation is sufficient reason to suspect possible contamination. Clarity of sterile solutions intended for ophthalmic or parenteral use is of utmost importance. Evidence that the integrity of the seal has been violated on such products should make them suspect.

Semisolids (Creams, Ointments, and Suppositories)—For creams, ointments, and suppositories, the primary indication of instability is often either discoloration or a noticeable change in consistency or odor.

Copyright (c) 2013 The United States Pharmacopeial Convention. All rights reserved.

CREAMS—Unlike ointments, creams usually are emulsions containing water and oil. Indications of instability in creams are emulsion breakage, crystal growth, shrinking due to evaporation of water, and gross microbial contamination.

OINTMENTS—Common signs of instability in ointments are a change in consistency and excessive "bleeding" (i.e., separation of excessive amounts of liquid) and formation of granules or grittiness.

SUPPOSITORIES—Excessive softening is the major indication of instability in suppositories, although some suppositories may dry out and harden or shrivel. Evidence of oil stains on packaging material should warn the pharmacist to examine individual suppositories more closely by removing any foil covering. As a general rule (although there are exceptions), suppositories should be stored in a refrigerator (see *Storage Temperature* in the *General Notices*).

Proper Treatment of Products Subjected to Additional Manipulations—In repackaging, diluting a product or mixing it with another product, the pharmacist may become responsible for its stability.

Repackaging—In general, repackaging is inadvisable. However, if repackaging is necessary, the manufacturer should be consulted concerning potential problems. In the filling of prescriptions, it is essential that suitable containers be used. Appropriate storage conditions and, when appropriate, an expiration date and beyond use date should be indicated on the label of the prescription container. Single-unit packaging calls for care and judgment and for strict observance of the following guidelines: (1) use appropriate packaging materials, (2) if stability data on the new package are not available, repackage at any one time only sufficient stock for a limited time, (3) include on the unit-dose label a lot number and an appropriate beyond-use date, (4) if a sterile product is repackaged from a multiple-dose vial into unit-dose (disposable) syringes, discard the latter if not used within 24 hours, unless data are available to support longer storage, (5) if quantities are repackaged in advance of immediate need, maintain suitable repackaging records showing name of manufacturer, lot number, date, and designation of persons responsible for repackaging and for checking (see *General Notices*), (6) if safety closures are required, use container closure systems that ensure compliance with compendial and regulatory standards for storage.

Dilution or Mixing—If a product is diluted, or if two products are mixed, the pharmacist should observe good professional and scientific procedures to guard against incompatibility and instability. For example, tinctures such as those of belladonna and digitalis contain high concentrations of alcohol to dissolve the active ingredient(s), and they may develop a precipitate if they are diluted or mixed with aqueous systems. Pertinent technical literature and labeling should be consulted routinely; it should be current literature, because at times formulas are changed by the manufacturer. If a particular combination is commonly used, consultation with the manufacturer(s) is advisable. Since the chemical stability of extemporaneously prepared mixtures is unknown, the use of such combinations should be discouraged; if such a mixture involves an incompatibility, the pharmacist might be responsible. Oral antibiotic preparations constituted from powder into liquid form should never be mixed with other products.

Combining parenteral products necessitates special care, particularly in the case of intravenous solutions, primarily because of the route of administration. This area of practice demands the utmost in care, aseptic technique, judgment, and diligence. Because of potential unobservable problems with respect to sterility and chemical stability, all extemporaneous parenteral preparations should be used within 24 hours unless data are available to support longer storage.

Informing and **Educating the Patient**—As a final step in meeting responsibility for the stability of drugs dispensed, the pharmacist is obligated to inform the patient about the proper storage conditions (for example, in a cool, dry place—not in the bathroom) for both prescription and nonprescription products, and to suggest a reasonable estimate of the time after which the medication should be discarded. When beyond-use dates are applied, the pharmacist should emphasize to the patient that the dates are applicable only when proper storage conditions are observed. Patients should be encouraged to clean out their drug storage cabinets periodically.

Add the following:

⟨1197⟩ GOOD DISTRIBUTION PRACTICES FOR BULK PHARMACEUTICAL EXCIPIENTS

SECTION 1. INTRODUCTION AND SCOPE

1.1 Introduction

Excipients are used in virtually all drug products and are essential to product performance and quality. Typically, excipients are manufactured and supplied so that they comply with compendial standards. The pharmaceutical excipient supply chain participants include manufacturers, distributors, brokers, suppliers, traders, transporters, forwarding agents, and repackagers. The quality of pharmaceutical excipients is affected by inadequate control of activities including distribution, packaging, repackaging, labeling, and storage. Improper or inadequately controlled trade and distribution practices can pose a significant risk to the quality of pharmaceutical excipients and can increase the risk of contamination, cross-contamination, adulteration, mix-ups, degradation, or changes in

Accessed from 167.78.4.19 by James Cumbie (ocean22) on Mon Sep 09 15:04:23 EDT 2013

physical or chemical properties. To maintain the original and intended quality, all participants in the excipient supply chain should carry out their activities according to appropriate standards for good trade and distribution practices as discussed in this chapter.

NOTE: The Appendix consists of definitions and acronyms.

1.2 Scope

This general information chapter provides recommendations for those activities and practices that ensure good trade and distribution practices for pharmaceutical excipients in order to ensure their intended quality. These activities and practices include quality management, organization, documentation, premises, storage, equipment, stability, prevention of adulteration, importation, packaging, repackaging, labeling, dispatch, transport, returned goods, and compounding practices. In addition, personnel, authenticity of data, expiration dating, retesting, complaints and recalls, handling of nonconforming materials, internal/external/third-party audits, quality agreements, shelf life, traceability, economically motivated adulteration, and conformance to compendial monographs are included. The procedures outlined here are applicable to all persons and manufacturers involved in the handling of pharmaceutical excipients and apply to every step in the supply chain. This chapter covers all materials designated as, or intended for use as pharmaceutical excipients, beginning with the point at which the starting material is designated for pharmaceutical use.

1.3 General Considerations

Manufacturers, distributors, users, regulators, and consumers expect pharmaceutical excipients to be manufactured, packed, stored, and transported in a manner that does not compromise their suitability for use in medicinal products for human or veterinary use. Because they are components of drug products, excipients are drugs within the meaning of the U.S. Federal Food, Drug, and Cosmetic Act (FD&C Act), and thus the U.S. Food and Drug Administration (FDA) definition of adulteration applies when an excipient is not fit for its intended use.

Excipients are a diverse group of materials. They can be of animal, mineral, synthetic, or vegetable origin, and they include materials that are solids, liquids, or gases. Excipients can be packed and transported in container sizes ranging from a few grams to a railroad tank car.

Because of their diverse nature and the number of ways in which excipients can be transported from the manufacturing site through the supply chain to the ultimate site of use, this general information chapter cannot provide exhaustive detail for specific materials and modes of transport. Rather, this chapter provides general guidance about what is expected of those people and organizations involved in the supply and distribution of pharmaceutical excipients intended for use in the manufacture of pharmaceutical finished products. Hence, there are instances when *USP–NF* chapters *Good Manufacturing Practices for Bulk Pharmaceutical Excipients* ⟨1078⟩, *Bulk Pharmaceutical Excipients—Certificate of Analysis* ⟨1080⟩, and *Significant Change Guide for Bulk Pharmaceutical Excipients* ⟨1195⟩ provide a more detailed guide about what is expected in these specific areas.

Excipients also are used in a variety of industries. Although most drug substances typically are made exclusively for use in pharmaceutical finished products, the pharmaceutical use of an excipient may be only a small fraction of the total use of the material across all industries. This complicates the regulation of both the manufacture and the supply of pharmaceutical excipients. Excipients often are manufactured outside the United States, which further complicates the regulation of the manufacture and the supply of pharmaceutical excipients. Thus, all stages in the supply chain for the pharmaceutical excipient require transparency and proper flow of the necessary information regarding the excipient shipment. In addition, to ensure compliance with this chapter, suppliers of pharmaceutical excipients must follow all applicable national, regional, and local laws and regulations.

1.4 Pharmaceutical-Grade Excipients

Pharmaceutical excipients must be prepared according to the recognized principles of good manufacturing practices (GMPs) using ingredients that comply with specifications designed to ensure that the resulting substances meet the requirements of the compendial monograph (see *General Notices 3.10* and chapter *Good Manufacturing Practices for Bulk Pharmaceutical Excipients* ⟨1078⟩).

USP or *NF* standards apply to any excipient marketed in the United States that is recognized in the compendium and is intended or labeled for use as an ingredient in a pharmaceutical product. The applicable standard applies to such articles whether or not the added designation *"USP"* or *"NF"* is used (see *General Notices 3.10.10*). An ingredient may include the designation *"USP"* or *"NF"* in conjunction with its official title or elsewhere on the label only when a monograph is provided in the compendium and the article complies with the monograph standards and other applicable standards in the compendium including, but not limited to, the principles of GMP manufacture (see *General Notices 3.20*).

When *USP*- or *NF*-grade excipients are unavailable, manufacturers may consider one of the following if its intended use can be adequately justified: referencing other national pharmacopeias for pharmaceutical quality materials (e.g., EP, JP), or the use of food-grade materials that meet *USP–NF* specifications. The pharmaceutical manufacturer/user is responsible for the development and confirmation of suitable quality tests, procedures, and attributes to ensure that the material is appropriate for its intended use and that manufacturing is carried out under GMPs or a quality management system that demonstrates the same level of assurance of quality as that provided in *USP* (see ⟨1078⟩). It is an unacceptable practice to upgrade technical- or industrial-grade material to pharmaceutical-grade quality based only on analytical results that show compliance with the requirements of a pharmacopeial monograph.

1.5 Authenticity of Data

In the United States, the responsibility for the quality of the components of a finished pharmaceutical product lies with the organization that guarantees the quality of the finished pharmaceutical product. Thus, an important consideration in the purchase

Copyright (c) 2013 The United States Pharmacopeial Convention. All rights reserved.

and supply of a pharmaceutical excipient is confirmation that the material is what it purports to be, that it meets specifications, that it was manufactured under applicable GMPs, that it has not been tampered with in any way before arriving at the site of intended use, and that it is fit for its intended use. Certain paperwork should accompany all shipments of pharmaceutical excipients. This paperwork should include a bona fide and legible copy of a Certificate of Analysis (COA) (see *Bulk Pharmaceutical Excipients—Certificate of Analysis* ⟨1080⟩).

When they receive a COA, manufacturers should take appropriate steps to verify the authenticity of the COA and the data contained therein. This has become particularly important in recent years because of instances of adulteration of excipients intended for use in the manufacture of pharmaceutical products. Steps to verify the authenticity of the COA should be taken at all stages in the supply chain.

Data on the COA can be verified in a number of ways, but the excipient user is responsible for confirming that the data are authentic by means of periodic verification of compliance with established specifications as stated in 21 Code of Federal Regulations Part 211 (21 CFR 211; see *Current Good Manufacturing Practice For Finished Pharmaceuticals*, http://www.accessdata.fda.gov/scripts/cdrh/cfdocs/cfcfr/CFRSearch.cfm?CFRPart=211, http://www.fda.gov/downloads/AboutFDA/CentersOffices/CDER/UCM095852.txt). In addition, other documents such as dispatch notes from previous stages in the supply chain can provide further evidence of the pedigree of the excipient shipment. Such documents are termed "pedigree documents".[1]

This chapter may present additional challenges for certain excipient users, e.g., compounding pharmacies. However, those who compound still are obliged to take all reasonable steps to verify that excipients they receive are fit for their intended use. Part of this verification can include an examination of pedigree documents and a signed certificate of conformance (COC) from the suppliers. Information contained in the *USP–NF* monograph's labeling requirements, FDA's Inactive Ingredient Database, and the CFR provide specific information about the excipient's permitted use in FDA-approved products. All purchasers of pharmaceutical excipients should establish written procedures for the verification of data and verification that the excipient is fit for its intended purpose.

SECTION 2: QUALITY, ORGANIZATION, AND DOCUMENTATION

2.1 Quality Management

A Quality Management System (QMS) is a tool by which all parties involved in the excipient supply chain maintain the quality of the excipient. A documented quality policy is the cornerstone of the QMS and formally describes the company's overall philosophy with regard to quality as authorized by top or senior management. Additionally, an appropriate QMS should include:

- An organizational structure capable of supporting the elements of the quality policy
- Documented procedures and relevant records that demonstrate that a product will meet established quality criteria. This is commonly known as quality assurance (QA)
- Established procedures for approving suppliers of starting materials and verifying that they continue to meet agreed-upon requirements
- A material-release testing procedure to confirm the quality of excipients for their intended purpose(s).

Manufacturers should prepare a Quality Manual. The Quality Manual describes the elements of the QMS and includes the quality organizational structure, written policies, procedures, and processes or references to them, and a description of departmental functions as they relate to the policies, procedures, and processes (see *Section 2.3 Documentation Requirements*). In implementing the QMS, companies must ensure that adequate qualified personnel are available to carry out the actions called for in the QMS and must avoid giving any one individual such extensive responsibilities that quality could be at risk.

COC to quality systems such as applicable International Organization for Standardization (ISO) guides or hazard analysis and critical control point (HACCP) analyses are not mandatory but provide assurance that products are produced and handled appropriately. However, certification to these quality systems should not be viewed as a substitute for the information contained in this chapter. In addition, internal audits should be conducted at regular intervals to confirm compliance with GMP (as applicable) and good distribution practices (GDP), and manufacturers should seek opportunities for improvement (see *Section 2.7 Audits: Internal, External, and Third-Party*).

All parties involved in the excipient supply chain share responsibility for the quality and safety of pharmaceutical excipients. These responsibilities should be delineated in a quality agreement between parties in the supply chain (see *Section 2.9 Quality Agreements*). All parties and their activities in the supply chain should be documented, and records should be maintained according to written procedures that ensure the traceability of all products acquired and distributed. All members of the supply chain have an obligation to protect excipients in their custody from deliberate economically motivated adulteration or deliberate introduction of foreign materials that could compromise the quality or performance of the excipient or adversely affect human or animal health.

2.2 Organization and Personnel

The organizational structure should be adequate and sufficiently staffed, and workers should be appropriately authorized for the activities they conduct. An organizational chart should delineate the responsibilities and interrelationships of personnel. Management ultimately is responsible for implementation of GDPs and on-going verification that the QMS is maintaining the intended excipient quality.

Individuals within the company should have clearly defined responsibilities that are documented in writing. All individuals should understand their responsibilities and should be suitably qualified to perform their assigned duties. Their qualifications should be

[1] IPEC. The IPEC Excipient Pedigree White Paper. Arlington, VA: IPEC; ND. Available at: http://ipecamericas.org/sites/default/files/Excipient_Pedigree.pdf (Accessed July 6, 2011).

Accessed from 167.78.4.19 by James Cumbie (ocean22) on Mon Sep 09 15:04:23 EDT 2013

assessed for adequacy for their responsibilities and should be documented. Qualifications can include a combination of formal education, training, and experience. This also extends to any contracted service providers. Procedures should be in place to ensure that permanent, temporary, and contract employees minimize the possibility that unauthorized individuals will handle products.

An employee at each supply chain site should be designated and given the authority and responsibility for the implementation and maintenance of the QMS. The designated employee should have sufficient authority, qualifications, and resources to perform this function, as well as to identify and correct deviations from the QMS. Management and other personnel must not be subject to conflicts of interest or other pressures that could have an adverse effect on their ability to perform their duties related to product quality.

Staff should be aware of the principles of GDP included in this chapter and should receive regular, on-going training relevant to their responsibilities and to general quality principles. All training should be conducted according to a written training plan, and records of this training should be maintained. Personnel who have special duties such as handling hazardous materials or supervising activities required by local legislation may require additional training, including specific hazard management. Effectiveness of training should be verified regularly.

Personnel working with open product must understand and maintain good hygiene, health, and sanitation practices. Staff should use appropriate, nonshedding, protective apparel that will protect the product from the sampler as well as the sampler from the hazards of the product. Established procedures should eliminate the potential for product contamination by personal items such as jewelry, food, drink, or tobacco products. Written procedures that address hygiene, health, sanitation, and protective apparel should be in place.

Each supply channel party should have in place disciplinary procedures to address situations when personnel involved in the handling of products are suspected of or are implicated in inappropriate or illegal activities.

Some quality-related duties may be contracted to third parties, persons, or entities outside of the direct employ of the supplier. The delegation of these activities should be documented in a quality agreement or contract with the third party, and the organization should confirm compliance with the principles of GDP by conducting periodic on-site audits of these third parties. Delegation to a third party does not remove the organization's overall responsibilities for these activities.

2.3 Documentation Requirements

2.3.1 GENERAL

Organizations should have in place a system to control documents and data that relate to the requirements of the QMS.

2.3.2 QUALITY MANUAL

Organizations also should maintain a quality manual that describes the QMS, the quality policy, and the company's commitment to applying the appropriate GDP and quality management standards contained in this chapter. This manual should include the scope of the QMS, reference(s) to supporting procedures, and a description of the interaction between quality management processes.

2.3.3 DOCUMENT CONTROL

Procedures for the identification, collection, indexing, filing, storage, withdrawal, archiving, maintenance, and disposition of controlled documents, including documents of external origin that are part of the QMS, should be established and maintained. Procedures used for the handling and distribution of excipients should be documented, implemented, and maintained. In addition, organizations should establish formal controls relating to procedure approval, revision, and distribution. These controls should provide assurance that the current version of a procedure is used throughout the operational areas and that previous revisions of documents have been removed or withdrawn.

Designated qualified personnel should review documents and subsequent changes to the documents before the latter are issued to the appropriate areas. Documents that influence product quality should be reviewed and approved by the quality unit. Controlled documents may include a unique identifier, date of issue, and revision number to facilitate identification of the most recent document. The department with the responsibility for issuing the documents should be identified. The reasons for changes and the implementation date should be documented.

Electronic documentation should meet the requirements stated above for the document control system. If electronic signatures are used, they should be controlled to provide security equivalent to that given by a hand-written signature. Electronic documents and signatures also may need to satisfy local regulatory requirements.

2.3.4 CONTROL OF RECORDS

Procedures for the identification, collection, indexing, filing, storage, maintenance, and disposition of records should be established and maintained. Records should be maintained to demonstrate achievement of the required quality and the effective operation of the QMS. Records should be legible and clearly linked with the product or process involved. Pertinent third-party quality data also should be an element of these records.

Copyright (c) 2013 The United States Pharmacopeial Convention. All rights reserved.

Entries in records should be clear and indelible and should be made directly after the person performs the activity and then should be signed and dated by the person who made the entry. Corrections to entries should be signed and dated, leaving the original entry legible and with an explanation for the change, especially if this may not be obvious to subsequent reviewers.

Records should be kept for a defined period that is appropriate for the excipient, its use, and its retest or re-evaluation date. Records should be stored and maintained in such a manner that they are readily retrievable and in facilities that provide a suitable environment to minimize deterioration or damage. Electronic records and automated data-capture systems should meet the requirements for controlled records as stated above.

2.3.5 CHANGE CONTROL

Procedures to evaluate and approve all changes, including evaluating the impact of the change on the quality of the excipient, should be established and maintained, for example, changes to:

- Authorized excipient manufacturer or packaging material supplier
- Manufacturing or packaging sites
- Excipient or packaging material specifications
- Test methods and laboratory
- Repackaging, labeling, and storage equipment
- Analytical equipment
- Repackaging, labeling, and storage processes
- Process and equipment changes at the original excipient manufacturer's site (see *Significant Change Guide for Bulk Pharmaceutical Excipients* ⟨1195⟩).

An independent QA group should have the responsibility and authority for the final approval of any changes. The QA group may be part of another operational unit such as regulatory affairs or research and development.

Customers and, if applicable, regulatory authorities (e.g., those responsible for drug master files or certificates of suitability to the *European Pharmacopoeia*) should be notified of significant changes to established production and process control procedures that could affect excipient quality. The original manufacturer and downstream intermediaries (distributors and traders) should have excipient change control agreements in place defining the extent of notification by the original manufacturer in case of a change as described above. Each of the handling parties within the supply chain should have change control agreements to ensure that changes from the original excipient manufacturer are communicated to the end user. This change control agreement is part of the overall contractual agreements between the parties.

2.4 Complaints and Deviations

Customer complaints and information about possible defects should be systematically documented and investigated based on a written procedure with assigned responsibilities that describes the action that will be taken and includes the criteria on which a decision to recall a product should be based. Investigations should be formally conducted and written up in a timely manner to establish if the complaint is justified, to identify the origin or reason for the complaint (e.g., the repackaging procedure, the original manufacturing process, etc.), to identify root cause(s), to define any initial and follow-up action(s), and the method of communication (e.g., to the customer, original excipient manufacturer, authorities, etc.). Complaint records should be retained and regularly evaluated for trends, frequency, and criticality in order to identify possibly needed corrective or preventive actions.

Investigations should identify whether the reported defect is limited to a single batch of material or if other batches must be investigated. If additional batches are implicated, they should be identified and labeled accordingly (e.g., "under quarantine"). As necessary, appropriate follow-up action, possibly including a recall (as outlined in *Section 2.5 Recalls*), should be taken after investigation and evaluation of the complaint. Confirmed serious problems related to product quality (e.g., faulty manufacturing, packaging, or product deterioration) should be communicated upstream to the manufacturer and downstream to customer(s) in case they received material with the same batch number. A similar process should be implemented for the handling of deviations and product defects not identified by a customer complaint.

2.5 Recalls

Those involved in the excipient supply chain should have a system for recalling promptly and effectively any materials known or suspected to be defective. Entities involved in the supply chain should implement written procedures to manage excipient recall (retrieval) in a timely manner. The procedures should:

- Describe how the process of recall (retrieval) should be managed based on the risk involved
- Describe a decision-making process with defined responsibilities
- Define the functions involved in the process (e.g., QA, sales, logistics, senior management, competent authorities, etc.)
- Define the communication process and documentation to parties within the supply channel as well as to regulatory authorities
- Define the steps needed to retrieve the material.

If the original excipient manufacturer does not initiate a recall, it should be informed of the recall. Entities in the supply change should have written procedures for the organization of any recall activity, and these should be regularly checked and updated. All recalled materials should be stored in a secure, segregated (quarantined) area while their disposition is decided. In the event of serious or potentially life-threatening situations, all customers and competent authorities in all countries to which an excipient potentially was distributed should be promptly informed of any intention to recall the excipient. All records should be readily available to the designated person(s) responsible for recalls. These records should contain sufficient information about materials

Accessed from 167.78.4.19 by James Cumbie (ocean22) on Mon Sep 09 15:04:23 EDT 2013

supplied to customers (including exported materials). At regular intervals, QA groups in supply-chain organizations should evaluate the effectiveness of recall arrangements.

2.6 Handling of Nonconforming Materials

Nonconforming materials should be handled in accordance with a procedure that will prevent their inadvertent introduction or reintroduction into the market. They should be stored separately, either physically separated or under electronic control, to prevent their inadvertent introduction into commerce. Firms that conduct recalls should maintain records covering all activities, including destruction, disposal, return, and reclassification, and should perform an investigation to establish whether any other batches also are affected. They should document the investigation and actions taken to prevent recurrence of the problem. As necessary, firms should take corrective measures. Procedures should exist for the evaluation and subsequent disposition of nonconforming products, and the disposition of the material, including downgrading to other suitable purposes, should be documented. Nonconforming materials should never be blended with materials that comply with specifications.

2.7 Audits: Internal, External, and Third-Party

To verify compliance with the principles of GDP for pharmaceutical excipients, firms in the excipient supply chain should perform regularly scheduled internal audits in accordance with approved procedures. Firms should document audit findings and corrective actions and ensure that they are brought to the attention of responsible management. Accepted corrective actions should be completed in a timely and effective manner and should be conducted by designated, qualified individuals. Qualified individuals may be employees of the company, but they must be sufficiently removed from the function under audit so that their independence is not compromised.

Firms should perform external audits in accordance with approved procedures and schedules to assess the capability of suppliers to meet requirements for a product or service, as specified. A response to a questionnaire may be considered in the auditing process but generally does not take the place of an on-site inspection and should not be considered a substitute when an audit is required. Independent auditing organizations can perform third-party audits to determine the level of compliance or conformance to specified standards and regulations (e.g., GMP, GDP, and ISO).

2.8 Contract Activities

Any GDP-related activity that is delegated to another party should be agreed upon in writing in an approved contract with clearly defined responsibilities. The contract should clearly establish which party is responsible for each applicable quality activity. Before entering into an agreement, the contract giver should evaluate the proposed contract acceptor's compliance with GDP as described in this general chapter. The evaluation should include an initial on-site audit of the contract acceptor's premises and quality system, giving special consideration to the prevention of cross-contamination and maintaining traceability. The contract also should include the responsibilities of the contract giver for measures to avoid the entrance of counterfeit or adulterated materials into the distribution chain.

There should be no gaps or unexplained lapses in the application of GDP. The contract acceptor should conduct periodic on-site auditing of contracted distribution activities with regard to the application of GDP by the contract giver. Subcontracting may be permissible under certain conditions, subject to approval by the original contract giver, especially for activities such as sampling, analysis, repacking, and labeling. If subcontracting occurs, the subcontractor should conform to the same GDP standards as the primary contract giver. The subcontractor also should permit an on-site audit by the contract acceptor's quality unit or its designee.[2,3]

2.9 Quality Agreements

Quality agreements are legally binding and are mutually negotiated between parties involved in the supply chain for pharmaceutical excipients. The quality agreement identifies who is responsible for certain quality activities and how quality issues will be resolved between the parties. Although they are intended to address the parties' quality commitments, quality agreements are not designed to take the place of an audit.

Suppliers should have in place quality agreements between themselves and the parties with whom they do business. Original excipient manufacturers should have quality agreements in place with their direct customers and authorized distributors of their products. Distributors should also have agreements with end users and other parties in the supply chain to whom they supply products. All entities in the supply chain should fully understand which entity is responsible for the GDP-related activities (as outlined in this chapter) at each step in the supply chain.

Quality agreements should address the quality systems requirements, but they are not intended to list every element of the quality system. It is not necessary to reiterate agreement on every point of the quality system when the parties state general agreement on the applicable quality standard. Quality responsibilities included in a quality agreement should be those that may require action by one or both parties to the agreement.

A key element that must be defined in the quality agreement is the communication pathways and timing for quality events. Parties must be clear about their responsibility for notifying the next party in the supply channel and for notifying the applicable

[2] WHO. *Good Trade and Distribution Practices for Pharmaceutical Starting Materials*. Geneva; WHO: Technical Report Series, No. 917, 2003, Annex 2. Available at: http://whqlibdoc.who.int/trs/WHO_TRS_917_annex2.pdf (Accessed June 30, 2011).
[3] WHO. *Finished Products: Good Distribution Practices for Pharmaceutical Products*. Geneva; WHO: Technical Report Series 957, 2010, Annex 5. Available at: http://whqlibdoc.who.int/trs/WHO_TRS_957_eng.pdf (Accessed July 7, 2011).

Copyright (c) 2013 The United States Pharmacopeial Convention. All rights reserved.

regulatory authorities in the case of a significant quality event. Many times a decision about who should notify the regulatory authority is a collaborative effort between the parties. Depending on the issue's impact, the timing of these notifications relative to the time of the incident should be specified within the quality agreement.

Both parties to the agreement are responsible for ensuring that the quality agreement is maintained as an accurate document throughout the life of the business relationship. Revisions to this document may be needed as regulatory requirements change, new products are supplied, or a new material risk arises. The parties should maintain a history of the revisions to the quality agreement.

SECTION 3: PREMISES, STORAGE, REPACKAGING, AND STABILITY

3.1 Buildings and Facilities

Organizations should establish operating procedures for the use of buildings and facilities, including the areas discussed below, and firms should consider protective measures to ensure the security of the grounds (e.g., fencing or perimeter walls).

The buildings and facilities used in the storage and handling of excipients should restrict access to allow entrance only by authorized persons to areas used for the manufacture, packaging, and holding. Organizations should take precautions to prevent unauthorized persons from entering limited-access areas. When the status of excipients requires protection from use (e.g., quarantine), organizations must have clearly marked limited-access controls in place, or they should use validated computerized systems to prevent material distribution before approved release.

Buildings should be of adequate size and capacity to allow the orderly flow of materials, proper storage and handling of materials, and appropriately controlled environmental conditions for the final dispatch of excipients into and out of the premises. Buildings should be maintained in a good state of repair. The construction materials must be easily cleanable and maintained, and buildings and facilities should be designed to prevent cross-contamination, product mix-ups, or the accumulation of filth or contaminating materials, particularly when excipients are exposed to the environment. Adequate storage space must be available for excipients that are highly sensitizing or toxic, and dedicated facilities may be necessary. Adequate procedures should be in place to ensure the cleaning, maintenance, and use of buildings and facilities.

Receiving and dispatch bays should be designed to protect the facilities and excipients during loading and unloading during adverse weather conditions. Incoming bay areas should be designed and equipped to allow containers to be cleaned before storage. A pest-control system should be in place to ensure that materials are protected from infestation by insects, rodents, animals, birds, or other vermin. There should be written procedures defining the adequate holding and storage of excipients, including pest-control processes. The pest-control materials must be safe and must be known not to cause contamination. Approved pesticides, insecticides, and rodenticides should be used and documented. Excipients that may contain contamination must be controlled to prevent cross-contamination in holding areas or the spread of contamination to other areas of the facility.

3.2 Warehousing and Storage

Written procedures should describe the receipt, storage, dispatch, and other handling of excipients, as well as the security measures necessary to prevent theft of materials or the introduction of counterfeit or adulterated materials into the supply chain. Buildings should be adequately lighted and should have proper utilities for the intended activities. They should be dry and controlled to appropriate environmental conditions. Buildings and facilities should store excipients in the proper environmental conditions. Temperature-controlled and -monitored storage should be available as required for any building used for holding excipients.

Warehousing and storage conditions for excipients should comply with the monograph specifications, as reflected in the excipient's container label. When specific storage conditions are required for excipients (e.g., temperature and humidity control), they should be provided in a controlled manner, monitored (e.g., by an alarm system or manual control), and recorded. Any automated system(s) used to monitor the environmental conditions for areas where excipients are handled or stored must be validated. An approved document should indicate the location of each environmental monitoring device and the condition(s) it monitors. The locations for these devices or probes should reflect the extreme environmental conditions of the space as determined by an environmental mapping exercise. Excipients that present risks such as fire or explosion should be stored in safe, dedicated areas. Excipients that are sensitizing or toxic should be adequately and appropriately segregated, and warehouse and storage areas should be routinely cleaned, appropriately maintained, and free of pests.

Excipients should be stored in a manner that permits cleaning of the storage area and movement of materials. Pallets used to hold materials should not cause contamination, and required pallet quality and construction materials should be defined in writing. Pallets should be clean and in a good state of repair, and firms should appropriately track supplies to ensure adequate treatment of the wood materials. Wood pallets, if used, should comply with import requirements.

Organizations should have in place written procedures to ensure that the excipient will be supplied within its expiry or retest period and should have adequate controls to prevent the distribution of expired excipients. If no expiry date is applicable, the first-in-first-out principle should be used. Rejected excipients and other materials related to excipient quality (e.g., packaging components) should be so labeled or identified, and controls such as physical or electronic separation should prevent their use pending final disposition. During the warehousing or storage of excipients, any known broken or damaged containers should be withdrawn from usable stock, and the containers should be handled as rejected materials.

Materials quarantined pending a release decision should be labeled or identified (e.g., electronically) to prevent unauthorized use. These materials should be held from use, and written procedures should guide final disposition. There should be written procedures for the cleanup of any spillage to ensure complete removal of any risk of contamination.

Accessed from 167.78.4.19 by James Cumbie (ocean22) on Mon Sep 09 15:04:23 EDT 2013

3.2.1 ENVIRONMENTAL CONTROLS

When excipients require specific storage conditions to preserve their integrity and quality during the retest/re-evaluation or expiry interval, the storage conditions required should be stated on the label, labeling, or other literature, e.g., the Excipient Information Package[4] or COA. Distributors should follow the information and requirements for environmental controls provided by the manufacturer and should provide appropriate controls and monitoring to ensure adherence to the stated storage conditions with appropriate documentation. Distributors also should maintain records to indicate the excipient was stored according to the manufacturer's recommendations and should conduct regular assessments to confirm that designated conditions are met.

If the manufacturer does not indicate specific storage conditions, the distributor should ensure that proper storage conditions are maintained to protect the packaging and labeling. Uncontrolled warehousing conditions vary with geographical location, particularly with latitude. If the excipient is shipped to geographical locations that have storage conditions well outside the conditions used in the manufacturer's stability study or justification for the absence of special storage conditions, then additional studies may be required to show stability at the new conditions. A warehouse-monitoring program should be established if the effects of the new environmental conditions are not known.

Outdoor storage of excipients (for example, bulk materials, flammable materials, acids, or other corrosive substances) is acceptable provided the containers give suitable protection against deterioration or contamination of their contents, identifying labels remain legible, discharge ports have adequate protective closures, and the exteriors of moveable containers are adequately cleaned before opening and use.

3.3 Equipment

Equipment used in bulk transport, repackaging, labeling, testing, or storage of the excipient should be maintained in a good state of repair and should be of suitable size, construction, and location to facilitate cleaning, maintenance, and correct operation. Equipment should be verified before use to ensure that it is constructed, installed, and functioning as required for the excipient. When equipment is located outdoors, there should be suitable controls (e.g., closed systems or protective encasements) to minimize environmental risks to excipient quality.

When possible, dedicated equipment (e.g., bulk trucks, packaging equipment, storage tanks, pipework, hoses, and pumps) should be used in direct contact with the excipient. When non-dedicated equipment is used in direct contact with the excipient, validated cleaning procedures should be applied. A restricted prior-cargo list should be supplied to transport companies in case non-dedicated bulk transport equipment is used. Quality-critical measuring equipment and balances for the handling and testing of the excipient should be of appropriate range and precision. Such equipment should be identified.

3.3.1 EQUIPMENT CONSTRUCTION

Equipment in contact with an excipient should be constructed so that contact surfaces are not reactive, additive, or absorptive and thus do not alter the quality of the excipient. Substances required for operation, such as lubricants or coolants, preferably should not come into contact with excipients and packaging materials. When contact is possible, distributors should use materials of suitable quality that will not affect product quality. The choice of such materials should be justified.

Equipment should be designed to minimize the possibility of contamination from the environment and direct operator contact during activities such as unloading bulk trucks, use of transfer hoses (particularly those used for transfer of excipients), sampling, repackaging, and cleaning. Distributors should consider the sanitary design of equipment in contact with excipients. They should assess the suitability and integrity of seals in order to minimize the risk of contamination. Piping should be appropriately labeled to indicate the content and direction of flow.

3.3.2 EQUIPMENT MAINTENANCE

Documented procedures should be established and followed for maintenance of critical equipment used in the repackaging, labeling, testing, or storage of the excipient. Distributors should maintain records (e.g., logs, computer databases, or other appropriate documentation) of quality-critical equipment use and maintenance. Defective equipment should be removed or appropriately labeled to avoid misuse.

Quality-critical measuring equipment and balances should be controlled on a scheduled basis. This control should include:

- Calibration of instruments or other appropriate verification at suitable intervals, according to an established documented program
- Establishment of the equipment's limits of accuracy and precision
- Provisions for remedial action in the event that accuracy or precision requirements are not met.

Calibration standards should be traceable to recognized national or compendial standards as appropriate. Instruments and equipment that do not meet established specifications should not be used, and an investigation should be conducted to determine the validity of the previous results since the last successful calibration. The current calibration or verification status of quality-critical equipment should be known to users and should be verifiable.

[4] IPEC. *The IPEC Excipient Information Package (EIP): Template and User Guide.* Arlington, VA: IPEC; 2011. http://ipecamericas.org/ipec-store.

Copyright (c) 2013 The United States Pharmacopeial Convention. All rights reserved.

3.3.3 EQUIPMENT CLEANING

Cleaning equipment should be chosen and used so that it cannot be a source of contamination. Cleaning materials should be appropriate for the task, and their selection should be justified. Rotation of sanitizing and cleaning agents should be considered where appropriate. In order to avoid contamination with cleaning products or products previously processed in the equipment, written cleaning procedures should be established for equipment that comes in contact with the excipient. Cleaning procedures should contain sufficient detail to allow cleaning in a reproducible and effective manner. Cleaning and sanitation processes should be recorded, and evidence of their effectiveness should be provided, for example, by:

- Testing the final rinse after cleaning for residues of the previous product
- Checking the equipment after cleaning for residues of the previous product
- Testing each batch for residues of the previous product handled with the same equipment.

3.4 Sampling, Repackaging, and Labeling

To minimize risks associated with repackaging and labeling, appropriate GMPs should be applied (see *Good Manufacturing Practices for Bulk Pharmaceutical Excipients* ⟨1078⟩). For completeness, certain key activities and the necessary precautions are discussed below.

3.4.1 BLENDING, REPACKAGING, AND LABELING

Operations such as combining sublots into a homogeneous batch, repackaging, or labeling are manufacturing processes, and therefore distributors should follow appropriate GMPs (see ⟨1078⟩):

- Processes whereby the excipient's packaging is opened and the excipient is exposed to the environment (for example, transferring excipient from one container to another, including from bulk equipment to storage tanks/silos or from storage tanks/silos into containers) are critical handling steps related to the integrity of the finished product. If only the secondary packaging is modified, operators should take appropriate care to maintain the integrity of the primary packaging and the excipient.
- Excipients may degrade because of exposure to the repackaging atmosphere (e.g., oxygen, humidity, light, and temperature).
- Excipients can be contaminated by foreign matter such as lubricants, cleaning materials, or other substances.
- Transparency to the customer that re-labeling, with or without opening the original excipient manufacturer's packaging, has occurred is critical to representation of the product quality and suitability for use.
- Transparency to the customer of data sources listed on certification documentation (labeling) is critical to representation of the product quality and suitability for use.

3.4.2 REPACKAGING AND LABELING BATCHES

Staff in the excipient supply chain should give special attention to the following points:

- All repackaging and labeling requirements should be defined in written procedures.
- Contamination, cross-contamination, and mix-ups should be avoided by the use of suitable equipment and cleaning procedures and with adequate labeling.
- Environmental conditions and repackaging procedures should be designed to avoid contamination and to maintain the integrity of the excipient during repackaging and labeling.
- Operators should consider the use of filtered air in the repackaging area if necessary for the product. The standard of filtration should be justified.
- Labels should be printed using a controlled process (see *Section 3.4.9 Repackaging and Labeling*).
- Personnel involved in repackaging processes should wear clean protective apparel such as head, face, hand, and arm coverings, as necessary, and should practice appropriate personal hygiene (e.g., hand disinfection following health requirements, health monitoring, and removal of jewelry). Personnel should be trained about special hygiene requirements, and this training should be documented.
- Repackaging areas should be cleaned and sanitized regularly.

Batch numbers should be assigned according to documented procedures. When staff assigns new batch numbers, they should ensure traceability to original batch numbers by proper documentation. Assigning one batch number to containers of different batches that comply with the same specification is an unacceptable practice (see also *Sections 3.4.3 Excipient Batch Homogeneity* and *3.4.4 Blended Excipients*).

- As part of the batch record, a copy of the information on the original labels should be retained (e.g., a photocopy). A sample of the new label also should be kept.
- All repackaging and labeling processes should be designed and carried out to avoid commingling, contamination, and mix-up and to ensure full traceability of the excipients back to the original excipient manufacturer and traceability downstream to the final customer. Responsible personnel should sufficiently record every completed step, along with the name of the operator and the date and time each step was completed, e.g., in the master batch manufacturing record, or by means of computerized systems.

3.4.3 EXCIPIENT BATCH HOMOGENEITY

Mixing to form a homogeneous batch is a manufacturing step and should be defined in a written procedure. A batch can be homogenous only when conforming materials are thoroughly mixed. The conformity of each batch with its specification should be confirmed before it is added. Mixing should always be controlled, and homogeneity should be verified and documented (see *Good*

Accessed from 167.78.4.19 by James Cumbie (ocean22) on Mon Sep 09 15:04:23 EDT 2013

Manufacturing Practices for Bulk Pharmaceutical Excipients ⟨1078⟩). Blending of batches or lots of excipients that individually do not conform to specifications with other lots that do conform (in an attempt to salvage or hide adulterated or expired material) is not an acceptable practice. Only excipients from the same manufacturing site received by a distributor and shown to conform to the same specifications can be mixed. The customer should be informed that the material supplied is a mixture of the manufacturer's batches.

3.4.4 BLENDED EXCIPIENTS

The blending process should be verified to ensure that it does not influence the quality of the excipient. The blended excipient should be tested to ensure conformance to the specification and to provide data for the COA (see *Significant Change Guide for Bulk Pharmaceutical Excipients* ⟨1195⟩). Under certain circumstances and with appropriate controls, a COC can be used if the basis for the claim of conformity is traceable within the document. The blended batch referred to in the new certification document should be traceable to all the original certification documents and batch numbers (see ⟨1078⟩).

3.4.5 CERTIFICATES OF ANALYSIS

The original excipient manufacturer's COA should be retained and made available to the user on request. The batch referred to in the COA delivered to the end user should be traceable to the original excipient manufacturer's COA. Quality documents accompanying deliveries should be subject to an agreement between the distributor and the final customer. For retesting, analytical methods of the original excipient manufacturer or pharmacopeial methods should be applied. When other methods are applied, these should be agreed upon by both parties.

3.4.6 CONTAINER–CLOSURE SYSTEMS

For repackaged material, the repackager is responsible for justifying the shelf life and repackaging conditions. The original manufacturer and the distributer should share information and agree about repackaging conditions and primary packaging materials. They should establish primary container–closure system material and packaging configuration specifications, and they should develop a written procedure that clearly defines packaging for each individual excipient based on its stability.

If the same types of primary container–closure system and packaging configuration are used for repackaging, then the new container–closure system and packaging configuration should be equivalent to that used by the original excipient manufacturer. The repackager and distributor should consider exposure of the excipient to the repackaging environment, and both can rely on the manufacturer's stability evaluation and thus assign the same shelf life for the excipient.

When the repackager's primary container–closure system's packaging configuration differs significantly from that of the original manufacturer [e.g., in terms of desiccants, permeability of the protective barrier layer (which may be either the primary or secondary container–closure system), or the headspace], the repackager must demonstrate that the new system is adequate to protect the excipient from contamination and deterioration for the shelf life (retest or expiration period) defined by the excipient manufacturer. Otherwise, the shelf life defined by the manufacturer cannot be transferred to the repackaged material. The need for stability studies should be confirmed (see *Sections 3.4.14 Stability and Expiration Dates* and *3.5 Retesting and Shelf Life*).

The container–closure system for the pharmaceutical excipient should protect the material from the time of packaging until its final use by the drug product manufacturer. The container–closure system should be designed to help prevent theft or adulteration by counterfeiting.

Storage and handling procedures should protect containers and closures and minimize the risk of contamination, damage or deterioration, and mix-ups (e.g., between containers that have different specifications but are similar in appearance).

3.4.7 RETURNED AND REUSED CONTAINERS

Returned containers may have unknown residues from uses other than the intended one. Therefore, use of new containers is recommended for excipients. If containers are reused, a rationale for the extent of cleaning should be justified and documented for specific excipients and different types of containers. Repackagers should collect evidence that the quality of the material packed is not adversely affected by reuse of containers.

Distributors and customers should have an agreement defining the specific conditions for reuse (e.g., handling, sealing, and cleaning). If returnable excipient containers are reused, all previous labeling should be removed or obliterated.

3.4.8 ENVIRONMENTAL CONTROLS

Environmental controls should ensure that temperature, humidity, and cleanliness of air and equipment are appropriate to avoid any contamination to or deterioration of the excipient. The necessary environmental conditions for the repackaging of each excipient should be defined. Environmental control is a specialist subject, and experts should be consulted (see also *Section 2.6 Handling of Nonconforming Materials*).

3.4.9 REPACKAGING AND LABELING

Repackagers should implement procedures to ensure that the correct quantity of labels is printed and issued and that labels contain the necessary information. Sufficient crosschecks should be in place to ensure proper data transfer. Procedures should be in

Copyright (c) 2013 The United States Pharmacopeial Convention. All rights reserved.

place to avoid mislabeling, and printing and use of labels should be restricted. All labeling operations (e.g., generating, printing, storage, use, and destruction) should be recorded. Labeled containers should be inspected, and surplus labels should be destroyed to avoid any misuse. If labels are not printed immediately before each specific labeling operation, the security of the label stock should be controlled, and access limitations should be defined. Repackaging and labeling facilities should be inspected immediately before use to ensure that all materials that are not required for the next repackaging operation have been removed.

3.4.10 REPACKAGED EXCIPIENTS—ACCOMPANYING DOCUMENTATION

Deliveries of repackaged excipients should be accompanied by information about the original manufacturing site (name and address) and repackaging and labeling sites. This information should be provided in the supplier certification documentation (e.g., COAs) or by other means (see *Section 4.8 Traceability*). The supplier should provide this information to the customer via official communications.

3.4.11 TESTING OF REPACKAGED EXCIPIENTS

Appropriate testing of repackaged excipients should be performed to demonstrate consistent excipient quality. Testing to the complete monograph may not be necessary, but the recipient should test defined key quality parameters that could be affected by the repackaging process. Recipients should consider the manufacturer's recommendations for key quality parameters, and until these tests have been performed the repackaged materials should be kept under quarantine and should be identified as quarantined material. The materials should comply with the defined specifications before they are released for distribution.

Excipient testing and release should be performed under the responsibility of the quality unit and should conform to written specifications and analytical test requirements. Repackagers should ensure that test data are recorded and that results are evaluated before release of the repackaged or transferred excipient.

The excipient cannot be upgraded as a result of any repackaging process. It is unacceptable to upgrade nonpharmaceutical grades to pharmaceutical grades on the basis of conforming analytical results, i.e., by testing to pharmacopeial standards. Pharmaceutical grades can be achieved only when the excipient is originally produced and subsequently processed in accordance with GMPs (see *Good Manufacturing Practices for Bulk Pharmaceutical Excipients* ⟨1078⟩).

3.4.12 OFFICIAL PHARMACOPEIAL METHODS FOR RETESTING

For control of key parameters during repackaging or full retesting of excipients, official pharmacopeial methods or methods validated against the pharmacopeial methods should be used. Otherwise, repackagers should use the original excipient manufacturer's analytical methods. The methods used should be listed on the COA accompanying the excipient or should be made available to the customer by other documents. These documents should also reference any contract laboratory that is used to perform analyses. The COA should clearly identify which tests have not been performed on the repackaged or transferred batch but have been taken from the original manufacturer's COA.

3.4.13 SAMPLING

Excipient sampling must be done in a manner that prevents contamination, and dedicated sampling areas with adequate environmental controls are necessary. Areas for sampling should be designed to allow cleaning of the outside of the container before the container is opened. Adequate cleaning procedures should be in place for the sampling areas. Sampling tools should be dedicated to the sampling area and also to the specific material, or sampling tool cleaning must be validated to ensure no cross-contamination from the tool.

Any container opened for sampling should be marked with the date and name of the person who performs this operation. The amount of sample removed should be recorded.

If excipients are repackaged, processed, or packaged from bulk, retained samples representative of the excipient batch should be kept for at least one year after the expiration or re-evaluation date or for at least one year after distribution is complete, whichever is longer. The minimum sample size should be based on the amount required to perform at least two complete analyses. Sample storage conditions should prevent any contamination or deterioration and should comply with the label storage conditions (see general information chapter, *Bulk Powder Sampling Procedures* ⟨1097⟩).

3.4.14 STABILITY AND EXPIRATION DATES

Excipient stability and expiration dating of excipients are primarily the responsibility of the original manufacturer. Whenever the original manufacturer's packaging is opened, the repacker is responsible for providing evidence that the excipient manufacturer's stability and expiration dating are still applicable.

If a distributor transfers an excipient to another container or repackages it, stability and shelf life (retest or expiry period) should be taken into account. The type of container, primary packaging materials, barrier packaging materials, packaging configuration, environmental exposure during repackaging, and storage conditions at the repackaging site also should be taken into account when the shelf life (retest or expiry period) is defined. The recommended expiration date provided by the original excipient manufacturer should not be extended without demonstrating sufficient stability to justify extended shelf life (retest or expiry period). If shelf life is

Accessed from 167.78.4.19 by James Cumbie (ocean22) on Mon Sep 09 15:04:23 EDT 2013

extended beyond the original manufacturer's recommendation, the type of packaging, storage conditions, and stability-indicating analytical data should be clearly defined, and the repacker assumes the primary responsibility for the extension.

If special storage conditions (e.g., inert gas overlay, protection from light, heat, moisture, etc.) are needed, the restrictions should be indicated on the new labeling (see *Section 3.5 Retesting and Shelf Life*).

3.5 Retesting and Shelf Life

The organization's stated shelf life or retest/re-evaluation interval should be maintained for the excipient. Expiration or shelf life dates indicate the period beyond which the excipient should not be used or distributed. Retest/re-evaluation intervals indicate the period beyond which the excipient must be evaluated to determine continuing acceptability for use. The expiration/shelf life date provided by the original excipient manufacturer should not be extended without documentation from the manufacturer demonstrating sufficient stability to justify an extended shelf life. Such documentation should specify the type of container and storage conditions necessary to make this claim, and the distributor should have documentation that the excipient was stored in the stated container and under the necessary conditions.

Excipients without expiration, retest, re-evaluation, or shelf life dates should be accepted for use only if the manufacturing date can be confirmed and only if the excipient has been held and shipped under conditions that conform to the appropriate standards of GMP or GDP. Distribution of the excipient beyond the retest/re-evaluation period should be done only in consultation with the manufacturer and with the consent of the purchaser or recipient. If the distributor has the capabilities for sampling and performing the manufacturer's specified evaluation, then the distributor can perform the assessment. Sampled lots should be placed under quarantine to prevent shipping during the evaluation.

Distributors who do have capabilities for sampling according to the manufacturer's instructions but do not have testing or evaluation capabilities should send the samples to the manufacturer or a qualified third-party laboratory for retesting/re-evaluation. Excipient lots that conform to the manufacturer's criteria can be released from quarantine, and the distributor's supporting evaluation data should accompany the original excipient manufacturer's data to indicate the excipient's acceptability for use. If the distributor does not have the capability to sample or evaluate the excipient, it should not be shipped to customers beyond the end of the retest/re-evaluation interval. The excipient or a representative sample of the excipient can be returned to the manufacturer or a third party for retesting/re-evaluation. The excipient can be held by the distributor pending further results obtained from the representative sample.

If an excipient is transferred to another container or is repackaged by the distributor, the latter must conduct an assessment of the stability of the excipient to determine if the original excipient manufacturer's information can be carried forward. If the distributor uses the same type of packaging material that provides the same packaged environment (headspace, surface area, closure tightness, etc.) as that used by the original manufacturer and if the transfer or repackaging is performed in a manner that protects the excipient from adverse environmental effects that could affect the stability, then the original excipient manufacturer's shelf life/expiry date or retest/re-evaluation interval can be carried forward. If primary packaging material or barrier packaging material differs from the original excipient manufacturer's primary packaging material or if the packaged environment varies significantly, then an evaluation of the container and its closure system should demonstrate that it is adequate to protect the excipient from deterioration and contamination during the manufacturer's shelf life/expiry date or retest/re-evaluation interval. Otherwise, a stability assessment is necessary to determine the appropriate shelf life/expiry date or retest/re-evaluation interval for the repackaged excipient. Such assessments should be conducted according to the manufacturer's specifications and test methods.

3.6 Expiration Dates

Not all excipients have an expiration date, but if one is assigned it should be displayed on the container and should show the period during which the excipient is expected to remain within specifications if stored properly and after which it should not be used. It is established for every batch by adding the shelf life to the date manufacturing began. The expiration date is based on the type of container and storage conditions, so these parameters should be clearly defined. If special storage conditions are needed (e.g., protection from light, oxygen, heat, humidity, etc.), they should be indicated on the labeling because they could influence usability through the expiration date.[5]

The expiration dates for excipients should be established by documented stability tests or long-term stability data (see *Pharmaceutical Stability* ⟨1150⟩). Occasionally, the expiration date may be established by reference to historical data. Stability involves not only the compendial requirements but also changes in performance properties. Excipient stability tests should determine whether possible degradation, changes in molecular weight and distribution, moisture gain or loss, viscosity changes, microbiological contamination, or other possible changes in excipients could occur when the excipient is stored in a specific container–closure type at specific storage conditions. Stability for repackaged excipients can be found under *Section 3.5. Retesting and Shelf Life*.

3.7 Labels, Icons, and Labeling

3.7.1 LABELS AND ICONS

Label-generating systems and processes should be secure, controlled, and documented. Appropriate verification records should be maintained, and each container should be appropriately identified and labeled. Labels applied to individual small containers should

[5] IPEC. *The IPEC Excipient Stability Program Guide 2010*. Arlington, VA: IPEC; 2010. Available at: http://ipecamericas.org/ipec-store (Accessed July 12, 2011).

Copyright (c) 2013 The United States Pharmacopeial Convention. All rights reserved.

be clear, unambiguous, and permanently fixed in the company's established format. The information on the label should be indelible. Alternative methods can be used for bulk containers/transport and should be justified.

The label may include wording or depict icons to highlight storage and transportation handling requirements and hazards (e.g., avoid dropping, maintain specified environmental conditions, etc.). The use of symbols that are recognized by international organizations is recommended (see *Good Storage and Transportation Practices for Drug Products* ⟨1079⟩). During international distribution, the proper language(s) should be used to ensure that handlers understand the requirements set forth on the label.

3.7.2 LABELING

The labeling (which includes both the label and any accompanying documents) should include at least the following information:

- Name of the excipient, including grade and reference to pharmacopeia, as relevant
- If applicable, the International Nonproprietary Name
- Amount (weight or volume)
- Batch number assigned by the original excipient manufacturer or the batch number assigned by the repacker if the material has been repacked and relabeled
- Retest date or expiry date (as applicable)
- Any specified storage conditions, as applicable
- Handling precautions, where necessary
- Identification of the original manufacturing site as agreed with the pharmaceutical customer (see *Section 4.8 Traceability*)
- Name and contact details of the suppliers.

SECTION 4: RETURNED GOODS, DISPATCH, TRANSPORT, IMPORTATION, ADULTERATION, AND TRACEABILITY

4.1 Returned Goods

4.1.1 GENERAL

Return of goods by users to suppliers should be reviewed on a case-by-case basis. The distributor should facilitate a root cause analysis and investigation of complaints.

NOTE: Users should document the reason(s) for return of goods to the supplier.

Before returning the goods, if the user identifies unacceptable product quality the user should provide the supplier with the user's supporting documentation, such as tests and investigation results. If requested, the user also should provide product samples used for tests and investigations. The supplier should be provided an opportunity to conduct thorough investigations to confirm the validity of the user's quality complaint. While the investigation proceeds, the user should quarantine the material in accordance with internal standard operating procedures and should store the material in an area specifically designated for returns, with limited access to operations, and well-separated from incoming or released raw materials. The user should not reject the materials without supplier confirmation of quality issues.

Goods returned by the user because of excess inventory or other causes unrelated to quality can re-enter commerce within the specified shelf life, provided conditions of storage, transportation, and container integrity have been thoroughly reviewed by the supplier and the quality of the excipient has not been compromised in any way. A formal documented review of each returned container and container tamper-evidence device should be done to verify that these match the container configuration when the materials left the supplier's facility.

If the user opens a commercial packaging container for sampling or investigation (related or unrelated to quality issues) and whether any material was taken out or not, each container should be clearly labeled *Opened*. Written documentation should be provided to the supplier confirming that the container(s) were opened and resealed according to GMPs and describing the reasons for opening, amount withdrawn, and how the pack/container was resealed. Documentation of returned goods should contain a detailed description of all such events including repackaging. Returned excipient containers opened by the user should be clearly identified as such and should not be released as pharmaceutical excipients. In exceptional cases, the material can be released as excipient-grade product if a documented thorough investigation shows no risk of product contamination or deterioration. The quality department should release this material.

Users and suppliers should maintain records of all returned goods, including the product name (trade name and chemical name), batch or lot number, reason for the return, quantity returned, and investigation documentation when applicable. In addition, the supplier should record the final disposition of the material. If returned excipients have been held, stored, or shipped under conditions that could compromise product quality (including ingredients, containers, or labeling), the manufacturer should destroy the excipients. Exceptionally, manufacturers can release the excipients if their examination, testing, and investigations prove that the material meets suitable standards of identity, quality, and purity and that GMPs and GDPs have not been compromised.

Accessed from 167.78.4.19 by James Cumbie (ocean22) on Mon Sep 09 15:04:23 EDT 2013

4.1.2 DISPOSITION OF RETURNED GOODS

The excipient manufacturer's quality unit should assess returned product. The options are:

- Return to commerce
- Regrade to a less stringent standard such as technical or industrial grade (non-GMP use)
- Destroy
- Reprocess.

Only containers that have not been opened should be considered for return to commerce without further action.

If the quality assessment of returned goods leads to their final destruction and if associated batches are potentially implicated, an appropriate investigation should be conducted and documented to show that the quality of the associated batches is not affected.

4.1.3 REPROCESSING

Returned goods may be reprocessed according to documented procedures approved in advance by the quality unit. Written procedures should define conditions for holding, testing, and acceptance of the material for reprocessing, as well as procedures for reprocessing, testing, and release of reprocessed material. Reprocessed material should meet appropriate standards, specifications, and characteristics and must be accompanied by a new COA that contains lot number, test results, monograph compliance information, and new release and retest dates. Manufacturers must clearly distinguish the reprocessed material in batch records that are specific to the reprocessed batch, including a new batch or lot number and other appropriate information. The reprocessing event need not be specified on the COA, but the original excipient manufacturer is responsible for ensuring that the reprocessing is performed in compliance with GMPs and that the material meets the established identity, quality, and purity criteria before the material enters commerce. Documentation must establish that the reprocessed material is at least as stable as the original material. Reprocessing is a manufacturing step, and the requirements of *Good Manufacturing Practices for Bulk Pharmaceutical Excipients* ⟨1078⟩ apply. The requirements of ⟨1078⟩ apply only to those intermediate supply chain entities that undertake reprocessing.

4.2 Shipping and Transportation

4.2.1 SHIPPING

The supplier (the manufacturer or distributor) of pharmaceutical excipients should ensure the integrity of the pharmaceutical excipient is maintained by the appropriate storage and transport conditions as described in product labeling. After training, staff should follow written procedures for shipping pharmaceutical excipients. These procedures include the requirement to follow the recommended storage and transportation requirements including temperature, humidity, or other special handling precautions.

Actions should be documented when they are performed. Shipping records for pharmaceutical excipients should provide for the following information:

- Date of shipment
- Name and address of the entity that accepted the materials for the transportation
- Mode of transportation
- Name, address, and status of the consignee
- Material name
- Quantity shipped
- Batch number and expiry date
- Required storage and transport conditions (refrigeration, freezing, or controlled room temperature required)
- Shipping code or identification number of the delivery order.

When regulatory actions such as FDA Field Alerts or drug product recalls occur, the excipient handler must be prepared to act promptly. Shipping documentation must be sufficient to allow adequate handling of any excipient associated with regulatory action. When reasonable, the shipping schedule for excipients should be documented, and responsibilities can be enumerated in a quality or collaborative agreement between entities to show ownership in the supply chain (Entity A to Entity B; Entity B to Entity C; etc.—see *Section 4.4 Packaging: Tamper-Evident Seals*). The buildings and facilities used to ship materials should be appropriate for their intended use in the storage and handling of excipients (see *Section 3.1 Buildings and Facilities*).

Before loading materials, shippers should inspect the container and vehicle to ensure cleanliness and other consignments (if the shipment is a part load) to ensure no form of contamination is likely to occur. This inspection should be documented according to a written procedure. Materials should not be offloaded into other containers or vehicles without the written permission of the material owner or consignee.

4.2.2 TRANSPORTATION

Materials should be transported in a manner that will ensure the maintenance of controlled conditions as specified by the manufacturer. The transport process should not adversely affect the materials or integrity of the packaging. The supplier of transport services must be provided with the required information in order to maintain specified conditions.

The pharmaceutical excipient manufacturer or supplier should agree with the purchaser for arranging transportation. If temperature-controlled transportation is contracted, the shipper must have a mechanism for noting and reporting temperature excursions. Labeling on containers and transportation documents should detail the environmental conditions in a manner that provides the

Copyright (c) 2013 The United States Pharmacopeial Convention. All rights reserved.

transporter or receiver with knowledge and immediate identification of these conditions, if required. The responsibility for ensuring that the proper storage conditions are met rests with each entity that handles, stores, or transports the materials.

Pharmaceutical excipients should be stored and transported in such a way that the identity and integrity of the material are retained, the material does not contaminate and is not contaminated by other materials, and adequate precautions are taken against spillage, breakage, misappropriation, and theft. The required storage conditions for pharmaceutical excipients should be maintained within acceptable limits during transportation.

Excipients that are potentially dangerous because of the risk of fire or explosion (e.g., combustible liquids, solids, and pressurized gases) should be stored and transported in safe, dedicated, and secure areas, containers, and vehicles. In addition, applicable international agreements and federal regulations should be followed.

4.3 Tampering or Damaged Materials

Materials that are suspected of being tampered with or damaged must be quarantined immediately, and the manufacturer or distributor should be notified. The manufacturer or supplier of excipients should ask the transporter to return the material to the site of shipment origin if tampering or damage is suspected or confirmed. The supplier should make every effort to prevent these materials from being used until an investigation is completed and the final disposition of the material is determined. Written procedures should guide treatment of excipients that have been tampered with or the identification and handling of damaged material.

4.4 Packaging: Tamper-Evident Seals

A tamper-evident package has one or more indicators or barriers to entry that, if breached or missing, can reasonably be expected to provide visible evidence that tampering has occurred. To reduce the likelihood of successful tampering and to increase the likelihood that any breach will be discovered, the package should be distinctive by design or should employ one or more indicators of or barriers to entry. The term *distinctive by design* means that the packaging cannot be duplicated with commonly available materials or by commonly available processes.

A tamper-evident package may involve an immediate container–closure system in direct contact with the contents (primary packaging), a secondary container–closure system not in direct contact with the contents (secondary packaging), or any combination of systems intended to provide visual evidence of package integrity. For primary packaging in direct contact with the excipient (e.g., paper bags), any leak or break should be considered tampering even if the leak or tear is simply accidental damage.

Visual examination of the packaging at each stage in the supply chain should provide evidence of repackaging or tampering with commercial packaging. In addition, the manufacturer's name and address, net weight of the material, material name, batch or packaging number, date of manufacture, and date of retest should be identified on a packaging label. The label should be prominently placed on the package and should be unaffected if the tamper-evident feature of the package is breached or missing.

The tamper-evident feature for excipient packaging should be designed so that it remains intact when handled in a reasonable manner from the time of packaging at the site of manufacture and throughout the supply chain—including but not limited to warehouse storage during various phases of the supply chain, transport, distribution, receipt, and storage at the user's facility until use for drug product manufacture.

The manufacturer should communicate tamper-evident features to the downstream members of the supply chain. If the latter observe any evidence that the tamper-evident feature or other part of the package has been compromised in any way, they should quarantine the material immediately and inform the supplier. Appropriate arrangements should be made with the supplier to return the material promptly with a description of the packaging breach. The user should ensure adequate protection of the breached packaging during shipment to the supplier and can send photographs of the breached packaging to aid the supplier's investigation.

The supplier is responsible for the integrity of packaging, including but not limited to its tamper-evident features, until ownership of the commercial packages is transferred to the user. Material returned because of breach in packaging should be thoroughly reviewed and investigated by the supplier. The material should not be returned to commerce until the supplier has established that the integrity, identity, quality, purity, and safety of the excipient have not been compromised. The documentation requirement should comply with GMP expectations as well as elements of documentation and investigation suggested in *Section 4.1 Returned Goods*.

4.5 Where Ownership Begins

The excipient user is responsible for purchased materials throughout the supply chain. The supply chain qualification is documented by audits and COAs for all parties involved in trade and distribution of the materials. Such supply chain qualification and documentation supports the Excipient Pedigree and ownership of the excipient. The pedigree includes documentation of suitable excipient GMPs applied by the excipient manufacturer and suitable GDPs.

Ownership of the materials begins with the original excipient manufacturer and transfers to an intermediary or customer according to agreed-upon terms for insurance costs, transportation, and risk assumption. Such agreements are defined according to International Chamber of Commerce terms (Incoterms).[6] Incoterms are a series of international sales terms that are used to divide transaction costs and responsibilities between buyer and seller and reflect state-of-the-art transportation practices.

[6] International Chamber of Commerce. Incoterms. http://www.iccwbo.org/incoterms (Accessed June 6, 2011).

Accessed from 167.78.4.19 by James Cumbie (ocean22) on Mon Sep 09 15:04:23 EDT 2013

4.6 Adulteration and Economically Motivated Adulteration

4.6.1 ADULTERATION

Adulteration is defined in the FD&C Act and 21 CFR in Sections 501(a)(2)(B) and 501(b)[7] and 21 CFR 211 for finished pharmaceuticals and Sections 402(a)(3) and (4)[8] and 21 CFR 110 for human food, respectively. These laws and regulations establish the minimum current GMP (cGMP) necessary to prevent adulteration for food products and finished pharmaceuticals, respectively. Excipients are derived from many sources, so end users must establish raw material specifications to ensure suitability for the safety and efficacy of the final product. Excipients for pharmaceutical use must be manufactured under appropriate GMPs and must meet the required chemical and physical specifications. In addition to specifications, excipient manufacturers and users have generally agreed quality attributes and limits defined by regulatory agencies, common industry practices, and pharmacopeial expectations. Adulteration or contamination of the products can be monitored and detected by many means including, but not limited to, compliance with these predefined quality expectations.

Adulteration occurs when any possible contamination of a product takes place, e.g., from foreign materials or undesirable microorganisms. The problem of adulteration can be addressed by standard practices supporting cGMPs, such as HACCP, Standard Operating Procedures, and staff training to control product safety and purity. This type of adulteration is the unforeseeable and unintentional type that can be controlled and, at worst, detected before the product leaves the manufacturer's site.

FDA specifies that a product can be considered adulterated when conditions *may* lead to adulteration because it is impossible to test every product for every conceivable contaminant. The safety and purity of substances require that manufacturers should build quality controls into the process rather than relying on QC testing.

4.6.2 ECONOMICALLY MOTIVATED ADULTERATION

Compared to simple adulteration, economically motivated adulteration is a much more significant problem because it requires a willful and knowing violation of regulations and standards designed to protect end user safety. It is the deliberate adulteration of an excipient for economic gain. Economically motivated adulteration can occur when a lower-cost material is substituted for a material of higher cost. Every participant in the supply chain should take all reasonable precautions to prevent economically motivated adulteration.[9]

4.7 Importation

Excipients manufactured outside the United States are subject to US FDA and US Customs and Border Protection (CBP) regulations for importation into the United States. The Bioterrorism Act (Public Health Security and Bioterrorism Preparedness and Response Act of 2002, Title III—Protecting Safety and Security of Food and Drug Supply)[10] has further formalized the requirements for importation of foods and drugs into the United States.

Overseas manufacturers of excipients used in drugs, food, and dietary supplements intended for human or veterinary use who intend to export products into the United States are required to follow the FDA, CBP, and Bioterrorism Act regulations. A streamlined process for the importation of excipients used in pharmaceuticals, food, and dietary supplements must be followed and implemented before the imports are allowed into the United States.

The manufacturing facilities and the manufacturers who produce the excipients should be registered with FDA. An FDA registration number is required for importation. In addition, FDA requires information about Prior Notice (PN) of Imports. Upon receipt of the information, FDA grants a PN confirmation number. FDA must confirm PN before the products are shipped, and the PN confirmation number must appear on the customs declaration that accompanies the package. PN information can be submitted electronically to FDA's Prior Notice Systems Interface (PNSI), a free Internet application that allows facilities to provide information regarding the expected imports. PN information also can be submitted via CBP's Automated Commercial System (ACS), a system that processes imports and obtains information needed to make decisions regarding articles entering the United States.

CBP processes imports of all goods for entry into United States, including but not limited to pharmaceuticals, food, and dietary supplements. CBP inspects but does not release products regulated by the FD&C Act and delegates the final release responsibility at the port of entry to the FDA for such materials. After reviewing the PN information, FDA may determine that the regulated articles should not be allowed into the United States or may allow conditional import of articles subject to testing and release at the port of entry. In addition, during FDA review at the port the regulated articles must meet all requirements of the FD&C Act and 21 CFR before they are released by FDA to the importer.

Importers of record (individuals or companies) for excipients can contract with a broker to transmit PN information and other documents for them. In this case, the submitter is the person responsible for providing the information, but the broker is the transmitter. Brokers are licensed private individuals or companies regulated by CBP and who aid importers and exporters in moving

[7] FD&C Act. Chapter V: Drugs and Devices. Sec. 501. [21 USC §351] Adulterated Drugs and Devices. http://www.fda.gov/RegulatoryInformation/Legislation/FederalFoodDrugandCosmeticActFDCAct/FDCActChapterVDrugsandDevices/ucm108055.htm.
[8] FD&C Act. Chapter IV: Food. Sec. 402. [21 USC §342] Adulterated Food. http://www.fda.gov/RegulatoryInformation/Legislation/FederalFoodDrugandCosmeticActFDCAct/FDCActChapterIVFood/ucm107527.htm (Accessed June 6, 2011).
[9] FDA. Public Meeting on Economically Motivated Adulteration. 2009. http://www.fda.gov/NewsEvents/MeetingsConferencesWorkshops/ucm163619.htm (Accessed June 6, 2011).
[10] FDA. *Guidance for Industry: Questions and Answers Regarding the Interim Final Rule on Prior Notice of Imported Food, (Edition 2); Availability.* 2004. http://www.gpo.gov/fdsys/pkg/FR-2004-05-03/pdf/04-10023.pdf (Accessed June 6, 2011).

Copyright (c) 2013 The United States Pharmacopeial Convention. All rights reserved.

merchandise through CBP. Brokers provide the proper paperwork and payments to CBP for clients and charge a fee for this service. Before brokers apply for a license, they must pass the customs broker examination.

FDA currently uses its Operational and Administrative System for Import Support (OASIS)[11] for making its admissibility determinations to ensure the safety, efficacy, and quality of the foreign-origin products for which FDA has regulatory responsibility under the FD&C Act. OASIS is integrated with CBP's ACS and FDA's PNSI systems to receive information related to imported articles.

US Customs and FDA storage areas at the Port of Arrival may not strictly be in compliance with storage conditions required for certain excipients. Importers of record and brokers who represent importers must ensure that the products are released from Customs and FDA inspection as soon as possible. If release is delayed, FDA generally allows removal by Customs and FDA and quarantine in the importer's warehouse until release. FDA staff who review imports at the port of entry are trained to understand that pharmaceutical excipients must be stored under defined conditions. The manufacturer, the importer on record in the importing country, and brokers have a responsibility in working with Customs and FDA staff to ensure that the storage conditions do not adversely affect product quality during quarantine and review.

4.8 Traceability

4.8.1 TRACEABILITY

The pedigree of the excipient should be tracked from the manufacturer's storage through the final delivery to customers by means of recorded identification. The entire supply chain should provide full traceability (for example, via lot numbers and shipping documents) in order to allow fast and efficient investigation of any quality issue or product recall. Every entity in the supply chain also should take responsibility from the preceding supplier and pass the product to subsequent intermediaries down to the end user. Therefore, the original excipient manufacturer and subsequent handlers should always be traceable, and the information should be available both downstream and upstream in the supply chain. All parties to the excipient supply chain should ensure that the excipient is strictly handled according to GDP at every stage.

To ensure the integrity of the supply chain, intermediaries should use contracts, agreements, inspections, and audits downstream and upstream to monitor compliance with GDP principles. When multiple entities constitute the supply chain for each single batch of excipient, each entity should provide its own supplier's certification documentation (see *Appendix: Definitions and Acronyms*) that represents their manufacture or receipt of the excipient batch through release to the subsequent entity. The total of each entity's supplier certification documentation should represent the entire supply chain from original excipient manufacture through use in the final drug product.

4.8.2 TRACEABILITY-RELATED DOCUMENTS

To ensure traceability, all entities in the supply chain should have clear definitions about the shipping documents to be expected with every delivery. At a minimum the documents for every delivery should provide the following information:

- Name and grade of the excipient
- Lot number(s) assigned by the original excipient manufacturer (see *Section 3.4.2 Repackaging and Labeling Batches*)
- Quality and compliance data (e.g., COA) of the excipient
- Origin of the excipient (manufacturer and manufacturing site)
- Original excipient COA(s) (see *Section 3.4.5 Certificates of Analysis*)
- Entity and site of repackaging (when performed), including opening or relabeling the original excipient manufacturer's packaging for any purpose
- Date of shipment and carrier
- Consignor and consignee.

A copy of the COA also should accompany the shipment (see *Significant Change Guide for Bulk Pharmaceutical Excipients* ⟨1195⟩ and *Bulk Pharmaceutical Excipients—Certificate of Analysis* ⟨1080⟩).

In the event of repackaging from the original excipient manufacturer's package into another container (including any breach or labeling that does not result in a new package), the identity and address of the repackaging entity should be included in the shipping documents.

Additional data resulting from analyses conducted by entities other than the original excipient manufacturer should be provided, along with a clear indication of the source. Quality documents should facilitate traceability back to the manufacturer with contact information. The COA issued by the manufacturer should indicate which results were obtained by testing the original material and which results were obtained by other means. A distributor should not change the original title and data of the COA or other quality documents. Whenever possible, the original excipient manufacturer's documentation should be used, or data transcription should be verified. The original manufacturing site should be identified on the COA.

If any lot mixing is carried out, COAs from manufacturers are no longer valid, and the distributor should perform analyses in its own laboratory or at an approved and qualified contract laboratory. The distributor should supply a COC, and if the blended lot has not been retested the distributor should inform the customer that the material is a mixture of different original excipient manufacturers' lots, provided that all other repackaging and storage activities are carried out according to GDP.

[11] FDA. Operational and Administrative System for Import Support (OASIS). 2009. http://www.fda.gov/ForIndustry/ImportProgram/AdmissibilityDeterminationsforShipmentsofForeign-originOASIS/ucm077691.htm (Accessed June 6, 2011).

Accessed from 167.78.4.19 by James Cumbie (ocean22) on Mon Sep 09 15:04:23 EDT 2013

SECTION 5: EXCIPIENTS USED IN PHARMACY COMPOUNDING

Pharmacy compounding is defined in *USP* general chapter *Pharmaceutical Compounding—Nonsterile Preparations ⟨795⟩*. In certain instances *USP–NF* handles compounded preparations differently than commercially manufactured lots. For example, expiration dates are assigned to commercially manufactured products, and beyond-use dates are assigned to compounded preparations (see *General Notices 10.40.100.1 Compounded Preparations*). A similar situation is needed for bulk pharmaceutical Excipients as not all excipients that are useful in compounding are listed in official compendia (see *Pharmaceutical Compounding—Nonsterile Preparations ⟨795⟩*).

State boards of pharmacy regulate pharmacy compounding. USP standards are provided in *Pharmaceutical Compounding—Nonsterile Preparations ⟨795⟩*, *Pharmaceutical Compounding—Sterile Preparations ⟨797⟩*, and *Quality Assurance in Pharmaceutical Compounding ⟨1163⟩*.

APPENDIX: DEFINITIONS AND ACRONYMS

Acceptance Criteria: The specifications and acceptance or rejection limits—such as acceptable quality level or unacceptable quality level with an associated sampling plan—that are necessary for making a decision to accept or reject a lot or batch of raw material, intermediate, packaging material, or excipient.

ACS: Automated Commercial System.

Adulterated Material: A material that either has been contaminated with a foreign material or has not been manufactured using GMP. This does not pertain to a material that simply does not meet physical or chemical specifications.

Audit: An assessment of a system or process to determine its compliance with the requirements of a particular standard of operation. See also External, Internal, and Third-Party Audit.

Batch (Lot): A defined quantity of excipient processed which can be expected to be homogeneous. In a continuous process, a batch corresponds to a defined portion of the production based on time or quantity (e.g., vessel's volume, one day's production, etc.).

Batch Number (Lot Number): A unique and distinctive combination of numbers and/or letters from which the complete history of the manufacture, processing, packaging, coding, and distribution of a batch can be determined.

Batch Process: A manufacturing process which produces the excipient from a discrete supply of raw materials processed through discrete unit operations in one mass.

Batch Record: Documentation that provides a history of the manufacture of a batch of excipient.

Blending (Mixing): Intermingling different conforming grades into a homogeneous lot.

Broker: An entity that acts as an intermediary between a buyer and a seller of products or services. Brokers neither buy nor take possession of the products or services.

Calibration: The demonstration that a particular instrument or measuring device produces results within specified limits by comparison with those produced by a reference or traceable standard over an appropriate range of measurements.

CBP: Customs and Border Protection.

CEP (Certificate of Suitability to the *European Pharmacopoeia*): Certification granted to individual manufacturers by the European Directorate for the Quality of Medicines when a specific excipient or active ingredient is judged to be in conformity with a *European Pharmacopoeia* monograph.

CFR: Code of Federal Regulations.

CFR (Cost and Freight, Named Destination): (Incoterm) Seller must pay the costs and freight to bring the goods to the port of destination. However, risk is transferred to the buyer once the goods have crossed the ship's rail (maritime transport only).

cGMP: Current good manufacturing practices.

CIF (Cost, Insurance, and Freight, Named Destination): (Incoterm) Same as CFR except that the seller must, in addition, procure and pay for insurance for the buyer.

CIP (Carriage and Insurance Paid, Named Destination): (Incoterm) The containerized transport or multimodal equivalent of CIF. Seller pays for carriage and insurance to the named destination, but risk passes when the goods are handed over to the first carrier.

Closed-Container Distributor (Pass-Through Distributor): A distributor who sells only products that are tested, packaged, and sealed in the containers provided by the original manufacturer.

Closed System: A system that is isolated from its surroundings by a boundary so that no material can be transferred across it.

COA (Certificate of Analysis): A document that reports the results of a test of a representative sample drawn from the batch of material that will be delivered.

COC (Certificate of Conformance): A document that certifies that the supplied goods or service meets the required specifications. Also known as Certificate of Conformity and Certificate of Compliance.

Commissioning: The introduction of equipment for use in a controlled manner.

Compounding: The preparation, mixing, assembling, altering, packaging, and labeling of a drug, drug-delivery device, or device in accordance with a licensed practitioner's prescription, medication order, or initiative based on the practitioner/patient/pharmacist/

Copyright (c) 2013 The United States Pharmacopeial Convention. All rights reserved.

compounder relationship in the course of professional practice (defined in *USP* general chapter *Pharmaceutical Compounding—Nonsterile Preparations* ⟨795⟩).

Consignee/Consignor: Person or firm (usually the seller) who delivers a consignment to a carrier for transportation to a consignee (usually the buyer) named in the transportation documents.

Contamination: The undesired introduction of impurities of a chemical or microbiological nature or foreign matter into or onto a raw material, intermediate, or excipient during production, sampling, packaging or repackaging, storage, or transport.

Continuous Process: A manufacturing process that continually produces the excipient from a continuous supply of raw material.

Contract Giver: A person or organization letting a contract.

Contract Acceptor: A person or organization accepting the terms of a contract and thereby agreeing to carry out the work or provide the services as specified in the contract.

Critical: A process step, process condition, test requirement, or other relevant parameter or item that must be controlled within predetermined criteria to ensure that the excipient meets its specification.

Critical to Quality: See *Quality, Critical*.

Cross-Contamination: Contamination of a material or product with another material or product.

Customer: The organization that receives the excipient once it has left the control of the excipient manufacturer; includes brokers, agents, and users.

Deviation: Departure from an approved instruction or established standard.

Distributor: An entity that buys products from a manufacturer, takes possession of those products, and resells them to another party or parties. An essential characteristic of a distributor is the order of these transactions. Distributors buy products (i.e., hold inventory) before making sales.

Drug Master File (DMF): Detailed information about the manufacture of an excipient that is submitted to the US FDA.

Drug (Medicinal) Product: The dosage form in the final immediate packaging intended for marketing.

Drug Substance: Any substance or mixture of substances that is intended for use in the manufacture of a drug product and that, when used in the production of a drug, becomes an active ingredient of the drug product. Such substances are intended to furnish pharmacological activity or other direct effect in the diagnosis, cure, mitigation, treatment, or prevention of disease, or to affect the structure or any function of the body of humans or animals.

Economically Motivated Adulteration: The fraudulent, intentional substitution or addition of a substance in a product for the purpose of increasing the apparent value of the product or reducing the cost of its production for economic gain.

Electronic Signature: A computer data compilation of any symbol or series of symbols, executed, adopted, or authorized by an individual and intended to be the legally binding equivalent of the individual's handwritten signature.

Excipient: Any substance, other than the active pharmaceutical ingredient or drug product, that has been appropriately evaluated for safety and is included in a drug delivery system to aid the processing of the drug delivery system during manufacture; to protect, support, or enhance stability, bioavailability, or patient acceptability; to assist in product identification; or to enhance any other attribute of the overall safety and effectiveness of the drug delivery system during storage or use.

Excipient Pedigree: Includes documentation of suitable excipient good manufacturing practices applied by the excipient manufacturer and suitable good distribution practices. See IPEC *Excipient Pedigree White Paper*.

External Audit: (See also *Audit*, *Internal*, and *Third-Party Audit*.) An audit carried out typically on behalf of an excipient manufacturer's customer by a person or organization that is not the manufacturer or the customer.

Expiry (Expiration) Date: The date designating the time during which the excipient is expected to remain within specifications and after which it should not be used.

FCA (Free Carrier, Named Place): The seller hands over the goods, cleared for export, into the custody of the first carrier (named by the buyer) at the named place. This term is suitable for all modes of transport, including carriage by air, rail, road, and containerized/multimodal transport (also called *roll on–roll off*).

FDA: Food and Drug Administration.

FD&C Act: Food, Drug, and Cosmetic Act.

FOB (Free on Board, Named Loading Port): The classic maritime trade term according to which the seller must load the goods on board the ship nominated by the buyer, and cost and risk are divided at ship's rail. The seller must clear the goods for export. The purchaser is then responsible for all further costs associated with transport, importation, and storage until the shipment reaches its destination. The term also is applied to air transport when the seller is not able to export the goods according to the time schedule detailed in the letter of credit. In this case the seller allows a deduction equivalent to the carriage by ship from the air carriage. FOB also can be qualified in other ways. For example, *FOB Factory Gate* means that title and responsibility change as soon as the shipment leaves the supplier's premises.

Forwarding Agents (Freight Forwarders): Agents who assist other organizations or individuals in moving cargo to a destination and are familiar with the import and export rules and regulations of their own and foreign countries, the methods of shipping, and the documents related to foreign trade.

Freight Forwarder: See *Forwarding Agent*.

Accessed from 167.78.4.19 by James Cumbie (ocean22) on Mon Sep 09 15:04:23 EDT 2013

GDP: Good distribution practices.

GMP: Good manufacturing practices.

Headspace: The volume left at the top of an almost-filled container before sealing.

HACCP (Hazard Analysis Critical Control Point): Hazard Analysis and Critical Control Points has seven principles established by the National Advisory Committee for Microbiological Criteria for Foods to control product safety.

Importer: Either the US owner or consignee at the time of entry into the United States or the US agent or representative of the foreign owner or consignee at the time of entry into the United States who is responsible for ensuring that goods offered for entry into the United States are in compliance with all laws affecting the importation.

Impurity: A component of an excipient that is not the intended chemical entity or a concomitant component but is present as a consequence of either the raw materials used or the manufacturing process and is not a foreign substance.

Independent: In the context of internal audits, the quality of being free from any influence, economic or otherwise, from the group, department, or organization under audit.

In-Process Control: Checks performed during production in order to monitor and if necessary to adjust the process to ensure that the material conforms to its specifications. The control of the environment or equipment also can be regarded as a part of in-process control.

In-Process Control/Testing: Checks performed during production to monitor and, if appropriate, to adjust the process to ensure that the intermediate or excipient conforms to its specification.

Intermediate: Material that must undergo further manufacturing steps before it becomes an excipient.

Internal Audit: An audit conducted by an employee of the organization or by an individual from outside the organization, but on behalf of the organization, to determine the effectiveness of a system. (See: *Audit*, *External Audit*, and *Third-Party Audit*).

International Nonproprietary Name: International Nonproprietary Names (INN) facilitate the identification of pharmaceutical substances or active pharmaceutical ingredients. Each INN is a unique name that is globally recognized and is public property. A nonproprietary name also is known as a generic name.

ISO: International Organization for Standardization.

Lot: See *Batch*.

Labeling: The affixing to a container or vessel of a tag or document that contains information about that container and its contents.

Manufacturer/Manufacturing Process: All operations of receipt of materials, production, packaging, repackaging, labeling, re-labeling, quality control, release, and storage of excipients and related controls.

Master Production Instruction (Master Production and Control Record): Documentation that describes the manufacture of the excipient from raw material to completion.

Material: A general term used to denote raw materials (starting materials, reagents, and solvents), process aids, intermediates, excipients, packaging, and labeling materials.

Nonconforming Material: A material that is deficient in a characteristic, product specification, process parameter, record, or procedure that renders its quality unacceptable, indeterminate, or not according to specified requirements.

OASIS: Operational and Administrative System for Import Support.

Original Excipient Manufacturer: Organization responsible for manufacturing, under appropriate GMPs, the excipient(s) distributed and addressed by this chapter.

Packaging/Repackaging Distributor: A distributor who transfers products from the original packaging or transport vessel(s) provided by the original manufacturer into alternative packaging and sells the products in the alternative packages. See *Distributor* and *Repackager*.

Primary Container–Closure System: The packaging components that come into direct contact with the excipient in the closed, sealed package during storage and transport.

Packaging Material: A material intended to protect an intermediate or excipient during storage and transport.

Packaging: The container and its components that hold the excipient for storage and transport to the customer.

Pass-Through Distributor: See *Closed-Container Distributor*.

PN: Prior notice.

PNSI: Prior Notice Systems Interface.

Primary, Secondary Packaging: See *Packaging/Repackaging Distributor* and *Primary Container—Closure System*. Packaging materials which do not come into contact with the excipient during the normal course of storage and transport of the excipient.

Production: Operations involved in the preparation of an excipient from receipt of raw materials through processing and packaging of the excipient.

QbD (Quality by Design): A systematic approach to pharmaceutical development that begins with predefined objectives and emphasizes product and process understanding and process control based on sound science and quality risk management. It means designing and developing products and manufacturing processes to ensure a predefined quality.

Copyright (c) 2013 The United States Pharmacopeial Convention. All rights reserved.

QMS: Quality management system.

Quality Assurance (QA): The total of the organized arrangements made to ensure that all excipients are of the quality required for their intended use and that quality systems are maintained. See *Quality Unit*.

Quality Control (QC): Checking or testing that specifications are met. See *Quality Unit*.

Quality, Critical: Describes a material, process step or process condition, test requirement, or any other relevant parameter that directly influences the quality attributes of the excipient and that must be controlled within predetermined criteria.

Quality Management System (QMS): Management system that directs and controls a pharmaceutical company with regard to quality.

Quality Manual: Describes the elements of the QMS and includes the quality organizational structure, written policies, procedures, and processes or references to them, and a description of departmental functions as they relate to the policies, procedures, and processes. Document specifying the quality management system of an organization.

Quality Unit: See also: *Quality Control* and *Quality Assurance*. A group within a larger organization that is responsible for monitoring and ensuring all aspects of quality. Current industry practice generally divides the responsibilities of the quality control unit (QCU), as defined in the cGMP regulations, between quality control (QC) and quality assurance (QA) functions. QC usually involves (1) assessing the suitability of incoming components, containers, closures, labeling, in-process materials, and the finished products; (2) evaluating the performance of the manufacturing process to ensure adherence to proper specifications and limits; and (3) determining the acceptability of each batch for release. QA primarily involves (1) review and approval of all procedures related to production and maintenance, (2) review of associated records, and (3) auditing and performing/evaluating trend analyses.

Quarantine: The status of materials isolated physically or by other effective means pending a decision about their subsequent approval or rejection.

Raw Material: A general term used to denote starting materials, reagents, and solvents intended for use in the production of intermediates or excipients.

Recall: See *Retrieval*.

Record: A document stating results achieved or providing evidence of activities performed. The medium can be paper, magnetic, electronic or optical, photographic, another medium, or a combination thereof.

Reevaluation Date (Retest Date, Re-evaluation Interval): The date when the material should be reexamined to ensure that it is still in conformity with the specification.

Recommended Re-evaluation Date: The date suggested by the supplier when the material should be re-evaluated to ensure continued compliance with specifications. It differs from the Expiration Date because the excipient can be re-evaluated to extend the length of time the material can be used, if supported by the results of the evaluation and appropriate stability data.

Repackager: A person or organization that takes an excipient from the original manufacturer's container and repackages it into different containers. See also *Distributor* and *Packaging/Repackaging Distributor*.

Repackaging: Removal of the excipient from its original container (combination of secondary and/or primary packaging), and transfer to another container.

Reprocessing: Introduction of previously processed material that did not conform to standards or specifications back into the process and repetition of one or more necessary steps that are part of the normal manufacturing process.

Retrieval (Recall): Process for the removal of an excipient from the distribution chain.

Reworking: Subjecting previously processed material that did not conform to standards or specifications to processing steps that differ from the normal process.

Secondary, Primary Packaging: See *Primary, Secondary Packaging*.

Senior Management: See *Top Management*.

Significant Change: A change that alters an excipient's physical or chemical property from the norm or that is likely to alter the excipient's performance in the dosage form.

Specification: The quality parameters to which the excipient, component, or intermediate must conform and that serve as a basis for quality evaluation.

Stability: Continued conformity of the excipient to its specifications.

Stable Process: A process whose output, regardless of the nature of the processing (batch or continuous), can be demonstrated by appropriate means to show a level of variability that consistently meets all aspects of the stated specification (both USP and customer specifications) and thus is acceptable for its intended use.

Subcontractor: A person or organization that undertakes work or services on behalf of a different person or organization that in turn is contracted to undertake work or provide services from the original contract giver.

Supplier's Certification Documentation: Specific information and data associated with a single batch of an excipient. Its accuracy is certified by the business entity that has had control of the same single batch of excipient. Supplier's Certification Documentation includes both quality and supply chain data and information. The methods and processes that derive the included data and information should be understood and controlled, and all data and information sources should be traceable. All entities that take possession and responsibility for the excipient batch should provide Supplier's Certification Documentation including the original excipient manufacturer, all distributors, and all repackagers. Special attention and clarity should be applied within the Supplier's

Accessed from 167.78.4.19 by James Cumbie (ocean22) on Mon Sep 09 15:04:23 EDT 2013

Certification Documentation in any event that breaches the original manufacturer's packaging and/or labels (including addition of new labels).

Third-Party Audit: An audit conducted by an individual from outside the organization and who is neither a supplier nor customer of the organization, e.g., a certification body, to determine the effectiveness of a system.

Top Management: Person or group of people who direct and control an organization at the highest level. The highest level can be at either the site level or the corporate level and depends on how the quality management system is organized.

Traceability: Ability to determine the history, application, or location that is under consideration, e.g., origin of materials and parts, processing history, or distribution of the product after delivery.

Trader: An entity that buys products from a manufacturer, may or may not take possession of the products, and resells them to another party or parties.

NOTE: In the case of traders, the sale usually is made before product purchase.

User: A person or organization that uses pharmaceutical excipients to manufacture pharmaceutical intermediates or finished products.

Validation: A documented program that provides a high degree of assurance that a specific process, method, or system will consistently produce a result meeting predetermined acceptance criteria.

• *USP36*

⟨1211⟩ STERILIZATION AND STERILITY ASSURANCE OF COMPENDIAL ARTICLES

This informational chapter provides a general description of the concepts and principles involved in the quality control of articles that must be sterile. Any modifications of or variations in sterility test procedures from those described under *Sterility Tests* ⟨71⟩ should be validated in the context of the entire sterility assurance program and are not intended to be methods alternative to those described in that chapter.

Within the strictest definition of sterility, a specimen would be deemed sterile only when there is complete absence of viable microorganisms from it. However, this absolute definition cannot currently be applied to an entire lot of finished compendial articles because of limitations in testing. The sterility of a lot purported to be sterile is therefore defined in probabilistic terms, where the likelihood of a contaminated unit or article is acceptably remote. Such a state of sterility assurance can be established only through the use of validated sterilization processes or aseptic processing, if any, under appropriate current good manufacturing practice, and not by reliance solely on sterility testing. The basic principles for validation and certification of a sterilizing process are enumerated as follows:

1. Establish that the process equipment has the capability of operating within the required parameters.
2. Demonstrate that the critical control equipment and instrumentation are capable of operating within the prescribed parameters for the process equipment.
3. Perform replicate cycles representing the required operational range of the equipment and employing actual or simulated product. Demonstrate that the processes have been carried out within the prescribed protocol limits and, finally, that the probability of microbial survival in the replicate processes completed is not greater than the prescribed limits.
4. Monitor the validated process during routine operation. Periodically as needed, requalify and recertify the equipment.
5. Complete the protocols, and document steps (1) through (4) above.

The principles and implementation of a program to validate an aseptic processing procedure are substantially more extensive than the validation of a sterilization process. In aseptic processing, the components of the final dosage form are sterilized separately and the finished article is assembled in an aseptic manner.

Proper validation of the sterilization process or the aseptic process requires a high level of knowledge of the field of sterilization and clean room technology. In order to comply with currently acceptable and achievable limits in sterilization parameters, it is necessary to employ appropriate instrumentation and equipment to control the critical parameters such as temperature, time, pressure, humidity, sterilizing gas concentration, and/or absorbed radiation. An important aspect of the validation program in many sterilization procedures involves the employment of biological indicators (see *Biological Indicators* ⟨1035⟩). The validated and certified process should be revalidated periodically; however, the revalidation program need not necessarily be as extensive as the original program.

A typical validation program, as outlined below, is one designed for the steam autoclave, but several of these principles may be applicable to the other sterilization procedures discussed in this informational chapter. The program comprises several stages.

The *installation qualification* stage is intended to establish that controls and other instrumentation are properly designed and calibrated. Documentation should be on file demonstrating the quality of the required utilities such as steam, water, and air. The *operational qualification* stage is intended to confirm that the empty chamber functions within the parameters of temperature at key chamber locations prescribed in the protocol. It is usually appropriate to develop heat profile records, i.e., simultaneous temperatures in the chamber employing multiple temperature-sensing devices. A typical acceptable range of temperature in the empty chamber is ±1° when the chamber temperature is not less than 121°. The *confirmatory* stage of the validation program is the actual sterilization of materials or articles. This determination requires the employment of temperature-sensing devices inserted into samples of the

Copyright (c) 2013 The United States Pharmacopeial Convention. All rights reserved.

articles, as well as samples of the articles to which appropriate concentrations of suitable test microorganisms (biological indicators) have been added in operationally fully loaded autoclave configurations. The effectiveness of moist heat penetration into the actual articles and the time of the exposure are the two main factors that determine the lethality of the sterilization process. The *final* stage of the validation program requires the documentation of the supporting data developed in executing the program.

It is generally accepted that terminally sterilized injectable articles or critical devices purporting to be sterile, when sterilized, attain a 10^{-6} microbial survivor probability, i.e., assurance of less than or equal to 1 chance in 1 million that viable microorganisms are present in the sterilized article or dosage form. With heat-stable articles, the approach often is to exceed the critical time necessary to achieve the 10^{-6} microbial survivor probability (overkill) of presterilization bioburden that is considerably greater in population (typically 10^6) and resistance (typically D121 is equal to or greater than 1.0 minute) than the natural presterilization bioburden. However, with an article where extensive heat exposure may have a damaging effect, it will not be feasible to employ an overkill approach. In this latter instance, the development of the sterilization cycle depends heavily on knowledge of the population and resistance microbial burden of the product, based on examination, over a suitable time period, of a substantial number of lots of the presterilized product.

The D value is the time (in minutes) required to reduce the microbial population by 90% or 1 log cycle (i.e., to a surviving fraction of 1/10), at a specific lethal condition, such as, temperature. Therefore, where the D value of a BI preparation of, for example, *Geo bacillus stearothermophilus* spores is 1.5 minutes under the process conditions defined, e.g., at 121°, if it is treated for 12 minutes under the same conditions, it can be stated that the lethality input is 8D. The effect of applying this input to the product would depend on the initial microbial burden. Assuming that its resistance to sterilization is equivalent to that of the BI, if the microbial burden of the product in question is 10^2 microorganisms, a lethality input of 2D yields a microbial burden of 1 (10^0 theoretical), and a further 6D yields a calculated microbial survivor probability of 10^{-6}. (Under the same conditions, a lethality input of 12D may be used in a typical "overkill" approach.) Generally, the survivor probability achieved for the article under the validated sterilization cycle is not completely correlated with what may occur with the BI. For valid use, therefore, it is essential that the resistance of the BI be greater than that of the natural microbial burden of the article sterilized. It is then appropriate to make a worst-case assumption and treat the microbial burden as though its heat resistance were equivalent to that of the BI, although it is not likely that the most resistant of a typical microbial burden isolates will demonstrate a heat resistance of the magnitude shown by this species, frequently employed as a BI for steam sterilization. In the above example, a 12-minute cycle is considered adequate for sterilization if the product had a microbial burden of 10^2 microorganisms. However, if the indicator originally had 10^6 microorganisms content, actually a 10^{-2} probability of survival could be expected; i.e., 1 in 100 BIs may yield positive results. This type of situation may be avoided by selection of the appropriate BI. Alternatively, high content indicators may be used on the basis of a predetermined acceptable count reduction.

The D value for the *Geo bacillus stearothermophilus* preparation determined or verified for these conditions should be reestablished when a specific program of validation is changed. Determination of survival curves (see *Biological Indicators* ⟨1035⟩), or what has been called the fractional cycle approach, may be employed to determine the D value of the biological indicator preferred for the specific sterilization procedure. The fractional cycle approach may also be used to evaluate the resistance of the microbial burden. Fractional cycles are studied either for microbial count-reduction or for fraction negative achievement. These numbers may be used to determine the lethality of the process under production conditions. The data can be used in qualified production equipment to establish appropriate sterilization cycles. A suitable biological indicator such as the *Geo bacillus stearothermophilus* preparation may be employed also during routine sterilization. Any microbial burden-based sterilization process requires adequate surveillance of the microbial resistance of the article to detect any changes, in addition to periodic surveillance of other attributes.

METHODS OF STERILIZATION

In this informational chapter, five methods of terminal sterilization, including removal of microorganisms by filtration and guidelines for aseptic processing, are described. Modern technological developments, however, have led to the use of additional procedures. These include blow-molding (at high temperatures), forms of moist heat other than saturated steam and UV irradiation, as well as on-line continuous filling in aseptic processing. The choice of the appropriate process for a given dosage form or component requires a high level of knowledge of sterilization techniques and information concerning any effects of the process on the material being sterilized.[1]

Steam Sterilization

The process of thermal sterilization employing saturated steam under pressure is carried out in a chamber called an autoclave. It is probably the most widely employed sterilization process. The basic principle of operation is that the air in the sterilizing chamber is displaced by the saturated steam, achieved by employing vents or traps. In order to displace air more effectively from the chamber and from within articles, the sterilization cycle may include air and steam evacuation stages. The design or choice of a cycle for given products or components depends on a number of factors, including the heat lability of the material, knowledge of heat

[1] Documents addressing the development and validation of sterilization cycles and related topics include, by the Parenteral Drug Association, Inc. (PDA), *Validation of Moist Heat Sterilization Processes: Cycle Design, Development, Qualification and Ongoing Control* (Technical Report No. 1); *Process Simulation for Aseptically Filled Products* (Technical Report No. 22); *Sterilizing Filtration of Liquids* (Technical Report No. 26); and *Validation of Dry Heat Processes Used for Sterilization and Depyrogenation* (Technical Monograph No. 3); and by the Pharmaceutical Manufacturers Association (PMA), *Validation of Sterilization of Large-Volume Parenterals—Current Concepts* (Science and Technology Publication No. 25). Other technical publications include Health Industry Manufacturers Association (HIMA), *Validation of Sterilization Systems* (Report No. 78-4.1); *Sterilization Cycle Development* (Report No. 78-4.2); *Industrial Sterility: Medical Device Standards and Guidelines* (Document #9, Vol. 1); and *Operator Training . . . for Ethylene Oxide Sterilization, for Steam Sterilization Equipment, for Dry Heat Sterilization Equipment, and for Radiation Sterilization Equipment* (Report Nos. 78-4.5 through 4.8). Recommended practice guidelines published by the Association for the Advancement of Medical Instrumentation (AAMI) include *Guideline for Industrial Ethylene Oxide Sterilization of Medical Devices—Process Design, Validation, Routine Sterilization* (No. OPEO-12/81) and *Process Control Guidelines for the Radiation Sterilization of Medical Devices* (No. RS-P 10/82). Additional radiation sterilization content can be found in ISO 11137—*Sterilization of Health Care Products—Requirements for Validation and Routine Control—Radiation Sterilization*. These more detailed publications should be consulted for more extensive treatment of the principles and procedures described in this chapter.

Accessed from 167.78.4.19 by James Cumbie (ocean22) on Mon Sep 09 15:04:23 EDT 2013

penetration into the articles, and other factors described under the validation program (see above). Apart from that description of sterilization cycle parameters, using a temperature of 121°, the F_0 concept may be appropriate. The F_0, at a particular temperature other than 121°, is the time (in minutes) required to provide the lethality equivalent to that provided at 121° for a stated time. Modern autoclaves generally operate with a control system that is significantly more responsive than the steam reduction valve of older units that have been in service for many years. In order for these older units to achieve the precision and level of control of the cycle discussed in this chapter, it may be necessary to upgrade or modify the control equipment and instrumentation on these units. This modification is warranted only if the chamber and steam jacket are intact for continued safe use and if deposits that interfere with heat distribution can be removed.

Dry-Heat Sterilization/Depyrogenation

The process of thermal sterilization of Pharmacopeial articles by dry heat may be carried out by a batch process in an oven designed expressly for that purpose or in a dry-heat tunnel in which glass containers move on a continuous basis through the system. A dry-heat sterilization/depyrogenation system is supplied with heated, HEPA filtered air, distributed uniformly throughout the unit by convection or radiation and employing a blower system with devices for sensing, monitoring, and controlling all critical parameters. A typical acceptable range in temperature in the empty chamber is ±15° when the unit is operating at not less than 250°.

In addition to the batch process described above, the continuous-tunnel system usually requires a much higher temperature than cited above for the batch process because of a much shorter dwell time. The continuous process also usually necessitates a rapid cooling stage prior to the aseptic filling operation. In the qualification and validation program, in view of the short dwell time, parameters for uniformity of the temperature, and particularly the dwell time, should be established.

Because depyrogenation is a more rigorous challenge for dry-heat processing systems than biological indicator inactivation, it is generally not necessary to include BIs when validating dry-heat processes if validation of depyrogenation is demonstrated. A 3 log cycle reduction or greater is a suitable acceptance criterion for depyrogenation and when successfully demonstrated will ensure not only adequate depyrogenation of compendial articles but also sterilization. Depyrogenation tests are typically done using articles inoculated with reference standard endotoxin. Articles are then evaluated after exposure for residual levels of endotoxin using *Limulus* lysate-based assays. For additional information on the endotoxin assay, see *Bacterial Endotoxins Test* ⟨85⟩.

Gas Sterilization

The choice of gas sterilization as an alternative to heat is frequently made when the material to be sterilized cannot withstand the high temperatures obtained in the steam sterilization or dry-heat sterilization processes. The most commonly employed method of gaseous sterilization is ethylene oxide. Among the disadvantages of ethylene oxide are its highly flammable nature unless mixed with suitable inert gases, its mutagenic properties, and the possibility of toxic residues in treated materials, particularly those containing chloride ions. The sterilization process is generally carried out in a pressure and vacuum-rated chamber designed similarly to a steam autoclave but with the additional features (see below) unique to sterilizers employing this gas. Facilities employing this sterilizing agent should be designed to provide adequate post sterilization degassing, to enable microbial survivor monitoring, and to minimize exposure of operators to the potentially harmful gas.[2]

Validation of a sterilizing process employing ethylene oxide gas is accomplished along the lines discussed earlier. However, the program is more comprehensive than for the other sterilization procedures, because in addition to temperature, the humidity, vacuum/positive pressure, and ethylene oxide concentration also require appropriate parametric control. An important determination is to demonstrate that all critical process parameters in the chamber are adequate during the entire cycle. Because the sterilization parameters applied to the articles to be sterilized are critical variables, it is frequently advisable to precondition the load to achieve the required moisture content in order to minimize the time of holding at the required temperature before placement of the load in the ethylene oxide chamber. Validation is generally conducted employing product inoculated with appropriate BIs such as spore preparations of *Bacillus atrophaeus.* For validation they may be used in full chamber loads of product, or simulated product. The monitoring of moisture and gas concentration requires the utilization of sophisticated instrumentation that only knowledgeable and experienced individuals can calibrate, operate, and maintain. BIs may also be employed in monitoring routine runs.

As is indicated elsewhere in this chapter, the BI may be employed in a fraction negative mode to establish the ultimate microbiological survivor probability in designing an ethylene oxide sterilization cycle using inoculated product or inoculated simulated product.

One of the principal limiting factors of the ethylene oxide sterilization process is the limited ability of the gas to diffuse to the innermost product areas that require sterilization. Package design and chamber loading patterns therefore must be determined to allow for necessary gas penetration. The reader is referred to ISO 11135 for a complete description of process development, validation, and routine control of ethylene oxide sterilization processes.

Sterilization by Ionizing Radiation

The rapid proliferation of medical devices unable to withstand heat sterilization and the concerns about the safety of ethylene oxide have resulted in increasing applications of radiation sterilization. This method may also be applicable to active pharmaceutical ingredients and final dosage forms. The advantages of sterilization by irradiation include low chemical reactivity, low measurable residues, and the fact that there are fewer variables to control. In fact, radiation sterilization is unique in that the basis of control is

[2] See *Ethylene Oxide*, Encyclopedia of Industrial Chemical Analysis, 1971, *12*, 317–340, John Wiley & Sons, Inc., and *Use of Ethylene Oxide as a Sterilant in Medical Facilities*, NIOSH Special Occupational Hazard Review with Control Recommendations, August 1977, U.S. Department of Health and Human Services, Public Health Service, Centers for Disease Control and Prevention, National Institute for Occupational Safety and Health, Division of Criteria Documentation and Standards Development, Priorities and Research Analysis Branch, Rockville, MD.

Copyright (c) 2013 The United States Pharmacopeial Convention. All rights reserved.

essentially that of the absorbed radiation dose, which can be precisely measured. Dose-setting and dose-substantiation procedures are typically used to validate the radiation dose required to achieve a sterility assurance level. Irradiation causes only a minimal temperature rise but can affect certain grades and types of plastics and glass.

The two types of ionizing radiation in use are radioisotope decay (gamma radiation) and electron-beam radiation. In either case the radiation dose established to yield the required degree of sterility assurance should be such that, within the range of minimum and maximum doses set, the properties of the article being sterilized are acceptable. The reader is referred to ISO 11137-1, - 2, and -3 for a complete description of process development, validation, and routine control of ionizing radiation processes.

Sterilization by Filtration

The sterilization of fluids by filtration is a separative process and differs from the other methods of sterilization that rely on destructive mechanisms. Filtration through microbial retentive materials is frequently employed for the sterilization of heat-labile solutions by physical removal of the contained microorganisms. A filter assembly generally consists of a porous matrix integrated with or clamped into a housing. The effectiveness of a filter medium depends upon the pore size of the porous material, the prefiltration bioburden, and may depend upon adsorption of bacteria on or in the filter matrix or upon a sieving mechanism. There is some evidence to indicate that sieving is the more important component of the mechanism. While fiber-shedding filters are to be avoided unless no alternative filtration procedures are possible, it should be noted that in accordance with 21CFR 211.72, the use of asbestos-containing filters is prohibited. Where a fiber-shedding filter is required, it is obligatory that the process include a nonfiber-shedding filter introduced downstream or subsequent to the initial filtration step.

Filter Rating—The pore sizes of filter membranes are rated by a nominal rating that reflects the capability of the filter membrane to retain microorganisms of size represented by specified strains, not by determination of an average pore size and statement of distribution of sizes. Sterilizing filters cannot be narrowly defined because, depending upon the bioburden present in the fluid stream, different filters may be considered effective for sterilization. Currently a sterilizing filter can be defined as, "a filter that, when appropriately validated, will remove all microorganisms from a fluid stream, producing a sterile effluent". The nominal ratings of sterilizing filters based on microbial retention properties differ when rating is done by other means, e.g., by retention of latex spheres of various diameters. It is the user's responsibility to select a filter of correct rating for the particular purpose, depending on the nature of the product (especially considering its potential bioburden) to be filtered. It is not feasible to repeat the tests of filtration capacity in the user's establishment. Microbial challenge tests are preferably performed under a manufacturer's conditions on each lot of manufactured filter membranes.

The user must determine whether filtration parameters employed in manufacturing will significantly influence microbial retention efficiency. Some of the other important concerns in the validation of the filtration process include product compatibility, sorption of drug, preservative or other additives, and initial effluent endotoxin content.

Because the effectiveness of the filtration process is also influenced by the microbial burden of the solution to be filtered, determining the microbiological quality of solutions prior to filtration is an important aspect of the validation of the filtration process, in addition to establishing the other parameters of the filtration procedure, such as pressures, flow rates, and filter unit characteristics. Hence, another method of describing filter-retaining capability is the use of the log reduction value (LRV). For instance, a 0.2-µm filter that can retain 10^7 microorganisms of a specified strain will have an LRV of not less than 7 under the stated conditions.

The housings and filter assemblies that are chosen should first be validated for compatibility and integrity by the user. While it may be possible to mix assemblies and filter membranes produced by different manufacturers, the compatibility of these hybrid assemblies should first be validated. Additionally, there are other tests to be made by the manufacturer of the membrane filter, which are not usually repeated by the user. These include microbiological challenge tests. Results of these tests on each lot of manufactured filter membranes should be obtained from the manufacturer by users for their records.

Filtration for sterilization purposes is usually carried out with assemblies having membranes of nominal pore size rating of 0.2 µm or less. A membrane filter assembly must be tested for initial integrity prior to use, provided that such test does not impair the safety, integrity, and validity of the system, and should be tested after the filtration process is completed to demonstrate that the filter assembly maintained its integrity throughout the entire filtration procedure. Typical use tests are the bubble point test, the diffusive airflow test, the pressure hold test, and the forward flow test. These tests should be correlated with microorganism retention.

Unidirectional Aseptic Processing

Although there is general agreement that sterilization of the final filled container as a dosage form or final packaged device is the preferred process for ensuring the minimal risk of microbial contamination in a lot, there is a substantial class of products that are not terminally sterilized but are prepared by a series of aseptic steps. These are designed to prevent the introduction of viable microorganisms into components, where sterile, or once an intermediate process has rendered the bulk product or its components free from viable microorganisms. The fundamental difference between aseptically produced sterile products and terminally sterilized products is the presence of a step that can be validated, whereby the final package is subjected to conditions shown to kill viable contaminants. Consequently, an aseptically filled product labeled as sterile must use a system of risk assessments to establish that an acceptable level of sterility assurance has been achieved. Current technology cannot provide an adequate safety assessment based on individual unit testing. In currently used methods of environmental monitoring, process simulations have not been shown to correlate directly with contaminated finished products. Finished product destructive testing (sterility tests) can only examine a very small percentage of a lot and are thus only capable of detecting grossly contaminated lots. This section provides a review of the principles involved in producing aseptically processed products with a minimal risk of microbial contamination in the finished lot of final dosage forms.

Accessed from 167.78.4.19 by James Cumbie (ocean22) on Mon Sep 09 15:04:23 EDT 2013

A product defined as aseptically processed is likely to consist of components that have been sterilized by one of the processes described earlier in this chapter. For example, the bulk product, if a filterable liquid, may have been sterilized by filtration. The final empty container components would probably be sterilized by heat, dry heat being employed for glass vials and an autoclave being employed for rubber closures. The areas of critical concern are the immediate microbial environment where these presterilized components are exposed during assembly to produce the finished dosage form and the aseptic filling operation.

The requirements for a properly designed, validated, and maintained filling or other aseptic processing facility are mainly directed to (1) an air environment that is suitably controlled with respect to viable and nonviable particulates, of a proper design to permit effective maintenance of air supply units, and (2) the provision of trained operating personnel who are adequately equipped and gowned. The desired environment may be achieved through the high level of air filtration technology now available, which contributes to the delivery of air of the requisite microbiological quality.[3] The facilities include both primary (in the vicinity of the exposed article) and secondary (where the aseptic processing is carried out) barrier systems.

For a properly designed aseptic processing facility or aseptic filling area, consideration should be given to such features as nonporous and smooth surfaces, including walls and ceilings that can withstand routine decontamination; gowning rooms with adequate space for personnel and storage of sterile garments; adequate separation of preparatory rooms for personnel from final aseptic processing rooms, with the availability, if necessary, of devices such as airlocks and air showers; proper pressure differentials between rooms, the most positive pressure being in the aseptic processing rooms or areas; the employment of unidirectional airflow in the immediate vicinity of exposed product or components, and filtered air exposure thereto, with adequate air change frequency; appropriate humidity and temperature environmental controls; and a documented sanitization program. Proper training of personnel in hygienic and gowning techniques should be undertaken so that, for example, gowns, gloves, and other body coverings substantially cover exposed skin surfaces.

Certification and validation of the aseptic process and facility are achieved by establishing the efficiency of the filtration systems, by employing microbiological environmental monitoring procedures, and by processing of sterile culture medium as simulated product.

Monitoring of the aseptic facility should include periodic HEPA filter evaluation and testing, as well as routine particulate and microbiological environmental monitoring. Periodic media-fill or process-simulation testing should also be performed.

STERILITY TESTING OF LOTS

It should be recognized that the referee sterility test might not detect microbial contamination if present in only a small percentage of the finished articles in the lot because the specified number of units to be taken imposes a significant statistical limitation on the utility of the test results. This inherent limitation, however, has to be accepted, because current knowledge offers no nondestructive alternatives for ascertaining the microbiological quality of every finished article in the lot, and it is not a feasible option to increase the number of specimens significantly. For information regarding the conduct of the sterility test please see *Sterility Tests* ⟨71⟩.

⟨1231⟩ WATER FOR PHARMACEUTICAL PURPOSES

INTRODUCTION

Water is widely used as a raw material, ingredient, and solvent in the processing, formulation, and manufacture of pharmaceutical products, active pharmaceutical ingredients (APIs) and intermediates, compendial articles, and analytical reagents. This general information chapter provides additional information about water, its quality attributes that are not included within a water monograph, processing techniques that can be used to improve water quality, and a description of minimum water quality standards that should be considered when selecting a water source.

This information chapter is not intended to replace existing regulations or guides that already exist to cover USA and International (ICH or WHO) GMP issues, engineering guides, or other regulatory (FDA, EPA, or WHO) guidances for water. The contents will help users to better understand pharmaceutical water issues and some of the microbiological and chemical concerns unique to water. This chapter is not an all-inclusive writing on pharmaceutical waters. It contains points that are basic information to be considered, when appropriate, for the processing, holding, and use of water. It is the user's responsibility to assure that pharmaceutical water and its production meet applicable governmental regulations, guidances, and the compendial specifications for the types of water used in compendial articles.

Control of the chemical purity of these waters is important and is the main purpose of the monographs in this compendium. Unlike other official articles, the bulk water monographs (*Purified Water* and *Water for Injection*) also limit how the article can be produced because of the belief that the nature and robustness of the purification process is directly related to the resulting purity. The chemical attributes listed in these monographs should be considered as a set of minimum specifications. More stringent specifications may be needed for some applications to ensure suitability for particular uses. Basic guidance on the appropriate applications of these waters is found in the monographs and is further explained in this chapter.

[3] Available published standards for such controlled work areas include the following: (1) ISO 14464 1-7 Cleanrooms and Associated Controlled Environments. (2) NASA Standard for Clean Room and Work Stations for Microbially Controlled Environment, publication NHB5340.2, Aug. 1967. (3) Contamination Control of Aerospace Facilities, U.S. Air Force, T.O. 00-25-203, 1 Dec. 1972, change 1-1, Oct. 1974.

Copyright (c) 2013 The United States Pharmacopeial Convention. All rights reserved.

Control of the microbiological quality of water is important for many of its uses. Most packaged forms of water that have monograph standards are required to be sterile because some of their intended uses require this attribute for health and safety reasons. USP has determined that a microbial specification for the bulk monographed waters is inappropriate, and it has not been included within the monographs for these waters. These waters can be used in a variety of applications, some requiring extreme microbiological control and others requiring none. The needed microbial specification for a given bulk water depends upon its use. A single specification for this difficult-to-control attribute would unnecessarily burden some water users with irrelevant specifications and testing. However, some applications may require even more careful microbial control to avoid the proliferation of microorganisms ubiquitous to water during the purification, storage, and distribution of this substance. A microbial specification would also be inappropriate when related to the "utility" or continuous supply nature of this raw material. Microbial specifications are typically assessed by test methods that take at least 48 to 72 hours to generate results. Because pharmaceutical waters are generally produced by continuous processes and used in products and manufacturing processes soon after generation, the water is likely to have been used well before definitive test results are available. Failure to meet a compendial specification would require investigating the impact and making a pass/fail decision on all product lots between the previous sampling's acceptable test result and a subsequent sampling's acceptable test result. The technical and logistical problems created by a delay in the result of such an analysis do not eliminate the user's need for microbial specifications. Therefore, such water systems need to be operated and maintained in a controlled manner that requires that the system be validated to provide assurance of operational stability and that its microbial attributes be quantitatively monitored against established alert and action levels that would provide an early indication of system control. The issues of water system validation and alert/action levels and specifications are included in this chapter.

SOURCE OR FEED WATER CONSIDERATIONS

To ensure adherence to certain minimal chemical and microbiological quality standards, water used in the production of drug substances or as source or feed water for the preparation of the various types of purified waters must meet the requirements of the National Primary Drinking Water Regulations (NPDWR) (40 CFR 141) issued by the U.S. Environmental Protection Agency (EPA) or the drinking water regulations of the European Union or Japan, or the WHO drinking water guidelines. Limits on the types and quantities of certain organic and inorganic contaminants ensure that the water will contain only small, safe quantities of potentially objectionable chemical species. Therefore, water pretreatment systems will only be challenged to remove small quantities of these potentially difficult-to-remove chemicals. Also, control of objectionable chemical contaminants at the source-water stage eliminates the need to specifically test for some of them (e.g., trihalomethanes and heavy metals) after the water has been further purified.

Microbiological requirements of drinking water ensure the absence of coliforms, which, if determined to be of fecal origin, may indicate the potential presence of other potentially pathogenic microorganisms and viruses of fecal origin. Meeting these microbiological requirements does not rule out the presence of other microorganisms, which could be considered undesirable if found in a drug substance or formulated product.

To accomplish microbial control, municipal water authorities add disinfectants to drinking water. Chlorine-containing and other oxidizing substances have been used for many decades for this purpose and have generally been considered to be relatively innocuous to humans. However, these oxidants can interact with naturally occurring organic matter to produce disinfection by-products (DBPs), such as trihalomethanes (THMs, including chloroform, bromodichloromethane, and dibromochloromethane) and haloacetic acids (HAAs, including dichloroacetic acid and trichloroacetic acid). The levels of DBPs produced vary with the level and type of disinfectant used and the levels and types of organic materials found in the water, which can vary seasonally.

Because high levels of DBPs are considered a health hazard in drinking water, drinking water regulations mandate their control to generally accepted nonhazardous levels. However, depending on the unit operations used for further water purification, a small fraction of the DBPs in the starting water may carry over to the finished water. Therefore, the importance of having minimal levels of DBPs in the starting water, while achieving effective disinfection, is important.

DBP levels in drinking water can be minimized by using disinfectants such as ozone, chloramines, or chlorine dioxide. Like chlorine, their oxidative properties are sufficient to damage some pretreatment unit operations and must be removed early in the pretreatment process. The complete removal of some of these disinfectants can be problematic. For example, chloramines may degrade during the disinfection process or during pretreatment removal, thereby releasing ammonia, which in turn can carry over to the finished water. Pretreatment unit operations must be designed and operated to adequately remove the disinfectant, drinking water DBPs, and objectionable disinfectant degradants. A serious problem can occur if unit operations designed to remove chlorine were, without warning, challenged with chloramine-containing drinking water from a municipality that had been mandated to cease use of chlorine disinfection to comply with ever tightening EPA Drinking Water THM specifications. The dechlorination process might incompletely remove the chloramine, which could irreparably damage downstream unit operations, but also the release of ammonia during this process might carry through pretreatment and prevent the finished water from passing compendial conductivity specifications. The purification process must be reassessed if the drinking water disinfectant is changed, emphasizing the need for a good working relationship between the pharmaceutical water manufacturer and the drinking water provider.

Change to read:

TYPES OF WATER

There are many different grades of water used for pharmaceutical purposes. Several are described in *USP* monographs that specify uses, acceptable methods of preparation, and quality attributes. These waters can be divided into two general types: bulk waters, which are typically produced on site where they are used; and sterile waters, which are produced, packaged, and sterilized to preserve microbial quality throughout their packaged shelf life. There are several specialized types of sterile waters, differing in their designated applications, packaging limitations, and other quality attributes.

Accessed from 167.78.4.19 by James Cumbie (ocean22) on Mon Sep 09 15:04:23 EDT 2013

There are also other types of water for which there are no monographs. These are all bulk waters, with names given for descriptive purposes only. Many of these waters are used in specific analytical methods. The associated text may not specify or imply certain quality attributes or modes of preparation. These nonmonographed waters may not necessarily adhere strictly to the stated or implied modes of preparation or attributes. Waters produced by other means or controlled by other test attributes may equally satisfy the intended uses for these waters. It is the user's responsibility to ensure that such waters, even if produced and controlled exactly as stated, be suitable for their intended use. Wherever the term "water" is used within these compendia without other descriptive adjectives or clauses, the intent is that water of no less purity than *Purified Water* be used.

What follows is a brief description of the various types of pharmaceutical waters and their significant uses or attributes. *Figure 1* may also be helpful in understanding some of the various types of waters.

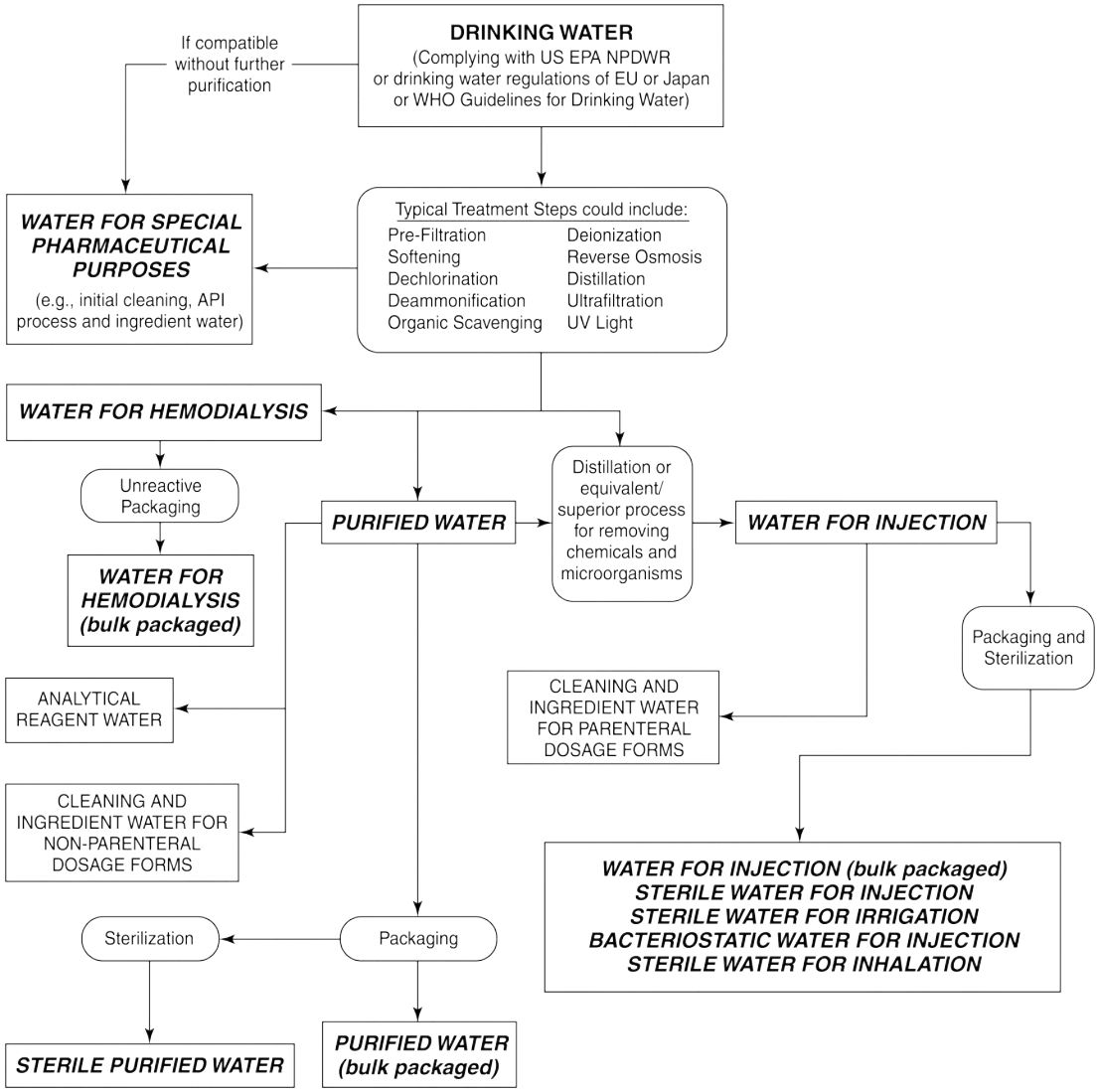

Figure 1. Water for pharmaceutical purposes.

Bulk Monographed Waters and Steam

The following waters are typically produced in large volume by a multiple-unit operation water system and distributed by a piping system for use at the same site. These particular pharmaceutical waters must meet the quality attributes as specified in the related monographs.

Purified Water—*Purified Water* (see the *USP* monograph) is used as an excipient in the production of nonparenteral preparations and in other pharmaceutical applications, such as cleaning of certain equipment and nonparenteral product-contact components.

Copyright (c) 2013 The United States Pharmacopeial Convention. All rights reserved.

Unless otherwise specified, *Purified Water* is also to be used for all tests and assays for which water is indicated (see *General Notices and Requirements*). *Purified Water* is also referenced throughout the *USP–NF*. Regardless of the font and letter case used in its spelling, water complying with the *Purified Water* monograph is intended. *Purified Water* must meet the requirements for ionic and organic chemical purity and must be protected from microbial contamination. The minimal quality of source or feed water for the production of *Purified Water* is *Drinking Water*. This source water may be purified using unit operations that include deionization, distillation, ion exchange, reverse osmosis, filtration, or other suitable purification procedures. Purified water systems must be validated to reliably and consistently produce and distribute water of acceptable chemical and microbiological quality. Purified water systems that function under ambient conditions are particularly susceptible to the establishment of tenacious biofilms of microorganisms, which can be the source of undesirable levels of viable microorganisms or endotoxins in the effluent water. These systems require frequent sanitization and microbiological monitoring to ensure water of appropriate microbiological quality at the points of use.

The *Purified Water* monograph also allows bulk packaging for commercial use elsewhere. In contrast to *Sterile Purified Water*, bulk packaged *Purified Water* is not required to be sterile. Because there is potential for microbial contamination and other quality changes in this bulk packaged nonsterile water, this form of *Purified Water* should be prepared and stored in a fashion that limits microbial growth and/or is simply used in a timely fashion before microbial proliferation renders it unsuitable for its intended use. Also depending on the material used for packaging, there could be extractable compounds leaching into the water from the packaging. Though this article is required to meet the same chemical purity limits as the bulk water, packaging extractables will render the packaged water less pure than the bulk water. The nature of these impurities may even render the water an inappropriate choice for some applications. It is the user's responsibility to ensure fitness for use of this packaged article when used in manufacturing, clinical, or analytical applications where the pure bulk form of the water is indicated.

Water for Injection—*Water for Injection* (see the *USP* monograph) is used as an excipient in the production of parenteral and other preparations where product endotoxin content must be controlled, and in other pharmaceutical applications, such as cleaning of certain equipment and parenteral product-contact components. The minimum quality of source or feed water for the generation of *Water for Injection* is *Drinking Water* as defined by the U.S. Environmental Protection Agency (EPA), EU, Japan, or WHO. This source water may be pretreated to render it suitable for subsequent distillation (or whatever other validated process is used according to the monograph). The finished water must meet all of the chemical requirements for *Purified Water* as well as an additional bacterial endotoxin specification. Because endotoxins are produced by the kinds of microorganisms that are prone to inhabit water, the equipment and procedures used by the system to purify, store, and distribute *Water for Injection* must be designed to minimize or prevent microbial contamination as well as remove incoming endotoxins from the starting water. *Water for Injection* systems must be validated to reliably and consistently produce and distribute this quality of water.

The *Water for Injection* monograph also allows bulk packaging for commercial use. In contrast to *Sterile Water for Injection*, bulk packaged *Water for Injection* is not required to be sterile. However, to preclude significant changes in its microbial and endotoxins content during storage, this form of *Water for Injection* should be prepared and stored in a fashion that limits microbial growth and/or is simply used in a timely fashion before microbial proliferation renders it unsuitable for its intended use. Also depending on the material used for packaging, there could be extractable compounds leaching into the water from the packaging. Though this article is required to meet the same chemical purity limits as the bulk water, packaging extractables will render the packaged water less pure than the bulk water. The nature of these impurities may even render the water an inappropriate choice for some applications. It is the user's responsibility to ensure fitness for use of this packaged article when used in manufacturing, clinical, or analytical applications where the purer bulk form of the water is indicated.

Water for Hemodialysis—*Water for Hemodialysis* (see the *USP* monograph) is used for hemodialysis applications, primarily the dilution of hemodialysis concentrate solutions. It is produced and used on site and is made from EPA Drinking Water that has been further purified to reduce chemical and microbiological components. It may be packaged and stored in unreactive containers that preclude bacterial entry. The term "unreactive containers" implies that the container, especially its water contact surfaces, is not changed in any way by the water, such as by leaching of container-related compounds into the water or by any chemical reaction or corrosion caused by the water. The water contains no added antimicrobials and is not intended for injection. Its attributes include specifications for *Water conductivity, Total organic carbon* (or oxidizable substances), *Microbial limits,* and *Bacterial endotoxins.* The *Water conductivity* and *Total organic carbon* attributes are identical to those established for *Purified Water* and *Water for Injection;* however, instead of total organic carbon, the organic content may alternatively be measured by the test for *Oxidizable substances*. The *Microbial limits* attribute for this water is unique among the "bulk" water monographs, but is justified on the basis of this water's specific application that has microbial content requirements related to its safe use. The *Bacterial endotoxins* attribute is likewise established at a level related to its safe use.

Pure Steam—*Pure Steam* (see the *USP* monograph) is also sometimes referred to as "clean steam". It is used where the steam or its condensate would directly contact official articles or article-contact surfaces, such as during their preparation, sterilization, or cleaning where no subsequent processing step is used to remove any codeposited impurity residues. These *Pure Steam* applications include but are not limited to porous load sterilization processes, product or cleaning solutions heated by direct steam injection, or humidification of processes where steam injection is used to control the humidity inside processing vessels where the official articles or their in-process forms are exposed. The primary intent of using this quality of steam is to ensure that official articles or article-contact surfaces exposed to it are not contaminated by residues within the steam.

Pure Steam is prepared from suitably pretreated source water analogously to either the pretreatment used for *Purified Water* or *Water for Injection.* The water is vaporized with suitable mist elimination, and distributed under pressure. The sources of undesirable contaminants within *Pure Steam* could arise from entrained source water droplets, anticorrosion steam additives, or residues from the steam production and distribution system itself. The attributes in the *Pure Steam* monograph should detect most of the contaminants that could arise from these sources. If the official article exposed to potential *Pure Steam* residues is intended for parenteral use or other applications where the pyrogenic content must be controlled, the *Pure Steam* must additionally meet the specification for *Bacterial Endotoxins* ⟨85⟩.

Accessed from 167.78.4.19 by James Cumbie (ocean22) on Mon Sep 09 15:04:23 EDT 2013

These purity attributes are measured on the condensate of the article, rather than the article itself. This, of course, imparts great importance to the cleanliness of the *Pure Steam* condensate generation and collection process because it must not adversely impact the quality of the resulting condensed fluid.

Other steam attributes not detailed in the monograph, in particular, the presence of even small quantities of noncondensable gases or the existence of a superheated or dry state, may also be important for applications such as sterilization. The large release of energy (latent heat of condensation) as water changes from the gaseous to the liquid state is the key to steam's sterilization efficacy and its efficiency, in general, as a heat transfer agent. If this phase change (condensation) is not allowed to happen because the steam is extremely hot and in a persistent superheated, dry state, then its usefulness could be seriously compromised. Noncondensable gases in steam tend to stratify or collect in certain areas of a steam sterilization chamber or its load. These surfaces would thereby be at least partially insulated from the steam condensation phenomenon, preventing them from experiencing the full energy of the sterilizing conditions. Therefore, control of these kinds of steam attributes, in addition to its chemical purity, may also be important for certain *Pure Steam* applications. However, because these additional attributes are use-specific, they are not mentioned in the *Pure Steam* monograph.

Note that less pure "plant steam" may be used for steam sterilization of nonproduct contact nonporous loads, for general cleaning of nonproduct contact equipment, as a nonproduct contact heat exchange medium, and in all compatible applications involved in bulk pharmaceutical chemical and API manufacture.

Finally, owing to the lethal properties of *Pure Steam*, monitoring of microbial control within a steam system is unnecessary. Therefore, microbial analysis of the steam condensate is unnecessary.

Sterile Monographed Waters

The following monographed waters are packaged forms of either *Purified Water* or *Water for Injection* that have been sterilized to preserve their microbiological properties. These waters may have specific intended uses as indicated by their names and may also have restrictions on packaging configurations related to those uses. In general, these sterile packaged waters may be used in a variety of applications in lieu of the bulk forms of water from which they were derived. However, there is a marked contrast between the quality tests and purities for these bulk versus sterile packaged waters. These quality tests and specifications for sterile packaged waters have diverged from those of bulk waters to accommodate a wide variety of packaging types, properties, volumes, and uses. As a result, the inorganic and organic impurity specifications and levels of the bulk and sterile packaged forms of water are not equivalent as their name similarities imply. The packaging materials and elastomeric closures are the primary sources of these impurities, which tend to increase over these packaged articles' shelf lives. Therefore, due consideration must be given to the chemical purity suitability at the time of use of the sterile packaged forms of water when used in manufacturing, analytical, and cleaning applications in lieu of the bulk waters from which these waters were derived. It is the user's responsibility to ensure fitness for use of these sterile packaged waters in these applications. Nevertheless, for the applications discussed below for each sterile packaged water, their respective purities and packaging restrictions generally render them suitable by definition.

Sterile Purified Water—*Sterile Purified Water* (see the *USP* monograph) is *Purified Water*, packaged and rendered sterile. It is used in the preparation of nonparenteral compendial dosage forms or in analytical applications requiring *Purified Water* where access to a validated *Purified Water* system is not practical, where only a relatively small quantity is needed, where *Sterile Purified Water* is required, or where bulk packaged *Purified Water* is not suitably microbiologically controlled.

Sterile Water for Injection—*Sterile Water for Injection* (see the *USP* monograph) is *Water for Injection* packaged and rendered sterile. It is used for extemporaneous prescription compounding and as a sterile diluent for parenteral products. It may also be used for other applications where bulk *Water for Injection* or *Purified Water* is indicated but where access to a validated water system is either not practical or where only a relatively small quantity is needed. *Sterile Water for Injection* is packaged in single-dose containers not larger than 1 L in size.

Bacteriostatic Water for Injection—*Bacteriostatic Water for Injection* (see the *USP* monograph) is sterile *Water for Injection* to which has been added one or more suitable antimicrobial preservatives. It is intended to be used as a diluent in the preparation of parenteral products, most typically for multi-dose products that require repeated content withdrawals. It may be packaged in single-dose or multiple-dose containers not larger than 30 mL.

Sterile Water for Irrigation—*Sterile Water for Irrigation* (see the *USP* monograph) is *Water for Injection* packaged and sterilized in single-dose containers of larger than 1 L in size that allows rapid delivery of its contents. It need not meet the requirement under small-volume injections in the general test chapter *Particulate Matter in Injections* ⟨788⟩. It may also be used in other applications that do not have particulate matter specifications, where bulk *Water for Injection* or *Purified Water* is indicated but where access to a validated water system is not practical, or where somewhat larger quantities than are provided as *Sterile Water for Injection* are needed.

Sterile Water for Inhalation—*Sterile Water for Inhalation* (see the *USP* monograph) is *Water for Injection* that is packaged and rendered sterile and is intended for use in inhalators and in the preparation of inhalation solutions. It carries a less stringent specification for bacterial endotoxins than *Sterile Water for Injection* and therefore is not suitable for parenteral applications.

Nonmonographed Manufacturing Waters

In addition to the bulk monographed waters described above, nonmonographed waters can also be used in pharmaceutical processing steps such as cleaning, synthetic steps, or a starting material for further purification. The following is a description of several of these nonmonographed waters as cited in various locations within these compendia.

Copyright (c) 2013 The United States Pharmacopeial Convention. All rights reserved.

Drinking Water—This type of water can be referred to as Potable Water (meaning drinkable or fit to drink), National Primary Drinking Water, Primary Drinking Water, or National Drinking Water. Except where a singular drinking water specification is stated (such as the NPDWR [U.S. Environmental Protection Agency's National Primary Drinking Water Regulations as cited in 40 CFR Part 141]), this water must comply with the quality attributes of either the NPDWR, or the drinking water regulations of the European Union or Japan, or the WHO Drinking Water Guidelines. It may be derived from a variety of sources including a public water utility, a private water supply (e.g., a well), or a combination of these sources. *Drinking Water* may be used in the early stages of cleaning pharmaceutical manufacturing equipment and product-contact components. *Drinking Water* is also the minimum quality of water that should be used for the preparation of official substances and other bulk pharmaceutical ingredients. Where compatible with the processes, the allowed contaminant levels in *Drinking Water* are generally considered safe for use for official substances and other drug substances. Where required by the processing of the materials to achieve their required final purity, higher qualities of water may be needed for these manufacturing steps, perhaps even as pure as *Water for Injection* or *Purified Water*. Such higher purity waters, however, might require only selected attributes to be of higher purity than *Drinking Water* (see *Figure 2*). *Drinking Water* is the prescribed source or feed water for the production of bulk monographed pharmaceutical waters. The use of *Drinking Water* specifications establishes a reasonable set of maximum allowable levels of chemical and microbiological contaminants with which a water purification system will be challenged. As seasonal variations in the quality attributes of the *Drinking Water* supply can occur, due consideration to its synthetic and cleaning uses must be given. The processing steps in the production of pharmaceutical waters must be designed to accommodate this variability.

* Drinking water is water complying with US EPA NPDWR or drinking water regulations of EU or Japan or WHO drinking water guidelines.

** Water for sterile APIs or dosage forms must first be rendered sterile if there is not a subsequent sterilization step in the process where used.

*** See guidance in this chapter where waters other than purified water are required by some USP tests and assays.

Note: All water systems should be validated with whatever microbial control is needed to suit the intended purposes of the water.

Figure 2. Selection of water for pharmaceutical purposes.

Hot Purified Water—This water is used in the preparation instructions for *USP–NF* articles and is clearly intended to be *Purified Water* that has been heated to an unspecified temperature in order to enhance solubilization of other ingredients. There is no upper temperature limit for the water (other than being less than 100°), but for each monograph there is an implied lower limit below which the desired solubilization effect would not occur.

Accessed from 167.78.4.19 by James Cumbie (ocean22) on Mon Sep 09 15:04:23 EDT 2013

Nonmonographed Analytical Waters

Both *General Notices and Requirements* and the introductory section to *Reagents, Indicators, and Solutions* clearly state that where the term "water," without qualification or other specification, is indicated for use in analyses, the quality of water shall be *Purified Water.* However, numerous such qualifications do exist. Some of these qualifications involve methods of preparation, ranging from specifying the primary purification step to specifying additional purification. Other qualifications call for specific attributes to be met that might otherwise interfere with analytical processes. In most of these latter cases, the required attribute is not specifically tested. Rather, a further "purification process" is specified that ostensibly allows the water to adequately meet this required attribute.

However, preparation instructions for many reagents were carried forward from the innovator's laboratories to the originally introduced monograph for a particular *USP–NF* article or general test chapter. The quality of the reagent water described in these tests may reflect the water quality designation of the innovator's laboratory. These specific water designations may have originated without the innovator's awareness of the requirement for *Purified Water* in *USP–NF* tests. Regardless of the original reason for the creation of these numerous special analytical waters, it is possible that the attributes of these special waters could now be met by the basic preparation steps and current specifications of *Purified Water.* In some cases, however, some of the cited post-processing steps are still necessary to reliably achieve the required attributes.

Users are not obligated to employ specific and perhaps archaically generated forms of analytical water where alternatives with equal or better quality, availability, or analytical performance may exist. The consistency and reliability for producing these alternative analytical waters should be verified as producing the desired attributes. In addition, any alternative analytical water must be evaluated on an application-by-application basis by the user to ensure its suitability. Following is a summary of the various types of nonmonographed analytical waters that are cited in the *USP–NF.*

Distilled Water—This water is produced by vaporizing liquid water and condensing it in a purer state. It is used primarily as a solvent for reagent preparation, but it is also specified in the execution of other aspects of tests, such as for rinsing an analyte, transferring a test material as a slurry, as a calibration standard or analytical blank, and for test apparatus cleaning. It is also cited as the starting water to be used for making *High-Purity Water.* Because none of the cited uses of this water imply a need for a particular purity attribute that can only be derived by distillation, water meeting the requirements for *Purified Water* derived by other means of purification could be equally suitable where *Distilled Water* is specified.

Freshly Distilled Water—Also called "recently distilled water", it is produced in a similar fashion to *Distilled Water* and should be used shortly after its generation. This implies the need to avoid endotoxin contamination as well as any other adventitious forms of contamination from the air or containers that could arise with prolonged storage. It is used for preparing solutions for subcutaneous test animal injections as well as for a reagent solvent in tests for which there appears to be no particularly high water purity needed that could be ascribable to being "freshly distilled". In the test animal use, the term "freshly distilled" and its testing use imply a chemical, endotoxin, and microbiological purity that could be equally satisfied by *Water for Injection* (though no reference is made to these chemical, endotoxin, or microbial attributes or specific protection from recontamination). For nonanimal uses, water meeting the requirements for *Purified Water* derived by other means of purification and/or storage periods could be equally suitable where "recently distilled water" or *Freshly Distilled Water* is specified.

Deionized Water—This water is produced by an ion-exchange process in which the contaminating ions are replaced with either H^+ or OH^- ions. Similarly to *Distilled Water, Deionized Water* is used primarily as a solvent for reagent preparation, but it is also specified in the execution of other aspects of tests, such as for transferring an analyte within a test procedure, as a calibration standard or analytical blank, and for test apparatus cleaning. Also, none of the cited uses of this water imply any needed purity attribute that can only be achieved by deionization. Therefore, water meeting the requirements for *Purified Water* that is derived by other means of purification could be equally suitable where *Deionized Water* is specified.

Freshly Deionized Water—This water is prepared in a similar fashion to *Deionized Water,* though as the name suggests, it is to be used shortly after its production. This implies the need to avoid any adventitious contamination that could occur upon storage. This water is indicated for use as a reagent solvent as well as for cleaning. Due to the nature of the testing, *Purified Water* could be a reasonable alternative for these applications.

Deionized Distilled Water—This water is produced by deionizing (see *Deionized Water*) *Distilled Water*. This water is used as a reagent in a liquid chromatography test that requires a high purity. Because of the importance of this high purity, water that barely meets the requirements for *Purified Water* may not be acceptable. *High-Purity Water* (see below) could be a reasonable alternative for this water.

Filtered Water—This water is *Purified Water* that has been filtered to remove particles that could interfere with the analysis where this water is specified. It is sometimes used synonymously with *Particle-Free Water* and *Ultra-Filtered Water* and is cited in some monographs and general chapters as well as in *Reagents*. Depending on its location, it is variously defined as water that has been passed through filters rated as 1.2-µm, 0.22-µm, or 0.2-µm; or unspecified pore size. Even though the water names and the filter pore sizes used to produce these waters are inconsistently defined, the use of 0.2-µm pore size filtered *Purified Water* should be universally acceptable for all applications where *Particle-Free Water*, *Filtered Water*, or *Ultra-Filtered Water* are specified.

▪**High-Purity Water**—This water may be prepared by deionizing previously distilled water, and then filtering it through a 0.45-µm rated membrane. This water must have an in-line conductivity of not greater than 0.15 µS/cm (not less than 6.67 Megohm-cm) at 25°. If the water of this purity contacts the atmosphere even briefly as it is being used or drawn from its purification system, its conductivity will immediately increase, by as much as about 1.0 µS/cm, as atmospheric carbon dioxide dissolves in the water and equilibrates to hydrogen and bicarbonate ions. Therefore, if the analytical use requires that water conductivity remains as low as possible or the bicarbonate/carbon dioxide levels be as low as possible, its use should be protected from atmospheric exposure. This

Copyright (c) 2013 The United States Pharmacopeial Convention. All rights reserved.

water is used as a reagent, as a solvent for reagent preparation, and for test apparatus cleaning where less pure waters would not perform acceptably. However, if a user's routinely available *Purified Water* is filtered and meets or exceeds the conductivity specifications of *High-Purity Water*, it could be used in lieu of *High-Purity Water*.■1S (USP36)

Ammonia-Free Water—Functionally, this water must have a negligible ammonia concentration to avoid interference in tests sensitive to ammonia. It has been equated with *High-Purity Water* that has a significantly tighter *Stage 1* conductivity specification than *Purified Water* because of the latter's allowance for a minimal level of ammonium among other ions. However, if the user's *Purified Water* were filtered and met or exceeded the conductivity specifications of *High-Purity Water,* it would contain negligible ammonia or other ions and could be used in lieu of *High-Purity Water.*

Carbon Dioxide-Free Water—The introductory portion of the *Reagents, Indicators, and Solutions* section defines this water as *Purified Water* that has been vigorously boiled for at least 5 minutes, then cooled and protected from absorption of atmospheric carbon dioxide. Because the absorption of carbon dioxide tends to drive down the water pH, most of the uses of *Carbon Dioxide-Free Water* are either associated as a solvent in pH-related or pH-sensitive determinations or as a solvent in carbonate-sensitive reagents or determinations. Another use of this water is for certain optical rotation and color and clarity of solution tests. Though it is possible that this water is indicated for these tests simply because of its purity, it is also possible that the pH effects of carbon dioxide-containing water could interfere with the results of these tests. A third plausible reason that this water is indicated is that outgassing air bubbles might interfere with these photometric-type tests. The boiled water preparation approach will also greatly reduce the concentrations of many other dissolved gases along with carbon dioxide. Therefore, in some of the applications for *Carbon Dioxide-Free Water,* it could be the inadvertent deaeration effect that actually renders this water suitable. In addition to boiling, deionization is perhaps an even more efficient process for removing dissolved carbon dioxide (by drawing the dissolved gas equilibrium toward the ionized state with subsequent removal by the ion-exchange resins). If the starting *Purified Water* is prepared by an efficient deionization process and protected after deionization from exposure to atmospheric air, water that is carbon dioxide-free can be effectively made without the application of heat. However, this deionization process does not deaerate the water, so if *Purified Water* prepared by deionization is considered as a substitute water in a test requiring *Carbon Dioxide-Free Water,* the user must verify that it is not actually water akin to *Deaerated Water* (discussed below) that is needed for the test. As indicated in *High-Purity Water,* even brief contact with the atmosphere can allow small amounts of carbon dioxide to dissolve, ionize, and significantly degrade the conductivity and lower the pH. If the analytical use requires the water to remain as pH-neutral and as carbon dioxide-free as possible, even the analysis should be protected from atmospheric exposure. However, in most applications, atmospheric exposure during testing does not significantly affect its suitability in the test.

Ammonia- and Carbon Dioxide-Free Water—As implied by the name, this water should be prepared by approaches compatible with those mentioned for both *Ammonia-Free Water* and *Carbon Dioxide-Free Water.* Because the carbon dioxide-free attribute requires post-production protection from the atmosphere, it is appropriate to first render the water ammonia-free using the *High-Purity Water* process followed by the boiling and carbon dioxide-protected cooling process. The *High-Purity Water* deionization process for creating *Ammonia-Free Water* will also remove the ions generated from dissolved carbon dioxide and ultimately, by forced equilibration to the ionized state, all the dissolved carbon dioxide. Therefore, depending on its use, an acceptable procedure for making *Ammonia- and Carbon Dioxide-Free Water* could be to transfer and collect *High-Purity Water* in a carbon dioxide intrusion-protected container.

Deaerated Water—This water is *Purified Water* that has been treated to reduce the content of dissolved air by "suitable means". In the *Reagents* section, approaches for boiling, cooling (similar to *Carbon Dioxide-Free Water* but without the atmospheric carbon dioxide protection), and sonication are given as applicable for test uses other than dissolution and drug release testing. Though *Deaerated Water* is not mentioned by name in *Dissolution* ⟨711⟩, suggested methods for deaerating dissolution media (which may be water) include warming to 41°, vacuum filtering through a 0.45-µm rated membrane, and vigorously stirring the filtrate while maintaining the vacuum. This chapter specifically indicates that other validated approaches may be used. In other monographs that also do not mention *Deaerated Water* by name, degassing of water and other reagents is accomplished by sparging with helium. *Deaerated Water* is used in both dissolution testing as well as liquid chromatography applications where outgassing could either interfere with the analysis itself or cause erroneous results due to inaccurate volumetric withdrawals. Applications where ambient temperature water is used for reagent preparation, but the tests are performed at elevated temperatures, are candidates for outgassing effects. If outgassing could interfere with test performance, including chromatographic flow, colorimetric or photometric measurements, or volumetric accuracy, then *Deaerated Water* should probably be used, whether called for in the analysis or not. The above deaeration approaches might not render the water "gas-free". At best, they reduce the dissolved gas concentrations so that outgassing caused by temperature changes is not likely.

Recently Boiled Water—This water may include recently or freshly boiled water (with or without mention of cooling in the title), but cooling prior to use is clearly intended. Occasionally it is necessary to use when hot. *Recently Boiled Water* is specified because it is used in a pH-related test or carbonate-sensitive reagent, in an oxygen-sensitive test or reagent, or in a test where outgassing could interfere with the analysis, such as specific gravity or an appearance test.

Oxygen-Free Water—The preparation of this water is not specifically described in the compendia. Neither is there an oxygen specification or analysis mentioned. However, all uses involve analyses of materials that could be sensitive to oxidation by atmospheric oxygen. Procedures for the removal of dissolved oxygen from solvents, though not necessarily water, are mentioned in *Polarography* ⟨801⟩ and *Spectrophotometry and Light-Scattering* ⟨851⟩. These procedures involve simple sparging of the liquid with an inert gas such as nitrogen or helium, followed by inert gas blanketing to prevent oxygen reabsorption. The sparging times cited range from 5 to 15 minutes to an unspecified period. Some *Purified Water* and *Water for Injection* systems produce water that is maintained in a hot state and that is inert gas blanketed during its preparation and storage and distribution. Though oxygen is poorly soluble in hot water, such water may not be oxygen-free. Whatever procedure is used for removing oxygen should be verified as reliably producing water that is fit for use.

Accessed from 167.78.4.19 by James Cumbie (ocean22) on Mon Sep 09 15:04:23 EDT 2013

Water for BET—This water is also referred to as LAL reagent water. This is often *Water for Injection,* which may have been sterilized. It is free from a level of endotoxin that would yield any detectable reaction or interference with the *Limulus Amoebocyte Lysate* reagent used in the *Bacterial Endotoxins Test* ⟨85⟩.

Organic-Free Water—This water is defined by *Residual Solvents* ⟨467⟩ as producing no significantly interfering gas chromatography peaks. Referenced monographs specify using this water as the solvent for the preparation of standard and test solutions for the *Residual solvents* test.

Lead-Free Water—This water is used as a transferring diluent for an analyte in a *Lead* ⟨251⟩ test. Though no specific instructions are given for its preparation, it must not contain any detectable lead. *Purified Water* should be a suitable substitute for this water.

Chloride-Free Water—This water is specified as the solvent for use in an assay that contains a reactant that precipitates in the presence of chloride. Though no specific preparation instructions are given for this water, its rather obvious attribute is having a very low chloride level in order to be unreactive with this chloride sensitive reactant. *Purified Water* could be used for this water but should be tested to ensure that it is unreactive.

Hot Water—The uses of this water include solvents for achieving or enhancing reagent solubilization, restoring the original volume of boiled or hot solutions, rinsing insoluble analytes free of hot water soluble impurities, solvents for reagent recrystallization, apparatus cleaning, and as a solubility attribute for various *USP–NF* articles. In only one monograph is the temperature of "hot" water specified; so in all the other cases, the water temperature is less important, but should be high enough to achieve the desirable effect. In all cases, the chemical quality of the water is implied to be that of *Purified Water*.

VALIDATION AND QUALIFICATION OF WATER PURIFICATION, STORAGE, AND DISTRIBUTION SYSTEMS

Establishing the dependability of pharmaceutical water purification, storage, and distribution systems requires an appropriate period of monitoring and observation. Ordinarily, few problems are encountered in maintaining the chemical purity of *Purified Water* and *Water for Injection.* Nevertheless, the advent of using conductivity and TOC to define chemical purity has allowed the user to more quantitatively assess the water's chemical purity and its variability as a function of routine pretreatment system maintenance and regeneration. Even the presence of such unit operations as heat exchangers and use point hoses can compromise the chemical quality of water within and delivered from an otherwise well-controlled water system. Therefore, an assessment of the consistency of the water's chemical purity over time must be part of the validation program. However, even with the most well controlled chemical quality, it is often more difficult to consistently meet established microbiological quality criteria owing to phenomena occurring during and after chemical purification. A typical program involves intensive daily sampling and testing of major process points for at least one month after operational criteria have been established for each unit operation, point of use, and sampling point.

An overlooked aspect of water system validation is the delivery of the water to its actual location of use. If this transfer process from the distribution system outlets to the water use locations (usually with hoses) is defined as outside the water system, then this transfer process still needs to be validated to not adversely affect the quality of the water to the extent it becomes unfit for use. Because routine microbial monitoring is performed for the same transfer process and components (e.g., hoses and heat exchangers) as that of routine water use (see *Sampling Considerations*), there is some logic to including this water transfer process within the distribution system validation.

Validation is the process whereby substantiation to a high level of assurance that a specific process will consistently produce a product conforming to an established set of quality attributes is acquired and documented. Prior to and during the very early stages of validation, the critical process parameters and their operating ranges are established. A validation program qualifies and documents the design, installation, operation, and performance of equipment. It begins when the system is defined and moves through several stages: installation qualification (IQ), operational qualification (OQ), and performance qualification (PQ). A graphical representation of a typical water system validation life cycle is shown in *Figure 3*.

Copyright (c) 2013 The United States Pharmacopeial Convention. All rights reserved.

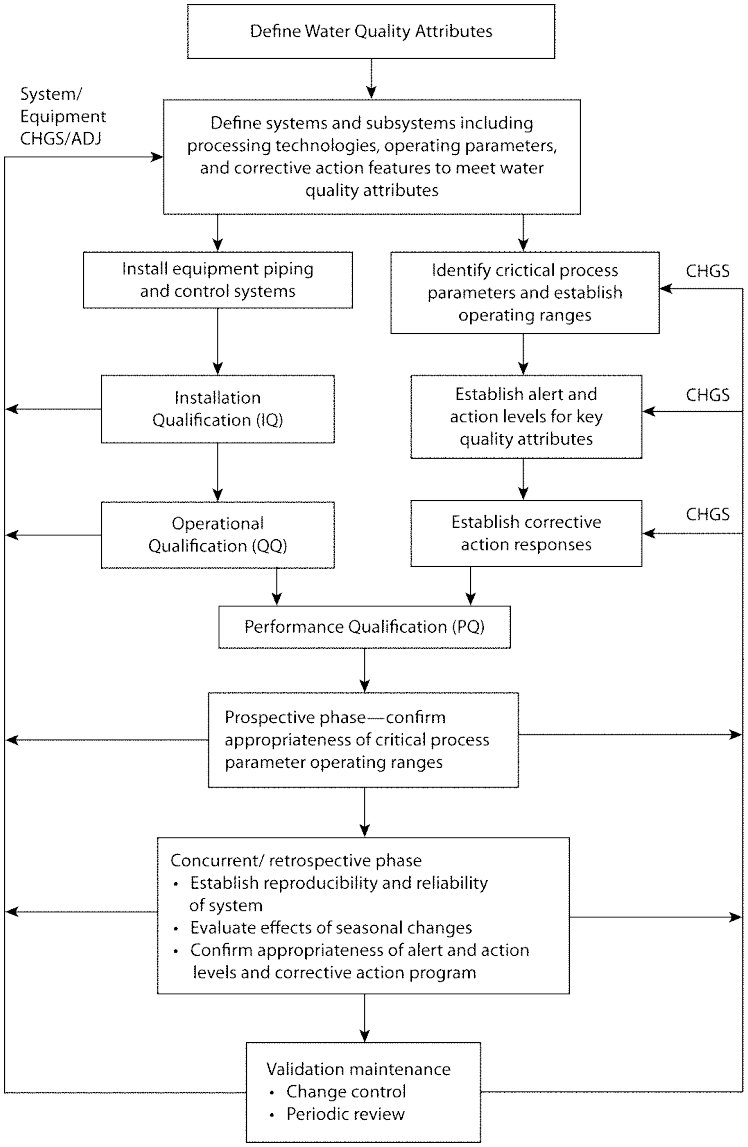

Figure 3. Water system validation life cycle.

A validation plan for a water system typically includes the following steps: (1) establishing standards for quality attributes of the finished water and the source water; (2) defining suitable unit operations and their operating parameters for achieving the desired finished water quality attributes from the available source water; (3) selecting piping, equipment, controls, and monitoring technologies; (4) developing an IQ stage consisting of instrument calibrations, inspections to verify that the drawings accurately depict the final configuration of the water system and, where necessary, special tests to verify that the installation meets the design requirements; (5) developing an OQ stage consisting of tests and inspections to verify that the equipment, system alerts, and controls are operating reliably and that appropriate alert and action levels are established (This phase of qualification may overlap with aspects of the next step.); and (6) developing a prospective PQ stage to confirm the appropriateness of critical process parameter operating ranges (During this phase of validation, alert and action levels for key quality attributes and operating parameters are verified.); (7) assuring the adequacy of ongoing control procedures, e.g., sanitization frequency; (8) supplementing a validation maintenance program (also called continuous validation life cycle) that includes a mechanism to control changes to the water system and establishes and carries out scheduled preventive maintenance including recalibration of instruments (In addition, validation maintenance includes a monitoring program for critical process parameters and a corrective action program.); (9) instituting a schedule for periodic review of the system performance and requalification; and (10) completing protocols and documenting Steps 1 through 9.

PURIFIED WATER AND WATER FOR INJECTION SYSTEMS

The design, installation, and operation of systems to produce *Purified Water* and *Water for Injection* include similar components, control techniques, and procedures. The quality attributes of both waters differ only in the presence of a bacterial endotoxin requirement for *Water for Injection* and in their methods of preparation, at least at the last stage of preparation. The similarities in the quality attributes provide considerable common ground in the design of water systems to meet either requirement. The critical

Accessed from 167.78.4.19 by James Cumbie (ocean22) on Mon Sep 09 15:04:23 EDT 2013

difference is the degree of control of the system and the final purification steps needed to ensure bacterial and bacterial endotoxin removal.

Production of pharmaceutical water employs sequential unit operations (processing steps) that address specific water quality attributes and protect the operation of subsequent treatment steps. A typical evaluation process to select an appropriate water quality for a particular pharmaceutical purpose is shown in the decision tree in *Figure 2.* This diagram may be used to assist in defining requirements for specific water uses and in the selection of unit operations. The final unit operation used to produce *Water for Injection* is limited to distillation or other processes equivalent or superior to distillation in the removal of chemical impurities as well as microorganisms and their components. Distillation has a long history of reliable performance and can be validated as a unit operation for the production of *Water for Injection,* but other technologies or combinations of technologies can be validated as being equivalently effective. Other technologies, such as ultrafiltration following another chemical purification process, may be suitable in the production of *Water for Injection* if they can be shown through validation to be as effective and reliable as distillation. The advent of new materials for older technologies, such as reverse osmosis and ultrafiltration, that allow intermittent or continuous operation at elevated, microbial temperatures, show promise for a valid use in producing *Water for Injection.*

The validation plan should be designed to establish the suitability of the system and to provide a thorough understanding of the purification mechanism, range of operating conditions, required pretreatment, and the most likely modes of failure. It is also necessary to demonstrate the effectiveness of the monitoring scheme and to establish the documentation and qualification requirements for the system's validation maintenance. Trials conducted in a pilot installation can be valuable in defining the operating parameters and the expected water quality and in identifying failure modes. However, qualification of the specific unit operation can only be performed as part of the validation of the installed operational system. The selection of specific unit operations and design characteristics for a water system should take into account the quality of the feed water, the technology chosen for subsequent processing steps, the extent and complexity of the water distribution system, and the appropriate compendial requirements. For example, in the design of a system for *Water for Injection,* the final process (distillation or whatever other validated process is used according to the monograph) must have effective bacterial endotoxin reduction capability and must be validated.

UNIT OPERATIONS CONCERNS

The following is a brief description of selected unit operations and the operation and validation concerns associated with them. Not all unit operations are discussed, nor are all potential problems addressed. The purpose is to highlight issues that focus on the design, installation, operation, maintenance, and monitoring parameters that facilitate water system validation.

Prefiltration

The purpose of prefiltration—also referred to as initial, coarse, or depth filtration—is to remove solid contaminants down to a size of 7 to 10 µm from the incoming source water supply and protect downstream system components from particulates that can inhibit equipment performance and shorten their effective life. This coarse filtration technology utilizes primarily sieving effects for particle capture and a depth of filtration medium that has a high "dirt load" capacity. Such filtration units are available in a wide range of designs and for various applications. Removal efficiencies and capacities differ significantly, from granular bed filters such as multimedia or sand for larger water systems, to depth cartridges for smaller water systems. Unit and system configurations vary widely in type of filtering media and location in the process. Granular or cartridge prefilters are often situated at or near the head of the water pretreatment system prior to unit operations designed to remove the source water disinfectants. This location, however, does not preclude the need for periodic microbial control because biofilm can still proliferate, although at a slower rate in the presence of source water disinfectants. Design and operational issues that may impact performance of depth filters include channeling of the filtering media, blockage from silt, microbial growth, and filtering-media loss during improper backwashing. Control measures involve pressure and flow monitoring during use and backwashing, sanitizing, and replacing filtering media. An important design concern is sizing of the filter to prevent channeling or media loss resulting from inappropriate water flow rates as well as proper sizing to minimize excessively frequent or infrequent backwashing or cartridge filter replacement.

Activated Carbon

Granular activated carbon beds adsorb low molecular weight organic material and oxidizing additives, such as chlorine and chloramine compounds, removing them from the water. They are used to achieve certain quality attributes and to protect against reaction with downstream stainless steel surfaces, resins, and membranes. The chief operating concerns regarding activated carbon beds include the propensity to support bacteria growth, the potential for hydraulic channeling, the organic adsorption capacity, appropriate water flow rates and contact time, the inability to be regenerated in situ, and the shedding of bacteria, endotoxins, organic chemicals, and fine carbon particles. Control measures may involve monitoring water flow rates and differential pressures, sanitizing with hot water or steam, backwashing, testing for adsorption capacity, and frequent replacement of the carbon bed. If the activated carbon bed is intended for organic reduction, it may also be appropriate to monitor influent and effluent TOC. It is important to note that the use of steam for carbon bed sanitization is often incompletely effective due to steam channeling rather than even permeation through the bed. This phenomenon can usually be avoided by using hot water sanitization. It is also important to note that microbial biofilm development on the surface of the granular carbon particles (as well as on other particles such as found in deionizer beds and even multimedia beds) can cause adjacent bed granules to "stick" together. When large masses of granules are agglomerated in this fashion, normal backwashing and bed fluidization flow parameters may not be sufficient to disperse them, leading to ineffective removal of trapped debris, loose biofilm, and penetration of microbial controlling conditions (as well as regenerant chemicals as in the case of agglomerated deionizer resins). Alternative technologies to activated carbon beds can be used in order to avoid their microbial problems, such as disinfectant-neutralizing chemical additives and regenerable organic

Copyright (c) 2013 The United States Pharmacopeial Convention. All rights reserved.

scavenging devices. However, these alternatives do not function by the same mechanisms as activated carbon, may not be as effective at removing disinfectants and some organics, and have a different set of operating concerns and control measures that may be nearly as troublesome as activated carbon beds.

Additives

Chemical additives are used in water systems (a) to control microorganisms by use of sanitants such as chlorine compounds and ozone, (b) to enhance the removal of suspended solids by use of flocculating agents, (c) to remove chlorine compounds, (d) to avoid scaling on reverse osmosis membranes, and (e) to adjust pH for more effective removal of carbonate and ammonia compounds by reverse osmosis. These additives do not constitute "added substances" as long as they are either removed by subsequent processing steps or are otherwise absent from the finished water. Control of additives to ensure a continuously effective concentration and subsequent monitoring to ensure their removal should be designed into the system and included in the monitoring program.

Organic Scavengers

Organic scavenging devices use macroreticular weakly basic anion-exchange resins capable of removing organic material and endotoxins from the water. They can be regenerated with appropriate biocidal caustic brine solutions. Operating concerns are associated with organic scavenging capacity, particulate, chemical and microbiological fouling of the reactive resin surface, flow rate, regeneration frequency, and shedding of resin fragments. Control measures include TOC testing of influent and effluent, backwashing, monitoring hydraulic performance, and using downstream filters to remove resin fines.

Softeners

Water softeners may be located either upstream or downstream of disinfectant removal units. They utilize sodium-based cation-exchange resins to remove water-hardness ions, such as calcium and magnesium, that could foul or interfere with the performance of downstream processing equipment such as reverse osmosis membranes, deionization devices, and distillation units. Water softeners can also be used to remove other lower affinity cations, such as the ammonium ion, that may be released from chloramine disinfectants commonly used in drinking water and which might otherwise carryover through other downstream unit operations. If ammonium removal is one of its purposes, the softener must be located downstream of the disinfectant removal operation, which itself may liberate ammonium from neutralized chloramine disinfectants. Water softener resin beds are regenerated with concentrated sodium chloride solution (brine). Concerns include microorganism proliferation, channeling caused by biofilm agglomeration of resin particles, appropriate water flow rates and contact time, ion-exchange capacity, organic and particulate resin fouling, organic leaching from new resins, fracture of the resin beads, resin degradation by excessively chlorinated water, and contamination from the brine solution used for regeneration. Control measures involve recirculation of water during periods of low water use, periodic sanitization of the resin and brine system, use of microbial control devices (e.g., UV light and chlorine), locating the unit upstream of the disinfectant removal step (if used only for softening), appropriate regeneration frequency, effluent chemical monitoring (e.g., hardness ions and possibly ammonium), and downstream filtration to remove resin fines. If a softener is used for ammonium removal from chloramine-containing source water, then capacity, contact time, resin surface fouling, pH, and regeneration frequency are very important.

Deionization

Deionization (DI), and continuous electrodeionization (CEDI) are effective methods of improving the chemical quality attributes of water by removing cations and anions. DI systems have charged resins that require periodic regeneration with an acid and base. Typically, cationic resins are regenerated with either hydrochloric or sulfuric acid, which replace the captured positive ions with hydrogen ions. Anionic resins are regenerated with sodium or potassium hydroxide, which replace captured negative ions with hydroxide ions. Because free endotoxin is negatively charged, there is some removal of endotoxin achieved by the anionic resin. Both regenerant chemicals are biocidal and offer a measure of microbial control. The system can be designed so that the cation and anion resins are in separate or "twin" beds or they can be mixed together to form a mixed bed. Twin beds are easily regenerated but deionize water less efficiently than mixed beds, which have a considerably more complex regeneration process. Rechargeable resin canisters can also be used for this purpose.

The CEDI system uses a combination of mixed resin, selectively permeable membranes, and an electric charge, providing continuous flow (product and waste concentrate) and continuous regeneration. Water enters both the resin section and the waste (concentrate) section. As it passes through the resin, it is deionized to become product water. The resin acts as a conductor enabling the electrical potential to drive the captured cations and anions through the resin and appropriate membranes for concentration and removal in the waste water stream. The electrical potential also separates the water in the resin (product) section into hydrogen and hydroxide ions. This permits continuous regeneration of the resin without the need for regenerant additives. However, unlike conventional deionization, CEDI units must start with water that is already partially purified because they generally cannot produce *Purified Water* quality when starting with the heavier ion load of unpurified source water.

Concerns for all forms of deionization units include microbial and endotoxin control, chemical additive impact on resins and membranes, and loss, degradation, and fouling of resin. Issues of concern specific to DI units include regeneration frequency and completeness, channeling caused by biofilm agglomeration of resin particles, organic leaching from new resins, complete resin separation for mixed bed regeneration, and mixing air contamination (mixed beds). Control measures vary but typically include recirculation loops, effluent microbial control by UV light, conductivity monitoring, resin testing, microporous filtration of mixing air,

Accessed from 167.78.4.19 by James Cumbie (ocean22) on Mon Sep 09 15:04:23 EDT 2013

microbial monitoring, frequent regeneration to minimize and control microorganism growth, sizing the equipment for suitable water flow and contact time, and use of elevated temperatures. Internal distributor and regeneration piping for mixed bed units should be configured to ensure that regeneration chemicals contact all internal bed and piping surfaces and resins. Rechargeable canisters can be the source of contamination and should be carefully monitored. Full knowledge of previous resin use, minimum storage time between regeneration and use, and appropriate sanitizing procedures are critical factors ensuring proper performance.

Reverse Osmosis

Reverse osmosis (RO) units employ semipermeable membranes. The "pores" of RO membranes are actually intersegmental spaces among the polymer molecules. They are big enough for permeation of water molecules, but too small to permit passage of hydrated chemical ions. However, many factors including pH, temperature, and differential pressure across the membrane affect the selectivity of this permeation. With the proper controls, RO membranes can achieve chemical, microbial, and endotoxin quality improvement. The process streams consist of supply water, product water (permeate), and wastewater (reject). Depending on source water, pretreatment and system configuration variations and chemical additives may be necessary to achieve desired performance and reliability.

A major factor affecting RO performance is the permeate recovery rate, that is, the amount of the water passing through the membrane compared to the amount rejected. This is influenced by the several factors, but most significantly by the pump pressure. Recoveries of 75% are typical, and can accomplish a 1 to 2 log purification of most impurities. For most feed waters, this is usually not enough to meet *Purified Water* conductivity specifications. A second pass of this permeate water through another RO stage usually achieves the necessary permeate purity if other factors such as pH and temperature have been appropriately adjusted and the ammonia from chloraminated source water has been previously removed. Increasing recoveries with higher pressures in order to reduce the volume of reject water will lead to reduced permeate purity. If increased pressures are needed over time to achieve the same permeate flow, this is an indication of partial membrane blockage that needs to be corrected before it becomes irreversibly fouled, and expensive membrane replacement is the only option.

Other concerns associated with the design and operation of RO units include membrane materials that are extremely sensitive to sanitizing agents and to particulate, chemical, and microbial membrane fouling; membrane and seal integrity; the passage of dissolved gases, such as carbon dioxide and ammonia; and the volume of wastewater, particularly where water discharge is tightly regulated by local authorities. Failure of membrane or seal integrity will result in product water contamination. Methods of control involve suitable pretreatment of the influent water stream, appropriate membrane material selection, integrity challenges, membrane design and heat tolerance, periodic sanitization, and monitoring of differential pressures, conductivity, microbial levels, and TOC.

The development of RO units that can tolerate sanitizing water temperatures as well as operate efficiently and continuously at elevated temperatures has added greatly to their microbial control and to the avoidance of biofouling. RO units can be used alone or in combination with DI and CEDI units as well as ultrafiltration for operational and quality enhancements.

Ultrafiltration

Ultrafiltration is a technology most often employed in pharmaceutical water systems for removing endotoxins from a water stream. It can also use semipermeable membranes, but unlike RO, these typically use polysulfone membranes whose intersegmental "pores" have been purposefully exaggerated during their manufacture by preventing the polymer molecules from reaching their smaller equilibrium proximities to each other. Depending on the level of equilibrium control during their fabrication, membranes with differing molecular weight "cutoffs" can be created such that molecules with molecular weights above these cutoffs ratings are rejected and cannot penetrate the filtration matrix.

Ceramic ultrafilters are another molecular sieving technology. Ceramic ultrafilters are self supporting and extremely durable, backwashable, chemically cleanable, and steam sterilizable. However, they may require higher operating pressures than membrane type ultrafilters.

All ultrafiltration devices work primarily by a molecular sieving principle. Ultrafilters with molecular weight cutoff ratings in the range of 10,000 to 20,000 Da are typically used in water systems for removing endotoxins. This technology may be appropriate as an intermediate or final purification step. Similar to RO, successful performance is dependent upon pretreatment of the water by upstream unit operations.

Issues of concern for ultrafilters include compatibility of membrane material with heat and sanitizing agents, membrane integrity, fouling by particles and microorganisms, and seal integrity. Control measures involve filtration medium selection, sanitization, flow design (dead end vs. tangential), integrity challenges, regular cartridge changes, elevated feed water temperature, and monitoring TOC and differential pressure. Additional flexibility in operation is possible based on the way ultrafiltration units are arranged such as in a parallel or series configurations. Care should be taken to avoid stagnant water conditions that could promote microorganism growth in back-up or standby units.

Charge-Modified Filtration

Charge-modified filters are usually microbially retentive filters that are treated during their manufacture to have a positive charge on their surfaces. Microbial retentive filtration will be described in a subsequent section, but the significant feature of these membranes is their electrostatic surface charge. Such charged filters can reduce endotoxin levels in the fluids passing through them by their adsorption (owing to endotoxin's negative charge) onto the membrane surfaces. Though ultrafilters are more often employed as a unit operation for endotoxin removal in water systems, charge-modified filters may also have a place in endotoxin removal particularly where available upstream pressures are not sufficient for ultrafiltration and for a single, relatively short term use. Charge-modified filters may be difficult to validate for long-term or large-volume endotoxin retention. Even though their purified standard

Copyright (c) 2013 The United States Pharmacopeial Convention. All rights reserved.

endotoxin retention can be well characterized, their retention capacity for "natural" endotoxins is difficult to gauge. Nevertheless, utility could be demonstrated and validated as short-term, single-use filters at points of use in water systems that are not designed for endotoxin control or where only an endotoxin "polishing" (removal of only slight or occasional endotoxin levels) is needed. Control and validation concerns include volume and duration of use, flow rate, water conductivity and purity, and constancy and concentration of endotoxin levels being removed. All of these factors may have to be evaluated and challenged prior to using this approach, making this a difficult-to-validate application. Even so, there may still be a possible need for additional backup endotoxin testing both upstream and downstream of the filter.

Microbial-Retentive Filtration

Microbial-retentive membrane filters have experienced an evolution of understanding in the past decade that has caused previously held theoretical retention mechanisms to be reconsidered. These filters have a larger effective "pore size" than ultrafilters and are intended to prevent the passage of microorganisms and similarly sized particles without unduly restricting flow. This type of filtration is widely employed within water systems for filtering the bacteria out of both water and compressed gases as well as for vent filters on tanks and stills and other unit operations. However, the properties of the water system microorganisms seem to challenge a filter's microbial retention from water with phenomena absent from other aseptic filtration applications, such as filter sterilizing of pharmaceutical formulations prior to packaging. In the latter application, sterilizing grade filters are generally considered to have an assigned rating of 0.2 or 0.22 µm. This rather arbitrary rating is associated with filters that have the ability to retain a high level challenge of a specially prepared inoculum of *Brevundimonas* (formerly *Pseudomonas*) *diminuta.* This is a small microorganism originally isolated decades ago from a product that had been "filter sterilized" using a 0.45-µm rated filter. Further study revealed that a percentage of cells of this microorganism could reproducibly penetrate the 0.45-µm sterilizing filters. Through historic correlation of *B. diminuta* retaining tighter filters, thought to be twice as good as 0.45-µm filter, assigned ratings of 0.2 or 0.22 µm with their successful use in product solution filter sterilization, both this filter rating and the associated high level *B. diminuta* challenge have become the current benchmarks for sterilizing filtration. New evidence now suggests that for microbial-retentive filters used for pharmaceutical water, *B. diminuta* may not be the best model microorganism.

An archaic understanding of microbial retentive filtration would lead one to equate a filter's rating with the false impression of a simple sieve or screen that absolutely retains particles sized at or above the filter's rating. A current understanding of the mechanisms involved in microbial retention and the variables that can affect those mechanisms has yielded a far more complex interaction of phenomena than previously understood. A combination of simple sieve retention and surface adsorption are now known to contribute to microbial retention.

The following all interact to create some unusual and surprising retention phenomena for water system microorganisms: the variability in the range and average pore sizes created by the various membrane fabrication processes, the variability of the surface chemistry and three-dimensional structure related to the different polymers used in these filter matrices, and the size and surface properties of the microorganism intended to be retained by the filters. *B. diminuta* may not be the best challenge microorganisms for demonstrating bacterial retention for 0.2- to 0.22-µm rated filters for use in water systems because it appears to be more easily retained by these filters than some water system flora. The well-documented appearance of water system microorganisms on the downstream sides of some 0.2- to 0.22-µm rated filters after a relatively short period of use seems to support that some penetration phenomena are at work. Unknown for certain is if this downstream appearance is caused by a "blow-through" or some other pass-through phenomenon as a result of tiny cells or less cell "stickiness", or by a "growth through" phenomenon as a result of cells hypothetically replicating their way through the pores to the downstream side. Whatever is the penetration mechanism, 0.2- to 0.22-µm rated membranes may not be the best choice for some water system uses.

Microbial retention success in water systems has been reported with the use of some manufacturers' filters arbitrarily rated as 0.1 µm. There is general agreement that for a given manufacturer, their 0.1-µm rated filters are tighter than their 0.2- to 0.22-µm rated filters. However, comparably rated filters from different manufacturers in water filtration applications may not perform equivalently owing to the different filter fabrication processes and the nonstandardized microbial retention challenge processes currently used for defining the 0.1-µm filter rating. It should be noted that use of 0.1-µm rated membranes generally results in a sacrifice in flow rate compared to 0.2- to 0.22-µm membranes, so whatever membranes are chosen for a water system application, the user must verify that the membranes are suitable for their intended application, use period, and use process, including flow rate.

For microbial retentive gas filtrations, the same sieving and adsorptive retention phenomena are at work as in liquid filtration, but the adsorptive phenomenon is enhanced by additional electrostatic interactions between particles and filter matrix. These electrostatic interactions are so strong that particle retention for a given filter rating is significantly more efficient in gas filtration than in water or product solution filtrations. These additional adsorptive interactions render filters rated at 0.2 to 0.22 µm unquestionably suitable for microbial retentive gas filtrations. When microbially retentive filters are used in these applications, the membrane surface is typically hydrophobic (non-wettable by water). A significant area of concern for gas filtration is blockage of tank vents by condensed water vapor, which can cause mechanical damage to the tank. Control measures include electrical or steam tracing and a self-draining orientation of vent filter housings to prevent accumulation of vapor condensate. However, a continuously high filter temperature will take an oxidative toll on polypropylene components of the filter, so sterilization of the unit prior to initial use, and periodically thereafter, as well as regular visual inspections, integrity tests, and changes are recommended control methods.

In water applications, microbial retentive filters may be used downstream of unit operations that tend to release microorganisms or upstream of unit operations that are sensitive to microorganisms. Microbial retentive filters may also be used to filter water feeding the distribution system. It should be noted that regulatory authorities allow the use of microbial retentive filters within distribution systems or even at use points if they have been properly validated and are appropriately maintained. A point-of-use filter should only be intended to "polish" the microbial quality of an otherwise well-maintained system and not to serve as the primary microbial control device. The efficacy of system microbial control measures can only be assessed by sampling the water upstream of the filters. As an added measure of protection, in-line UV lamps, appropriately sized for the flow rate (see *Sanitization*), may be used

Accessed from 167.78.4.19 by James Cumbie (ocean22) on Mon Sep 09 15:04:23 EDT 2013

just upstream of microbial retentive filters to inactivate microorganisms prior to their capture by the filter. This tandem approach tends to greatly delay potential microbial penetration phenomena and can substantially extend filter service life.

Ultraviolet Light

The use of low-pressure UV lights that emit a 254-nm wavelength for microbial control is discussed under *Sanitization,* but the application of UV light in chemical purification is also emerging. This 254-nm wavelength is also useful in the destruction of ozone. With intense emissions at wavelengths around 185 nm (as well as at 254 nm), medium pressure UV lights have demonstrated utility in the destruction of the chlorine-containing disinfectants used in source water as well as for interim stages of water pretreatment. High intensities of this wavelength alone or in combination with other oxidizing sanitants, such as hydrogen peroxide, have been used to lower TOC levels in recirculating distribution systems. The organics are typically converted to carbon dioxide, which equilibrates to bicarbonate, and incompletely oxidized carboxylic acids, both of which can easily be removed by polishing ion-exchange resins. Areas of concern include adequate UV intensity and residence time, gradual loss of UV emissivity with bulb age, gradual formation of UV-absorbing film at the water contact surface, incomplete photodegradation during unforeseen source water hyperchlorination, release of ammonia from chloramine photodegradation, unapparent UV bulb failure, and conductivity degradation in distribution systems using 185-nm UV lights. Control measures include regular inspection or emissivity alarms to detect bulb failures or film occlusions, regular UV bulb sleeve cleaning and wiping, downstream chlorine detectors, downstream polishing deionizers, and regular (approximately yearly) bulb replacement.

Distillation

Distillation units provide chemical and microbial purification via thermal vaporization, mist elimination, and water vapor condensation. A variety of designs is available including single effect, multiple effect, and vapor compression. The latter two configurations are normally used in larger systems because of their generating capacity and efficiency. Distilled water systems require different feed water controls than required by membrane systems. For distillation, due consideration must be given to prior removal of hardness and silica impurities that may foul or corrode the heat transfer surfaces as well as prior removal of those impurities that could volatize and condense along with the water vapor. In spite of general perceptions, even the best distillation process cannot afford absolute removal of contaminating ions and endotoxin. Most stills are recognized as being able to accomplish at least a 3 to 4 log reduction in these impurity concentrations. Areas of concern include carry-over of volatile organic impurities such as trihalomethanes (see *Source and Feed Water Considerations*) and gaseous impurities such as ammonia and carbon dioxide, faulty mist elimination, evaporator flooding, inadequate blowdown, stagnant water in condensers and evaporators, pump and compressor seal design, pinhole evaporator and condenser leaks, and conductivity (quality) variations during start-up and operation.

Methods of control may involve preliminary decarbonation steps to remove both dissolved carbon dioxide and other volatile or noncondensable impurities; reliable mist elimination to minimize feedwater droplet entrainment; visual or automated high water level indication to detect boiler flooding and boil over; use of sanitary pumps and compressors to minimize microbial and lubricant contamination of feedwater and condensate; proper drainage during inactive periods to minimize microbial growth and accumulation of associated endotoxin in boiler water; blow down control to limit the impurity concentration effect in the boiler to manageable levels; on-line conductivity sensing with automated diversion to waste to prevent unacceptable water upon still startup or still malfunction from getting into the finished water distribute system; and periodic integrity testing for pinhole leaks to routinely assure condensate is not compromised by nonvolatized source water contaminants.

Storage Tanks

Storage tanks are included in water distribution systems to optimize processing equipment capacity. Storage also allows for routine maintenance within the pretreatment train while maintaining continuous supply to meet manufacturing needs. Design and operation considerations are needed to prevent or minimize the development of biofilm, to minimize corrosion, to aid in the use of chemical sanitization of the tanks, and to safeguard mechanical integrity. These considerations may include using closed tanks with smooth interiors, the ability to spray the tank headspace using sprayballs on recirculating loop returns, and the use of heated, jacketed/insulated tanks. This minimizes corrosion and biofilm development and aids in thermal and chemical sanitization. Storage tanks require venting to compensate for the dynamics of changing water levels. This can be accomplished with a properly oriented and heat-traced filter housing fitted with a hydrophobic microbial retentive membrane filter affixed to an atmospheric vent. Alternatively, an automatic membrane-filtered compressed gas blanketing system may be used. In both cases, rupture disks equipped with a rupture alarm device should be used as a further safeguard for the mechanical integrity of the tank. Areas of concern include microbial growth or corrosion due to irregular or incomplete sanitization and microbial contamination from unalarmed rupture disk failures caused by condensate-occluded vent filters.

Distribution Systems

Distribution system configuration should allow for the continuous flow of water in the piping by means of recirculation. Use of nonrecirculating, dead-end, or one-way systems or system segments should be avoided whenever possible. If not possible, these systems should be periodically flushed and more closely monitored. Experience has shown that continuously recirculated systems are easier to maintain. Pumps should be designed to deliver fully turbulent flow conditions to facilitate thorough heat distribution (for hot water sanitized systems) as well as thorough chemical sanitant distribution. Turbulent flow also appear to either retard the development of biofilms or reduce the tendency of those biofilms to shed bacteria into the water. If redundant pumps are used, they should be configured and used to avoid microbial contamination of the system.

Copyright (c) 2013 The United States Pharmacopeial Convention. All rights reserved.

Components and distribution lines should be sloped and fitted with drain points so that the system can be completely drained. In stainless steel distribution systems where the water is circulated at a high temperature, dead legs and low-flow conditions should be avoided, and valved tie-in points should have length-to-diameter ratios of six or less. If constructed of heat tolerant plastic, this ratio should be even less to avoid cool points where biofilm development could occur. In ambient temperature distribution systems, particular care should be exercised to avoid or minimize dead leg ratios of any size and provide for complete drainage. If the system is intended to be steam sanitized, careful sloping and low-point drainage is crucial to condensate removal and sanitization success. If drainage of components or distribution lines is intended as a microbial control strategy, they should also be configured to be completely dried using dry compressed air (or nitrogen if appropriate employee safety measures are used). Drained but still moist surfaces will still support microbial proliferation. Water exiting from the distribution system should not be returned to the system without first passing through all or a portion of the purification train.

The distribution design should include the placement of sampling valves in the storage tank and at other locations, such as in the return line of the recirculating water system. Where feasible, the primary sampling sites for water should be the valves that deliver water to the points of use. Direct connections to processes or auxiliary equipment should be designed to prevent reverse flow into the controlled water system. Hoses and heat exchangers that are attached to points of use in order to deliver water for a particular use must not chemically or microbiologically degrade the water quality. The distribution system should permit sanitization for microorganism control. The system may be continuously operated at sanitizing conditions or sanitized periodically.

INSTALLATION, MATERIALS OF CONSTRUCTION, AND COMPONENT SELECTION

Installation techniques are important because they can affect the mechanical, corrosive, and sanitary integrity of the system. Valve installation attitude should promote gravity drainage. Pipe supports should provide appropriate slopes for drainage and should be designed to support the piping adequately under worst-case thermal and flow conditions. The methods of connecting system components including units of operation, tanks, and distribution piping require careful attention to preclude potential problems. Stainless steel welds should provide reliable joints that are internally smooth and corrosion-free. Low-carbon stainless steel, compatible wire filler, where necessary, inert gas, automatic welding machines, and regular inspection and documentation help to ensure acceptable weld quality. Follow-up cleaning and passivation are important for removing contamination and corrosion products and to re-establish the passive corrosion resistant surface. Plastic materials can be fused (welded) in some cases and also require smooth, uniform internal surfaces. Adhesive glues and solvents should be avoided due to the potential for voids and extractables. Mechanical methods of joining, such as flange fittings, require care to avoid the creation of offsets, gaps, penetrations, and voids. Control measures include good alignment, properly sized gaskets, appropriate spacing, uniform sealing force, and the avoidance of threaded fittings.

Materials of construction should be selected to be compatible with control measures such as sanitizing, cleaning, and passivating. Temperature rating is a critical factor in choosing appropriate materials because surfaces may be required to handle elevated operating and sanitization temperatures. Should chemicals or additives be used to clean, control, or sanitize the system, materials resistant to these chemicals or additives must be utilized. Materials should be capable of handling turbulent flow and elevated velocities without wear of the corrosion-resistant film such as the passive chromium oxide surface of stainless steel. The finish on metallic materials such as stainless steel, whether it is a refined mill finish, polished to a specific grit, or an electropolished treatment, should complement system design and provide satisfactory corrosion and microbial activity resistance as well as chemical sanitizability. Auxiliary equipment and fittings that require seals, gaskets, diaphragms, filter media, and membranes should exclude materials that permit the possibility of extractables, shedding, and microbial activity. Insulating materials exposed to stainless steel surfaces should be free of chlorides to avoid the phenomenon of stress corrosion cracking that can lead to system contamination and the destruction of tanks and critical system components.

Specifications are important to ensure proper selection of materials and to serve as a reference for system qualification and maintenance. Information such as mill reports for stainless steel and reports of composition, ratings, and material handling capabilities for nonmetallic substances should be reviewed for suitability and retained for reference. Component (auxiliary equipment) selection should be made with assurance that it does not create a source of contamination intrusion. Heat exchangers should be constructed to prevent leakage of heat transfer medium to the pharmaceutical water and, for heat exchanger designs where prevention may fail, there should be a means to detect leakage. Pumps should be of sanitary design with seals that prevent contamination of the water. Valves should have smooth internal surfaces with the seat and closing device exposed to the flushing action of water, such as occurs in diaphragm valves. Valves with pocket areas or closing devices (e.g., ball, plug, gate, globe) that move into and out of the flow area should be avoided.

SANITIZATION

Microbial control in water systems is achieved primarily through sanitization practices. Systems can be sanitized using either thermal or chemical means. Thermal approaches to system sanitization include periodic or continuously circulating hot water and the use of steam. Temperatures of at least 80° are most commonly used for this purpose, but continuously recirculating water of at least 65° has also been used effectively in insulated stainless steel distribution systems when attention is paid to uniformity and distribution of such self-sanitizing temperatures. These techniques are limited to systems that are compatible with the higher temperatures needed to achieve sanitization. Although thermal methods control biofilm development by either continuously inhibiting their growth or, in intermittent applications, by killing the microorganisms within biofilms, they are not effective in removing established biofilms. Killed but intact biofilms can become a nutrient source for rapid biofilm regrowth after the sanitizing conditions are removed or halted. In such cases, a combination of routine thermal and periodic supplementation with chemical sanitization might be more effective. The more frequent the thermal sanitization, the more likely biofilm development and regrowth can be eliminated. Chemical methods, where compatible, can be used on a wider variety of construction materials. These methods typically

Accessed from 167.78.4.19 by James Cumbie (ocean22) on Mon Sep 09 15:04:23 EDT 2013

employ oxidizing agents such as halogenated compounds, hydrogen peroxide, ozone, peracetic acid, or combinations thereof. Halogenated compounds are effective sanitizers but are difficult to flush from the system and may leave biofilms intact. Compounds such as hydrogen peroxide, ozone, and peracetic acid oxidize bacteria and biofilms by forming reactive peroxides and free radicals (notably hydroxyl radicals). The short half-life of ozone in particular, and its limitation on achievable concentrations require that it be added continuously during the sanitization process. Hydrogen peroxide and ozone rapidly degrade to water and oxygen; peracetic acid degrades to acetic acid in the presence of UV light. In fact, ozone's ease of degradation to oxygen using 254-nm UV lights at use points allow it to be most effectively used on a continuous basis to provide continuously sanitizing conditions.

In-line UV light at a wavelength of 254 nm can also be used to continuously "sanitize" water circulating in the system, but these devices must be properly sized for the water flow. Such devices inactivate a high percentage (but not 100%) of microorganisms that flow through the device but cannot be used to directly control existing biofilm upstream or downstream of the device. However, when coupled with conventional thermal or chemical sanitization technologies or located immediately upstream of a microbially retentive filter, it is most effective and can prolong the interval between system sanitizations.

It is important to note that microorganisms in a well-developed biofilm can be extremely difficult to kill, even by aggressive oxidizing biocides. The less developed and therefore thinner the biofilm, the more effective the biocidal action. Therefore, optimal biocide control is achieved by frequent biocide use that does not allow significant biofilm development between treatments.

Sanitization steps require validation to demonstrate the capability of reducing and holding microbial contamination at acceptable levels. Validation of thermal methods should include a heat distribution study to demonstrate that sanitization temperatures are achieved throughout the system, including the body of use point valves. Validation of chemical methods require demonstrating adequate chemical concentrations throughout the system, exposure to all wetted surfaces, including the body of use point valves, and complete removal of the sanitant from the system at the completion of treatment. Methods validation for the detection and quantification of residues of the sanitant or its objectionable degradants is an essential part of the validation program. The frequency of sanitization should be supported by, if not triggered by, the results of system microbial monitoring. Conclusions derived from trend analysis of the microbiological data should be used as the alert mechanism for maintenance. The frequency of sanitization should be established in such a way that the system operates in a state of microbiological control and does not routinely exceed alert levels (see *Alert and Action Levels and Specifications*).

OPERATION, MAINTENANCE, AND CONTROL

A preventive maintenance program should be established to ensure that the water system remains in a state of control. The program should include (1) procedures for operating the system, (2) monitoring programs for critical quality attributes and operating conditions including calibration of critical instruments, (3) schedule for periodic sanitization, (4) preventive maintenance of components, and (5) control of changes to the mechanical system and to operating conditions.

Operating Procedures—Procedures for operating the water system and performing routine maintenance and corrective action should be written, and they should also define the point when action is required. The procedures should be well documented, detail the function of each job, assign who is responsible for performing the work, and describe how the job is to be conducted. The effectiveness of these procedures should be assessed during water system validation.

Monitoring Program—Critical quality attributes and operating parameters should be documented and monitored. The program may include a combination of in-line sensors or automated instruments (e.g., for TOC, conductivity, hardness, and chlorine), automated or manual documentation of operational parameters (such as flow rates or pressure drop across a carbon bed, filter, or RO unit), and laboratory tests (e.g., total microbial counts). The frequency of sampling, the requirement for evaluating test results, and the necessity for initiating corrective action should be included.

Sanitization—Depending on system design and the selected units of operation, routine periodic sanitization may be necessary to maintain the system in a state of microbial control. Technologies for sanitization are described above.

Preventive Maintenance—A preventive maintenance program should be in effect. The program should establish what preventive maintenance is to be performed, the frequency of maintenance work, and how the work should be documented.

Change Control—The mechanical configuration and operating conditions must be controlled. Proposed changes should be evaluated for their impact on the whole system. The need to requalify the system after changes are made should be determined. Following a decision to modify a water system, the affected drawings, manuals, and procedures should be revised.

SAMPLING CONSIDERATIONS

Water systems should be monitored at a frequency that is sufficient to ensure that the system is in control and continues to produce water of acceptable quality. Samples should be taken from representative locations within the processing and distribution system. Established sampling frequencies should be based on system validation data and should cover critical areas including unit operation sites. The sampling plan should take into consideration the desired attributes of the water being sampled. For example, systems for *Water for Injection* because of their more critical microbiological requirements, may require a more rigorous sampling frequency.

Analyses of water samples often serve two purposes: in-process control assessments and final quality control assessments. In-process control analyses are usually focused on the attributes of the water within the system. Quality control is primarily concerned with the attributes of the water delivered by the system to its various uses. The latter usually employs some sort of transfer device, often a flexible hose, to bridge the gap between the distribution system use-point valve and the actual location of water use. The issue of sample collection location and sampling procedure is often hotly debated because of the typically mixed use of the data generated from the samples, for both in-process control and quality control. In these single sample and mixed data use situations, the worst-case scenario should be utilized. In other words, samples should be collected from use points using the same delivery

Copyright (c) 2013 The United States Pharmacopeial Convention. All rights reserved.

devices, such as hoses, and procedures, such as preliminary hose or outlet flushing, as are employed by production from those use points. Where use points per se cannot be sampled, such as hard-piped connections to equipment, special sampling ports may be used. In all cases, the sample must represent as closely as possible the quality of the water used in production. If a point of use filter is employed, sampling of the water prior to and after the filter is needed because the filter will mask the microbial control achieved by the normal operating procedures of the system.

Samples containing chemical sanitizing agents require neutralization prior to microbiological analysis. Samples for microbiological analysis should be tested immediately, or suitably refrigerated to preserve the original microbial attributes until analysis can begin. Samples of flowing water are only indicative of the concentration of planktonic (free floating) microorganisms present in the system. Biofilm microorganisms (those attached to water system surfaces) are usually present in greater numbers and are the source of the planktonic population recovered from grab samples. Microorganisms in biofilms represent a continuous source of contamination and are difficult to directly sample and quantify. Consequently, the planktonic population is usually used as an indicator of system contamination levels and is the basis for system *Alert* and *Action Levels*. The consistent appearance of elevated planktonic levels is usually an indication of advanced biofilm development in need of remedial control. System control and sanitization are key in controlling biofilm formation and the consequent planktonic population.

Sampling for chemical analyses is also done for in-process control and for quality control purposes. However, unlike microbial analyses, chemical analyses can be and often are performed using on-line instrumentation. Such on-line testing has unequivocal in-process control purposes because it is not performed on the water delivered from the system. However, unlike microbial attributes, chemical attributes are usually not significantly degraded by hoses. Therefore, through verification testing, it may be possible to show that the chemical attributes detected by the on-line instrumentation (in-process testing) are equivalent to those detected at the ends of the use point hoses (quality control testing). This again creates a single sample and mixed data use scenario. It is far better to operate the instrumentation in a continuous mode, generating large volumes of in-process data, but only using a defined small sampling of that data for QC purposes. Examples of acceptable approaches include using highest values for a given period, highest time-weighted average for a given period (from fixed or rolling sub-periods), or values at a fixed daily time. Each approach has advantages and disadvantages relative to calculation complexity and reflection of continuous quality, so the user must decide which approach is most suitable or justifiable.

Change to read:

CHEMICAL CONSIDERATIONS

The chemical attributes of *Purified Water* and *Water for Injection* in effect prior to *USP 23* were specified by a series of chemistry tests for various specific and nonspecific attributes with the intent of detecting chemical species indicative of incomplete or inadequate purification. While these methods could have been considered barely adequate to control the quality of these waters, they nevertheless stood the test of time. This was partly because the operation of water systems was, and still is, based on on-line conductivity measurements and specifications generally thought to preclude the failure of these archaic chemistry attribute tests.

USP moved away from these chemical attribute tests to contemporary analytical technologies for the bulk waters *Purified Water* and *Water for Injection.* The intent was to upgrade the analytical technologies without tightening the quality requirements. The two contemporary analytical technologies employed were TOC and conductivity. The TOC test replaced the test for *Oxidizable substances* that primarily targeted organic contaminants. A multistaged *Conductivity* test which detects ionic (mostly inorganic) contaminants replaced, with the exception of the test for *Heavy metals,* all of the inorganic chemical tests (i.e., *Ammonia, Calcium, Carbon dioxide, Chloride, Sulfate*).

Replacing the heavy metals attribute was considered unnecessary because (a) the source water specifications (found in the NPDWR) for individual *Heavy metals* were tighter than the approximate limit of detection of the *Heavy metals* test for *USP XXII Water for Injection* and *Purified Water* (approximately 0.1 ppm), (b) contemporary water system construction materials do not leach heavy metal contaminants, and (c) test results for this attribute have uniformly been negative—there has not been a confirmed occurrence of a singular test failure (failure of only the *Heavy metals* test with all other attributes passing) since the current heavy metal drinking water standards have been in place. Nevertheless, since the presence of heavy metals in *Purified Water* or *Water for Injection* could have dire consequences, its absence should at least be documented during new water system commissioning and validation or through prior test results records.

Total solids and *pH* were the only tests not covered by conductivity testing. The test for *Total solids* was considered redundant because the nonselective tests of conductivity and TOC could detect most chemical species other than silica, which could remain undetected in its colloidal form. Colloidal silica in *Purified Water* and *Water for Injection* is easily removed by most water pretreatment steps and even if present in the water, constitutes no medical or functional hazard except under extreme and rare situations. In such extreme situations, other attribute extremes are also likely to be detected. It is, however, the user's responsibility to ensure fitness for use. If silica is a significant component in the source water, and the purification unit operations could be operated or fail and selectively allow silica to be released into the finished water (in the absence of co-contaminants detectable by conductivity), then either silica-specific or a total solids type testing should be utilized to monitor and control this rare problem.

The *pH* attribute was eventually recognized to be redundant to the conductivity test (which included *pH* as an aspect of the test and specification); therefore, *pH* was dropped as a separate attribute test.

The rationale used by USP to establish its *Purified Water* and *Water for Injection* conductivity specifications took into consideration the conductivity contributed by the two least conductive former attributes of *Chloride* and *Ammonia,* thereby precluding their failure had those wet chemistry tests been performed. In essence, the *Stage 3* conductivity specifications (see *Water Conductivity, Bulk Water* ⟨645⟩) were established from the sum of the conductivities of the limit concentrations of chloride ions (from pH 5.0 to 6.2) and ammonia ions (from pH 6.3 to 7.0), plus the unavoidable contribution of other conductivity-contributing ions from water (H^+ and

Accessed from 167.78.4.19 by James Cumbie (ocean22) on Mon Sep 09 15:04:23 EDT 2013

OH^-), dissolved atmospheric CO_2 (as HCO_3^-), and an electro-balancing quantity of either Na^+ or Cl^-, depending on the pH-induced ionic imbalance (see *Table 1*). The *Stage 2* conductivity specification is the lowest value on this table, 2.1 µS/cm. The *Stage 1* specifications, designed primarily for on-line measurements, were derived essentially by summing the lowest values in the contributing ion columns for each of a series of tables similar to *Table 1*, created for each 5° increment between 0° and 100°. For example purposes, the italicized values in *Table 1*, the conductivity data table for 25°, were summed to yield a conservative value of 1.3 µS/cm, the *Stage 1* specification for a nontemperature compensated, nonatmosphere equilibrated water sample that actually had a measured temperature of 25° to 29°. Each 5° increment in the table was similarly treated to yield the individual values listed in the table of *Stage 1* specifications (see *Water Conductivity, Bulk Water* ⟨645⟩).

As stated above, this rather radical change to utilizing a conductivity attribute as well as the inclusion of a TOC attribute allowed for on-line measurements. This was a major philosophical change and allowed major savings to be realized by industry. The TOC and conductivity tests can also be performed "off-line" in the laboratories using collected samples, though sample collection tends to introduce opportunities for adventitious contamination that can cause false high readings. The collection of on-line data is not, however, without challenges. The continuous readings tend to create voluminous amounts of data where before only a single data point was available. As stated under *Sampling Considerations*, continuous in-process data is excellent for understanding how a water system performs during all of its various usage and maintenance events in real time, but is too much data for QC purposes. Therefore, a justifiable fraction or averaging of the data can be used that is still representative of the overall water quality being used.

Packaged/sterile waters present a particular dilemma relative to the attributes of conductivity and TOC. The package itself is the source of chemicals (inorganics and organics) that leach over time into the packaged water and can easily be detected by the conductivity and TOC tests. The irony of organic leaching from plastic packaging is that before the advent of bulk water TOC testing when the *Oxidizable substances* test was the only "organic purity" test for both bulk and packaged/sterile water monographs in *USP*, that test's insensitivity to many of the organic leachables from plastic and elastomeric packaging materials was largely unrealized, allowing organic levels in packaged/sterile water to be quite high (possibly many times the TOC specification for bulk water). Similarly, glass containers can also leach inorganics, such as sodium, which are easily detected by conductivity, but poorly detected by the former wet chemistry attribute tests. Most of these leachables are considered harmless by current perceptions and standards at the rather significant concentrations present. Nevertheless, they effectively degrade the quality of the high-purity waters placed into these packaging systems. Some packaging materials contain more leachables than others and may not be as suitable for holding water and maintaining its purity.

The attributes of conductivity and TOC tend to reveal more about the packaging leachables than they do about the water's original purity. These currently "allowed" leachables could render the sterile packaged versions of originally equivalent bulk water essentially unsuitable for many uses where the bulk waters are perfectly adequate.

Therefore, to better control the ionic packaging leachables, *Water Conductivity* ⟨645⟩ is divided into two sections. The first is titled *Bulk Water*, which applies to *Purified Water*, *Water for Injection*, *Water for Hemodialysis*, and *Pure Steam*, and includes the three-stage conductivity testing instructions and specifications. The second is titled *Sterile Water*, which applies to *Sterile Purified Water*, *Sterile Water for Injection*, *Sterile Water for Inhalation*, and *Sterile Water for Irrigation*. The *Sterile Water* section includes conductivity specifications similar to the *Stage 2* testing approach because it is intended as a laboratory test, and these sterile waters were made from bulk water that already complied with the three-stage conductivity test. In essence, packaging leachables are the primary target "analytes" of the conductivity specifications in the *Sterile Water* section of *Water Conductivity* ⟨645⟩. The effect on potential leachables

Table 1. Contributing Ion Conductivities of the Chloride–Ammonia Model as a Function of pH
(in atmosphere-equilibrated water at 25°)

	Conductivity (µS/cm)							
pH	**H^+**	**OH^-**	**HCO_3^-**	**Cl^-**	**Na^+**	**NH_4^+**	**Combined Conductivities**	**Stage 3 Limit**
5.0	3.49	*0*	*0.02*	*1.01*	*0.19*	*0*	4.71	4.7
5.1	2.77	0	0.02	1.01	0.29	0	4.09	4.1
5.2	2.20	0	0.03	1.01	0.38	0	3.62	3.6
5.3	1.75	0	0.04	1.01	0.46	0	3.26	3.3
5.4	1.39	0	0.05	1.01	0.52	0	2.97	3.0
5.5	1.10	0	0.06	1.01	0.58	0	2.75	2.8
5.6	0.88	0	0.08	1.01	0.63	0	2.60	2.6
5.7	0.70	0	0.10	1.01	0.68	0	2.49	2.5
5.8	0.55	0	0.12	1.01	0.73	0	2.41	2.4
5.9	0.44	0	0.16	1.01	0.78	0	2.39	2.4
6.0	0.35	0	0.20	1.01	0.84	0	2.40	2.4
6.1	0.28	0	0.25	1.01	0.90	0	2.44	2.4
6.2	0.22	0	0.31	1.01	0.99	0	2.53	2.5
6.3	0.18	0	0.39	0.63	0	1.22	2.42	2.4
6.4	0.14	0.01	0.49	0.45	0	1.22	2.31	2.3
6.5	0.11	0.01	0.62	0.22	0	1.22	2.18	2.2
6.6	0.09	0.01	0.78	0	0.04	1.22	2.14	2.1
6.7	0.07	0.01	0.99	0	0.27	1.22	2.56	2.6
6.8	0.06	0.01	1.24	0	0.56	1.22	3.09	3.1
6.9	0.04	0.02	1.56	0	0.93	1.22	3.77	3.8
7.0	*0.03*	0.02	1.97	0	1.39	1.22	4.63	4.6

Copyright (c) 2013 The United States Pharmacopeial Convention. All rights reserved.

from different container sizes is the rationale for having two different specifications, one for small packages containing nominal volumes of 10 mL or less and another for larger packages. These conductivity specifications are harmonized with the *European Pharmacopoeia* conductivity specifications for *Sterile Water for Injection.* All monographed waters, except *Bacteriostatic Water for Injection,* have a conductivity specification that directs the user to either the *Bulk Water* or the *Sterile Water* section of *Water Conductivity* ⟨645⟩. For the sterile packaged water monographs, this water conductivity specification replaces the redundant wet chemistry limit tests intended for inorganic contaminants that had previously been specified in these monographs.

Controlling the organic purity of these sterile packaged waters, particularly those in plastic packaging, is more challenging. Though the TOC test can better detect and therefore be better used to monitor and control these impurities than the current *Oxidizable substances* test, the latter has many decades-old precedents and flexibility with the variety of packaging types and volumes applicable to these sterile packaged waters. Nevertheless, TOC testing of these currently allowed sterile, plastic-packaged waters reveals substantial levels of plastic-derived organic leachables that render the water perhaps orders of magnitude less organically pure than typically achieved with bulk waters. Therefore, usage of these packaged waters for analytical, manufacturing, and cleaning applications should only be exercised after suitability of the waters' purity for the application has been assured.

■There is an analogous partitioning of *Total Organic Carbon* ⟨643⟩ to better control the organic packaging leachables. The first part is titled *Bulk Water*, which applies to the TOC method for *Purified Water*, *Water for Injection*, *Water for Hemodialysis*, and *Pure Steam*. The second part is titled *Sterile Water*, which applies to the TOC method for *Sterile Purified Water*, *Sterile Water for Injection*, *Sterile Water for Inhalation*, and *Sterile Water for Irrigation*. For these sterile waters, the TOC method is provided as an alternative test to the *Oxidizable Substances* test. The TOC limits for the sterile waters are set to higher values than the TOC limits for bulk waters.■1S *(USP36)*

MICROBIAL CONSIDERATIONS

The major exogenous source of microbial contamination of bulk pharmaceutical water is source or feed water. Feed water quality must, at a minimum, meet the quality attributes of Drinking Water for which the level of coliforms are regulated. A wide variety of other microorganisms, chiefly Gram-negative bacteria, may be present in the incoming water. These microorganisms may compromise subsequent purification steps. Examples of other potential exogenous sources of microbial contamination include unprotected vents, faulty air filters, ruptured rupture disks, backflow from contaminated outlets, unsanitized distribution system "openings" including routine component replacements, inspections, repairs, and expansions, inadequate drain and air-breaks, and replacement activated carbon, deionizer resins, and regenerant chemicals. In these situations, the exogenous contaminants may not be normal aquatic bacteria but rather microorganisms of soil or even human origin. The detection of nonaquatic microorganisms may be an indication of a system component failure, which should trigger investigations that will remediate their source. Sufficient care should be given to system design and maintenance in order to minimize microbial contamination from these exogenous sources.

Unit operations can be a major source of endogenous microbial contamination. Microorganisms present in feed water may adsorb to carbon bed, deionizer resins, filter membranes, and other unit operation surfaces and initiate the formation of a biofilm. In a high-purity water system, biofilm is an adaptive response by certain microorganisms to survive in this low nutrient environment. Downstream colonization can occur when microorganisms are shed from existing biofilm-colonized surfaces and carried to other areas of the water system. Microorganisms may also attach to suspended particles such as carbon bed fines or fractured resin particles. When the microorganisms become planktonic, they serve as a source of contamination to subsequent purification equipment (compromising its functionality) and to distribution systems.

Another source of endogenous microbial contamination is the distribution system itself. Microorganisms can colonize pipe surfaces, rough welds, badly aligned flanges, valves, and unidentified dead legs, where they proliferate, forming a biofilm. The smoothness and composition of the surface may affect the rate of initial microbial adsorption, but once adsorbed, biofilm development, unless otherwise inhibited by sanitizing conditions, will occur regardless of the surface. Once formed, the biofilm becomes a continuous source of microbial contamination.

ENDOTOXIN CONSIDERATIONS

Endotoxins are lipopolysaccharides found in and shed from the cell envelope that is external to the cell wall of Gram-negative bacteria. Gram-negative bacteria that form biofilms can become a source of endotoxins in pharmaceutical waters. Endotoxins may occur as clusters of lipopolysaccharide molecules associated with living microorganisms, fragments of dead microorganisms or the polysaccharide slime surrounding biofilm bacteria, or as free molecules. The free form of endotoxins may be released from cell surfaces of the bacteria that colonize the water system, or from the feed water that may enter the water system. Because of the multiplicity of endotoxin sources in a water system, endotoxin quantitation in a water system is not a good indicator of the level of biofilm abundance within a water system.

Endotoxin levels may be minimized by controlling the introduction of free endotoxins and microorganisms in the feed water and minimizing microbial proliferation in the system. This may be accomplished through the normal exclusion or removal action afforded by various unit operations within the treatment system as well as through system sanitization. Other control methods include the use of ultrafilters or charge-modified filters, either in-line or at the point of use. The presence of endotoxins may be monitored as described in the general test chapter *Bacterial Endotoxins Test* ⟨85⟩.

MICROBIAL ENUMERATION CONSIDERATIONS

The objective of a water system microbiological monitoring program is to provide sufficient information to control and assess the microbiological quality of the water produced. Product quality requirements should dictate water quality specifications. An appropri-

Accessed from 167.78.4.19 by James Cumbie (ocean22) on Mon Sep 09 15:04:23 EDT 2013

ate level of control may be maintained by using data trending techniques and, if necessary, limiting specific contraindicated microorganisms. Consequently, it may not be necessary to detect all of the microorganisms species present in a given sample. The monitoring program and methodology should indicate adverse trends and detect microorganisms that are potentially harmful to the finished product, process, or consumer. Final selection of method variables should be based on the individual requirements of the system being monitored.

It should be recognized that there is no single method that is capable of detecting all of the potential microbial contaminants of a water system. The methods used for microbial monitoring should be capable of isolating the numbers and types of organisms that have been deemed significant relative to in-process system control and product impact for each individual system. Several criteria should be considered when selecting a method to monitor the microbial content of a pharmaceutical water system. These include method sensitivity, range of organisms types or species recovered, sample processing throughput, incubation period, cost, and methodological complexity. An alternative consideration to the use of the classical "culture" approaches is a sophisticated instrumental or rapid test method that may yield more timely results. However, care must be exercised in selecting such an alternative approach to ensure that it has both sensitivity and correlation to classical culture approaches, which are generally considered the accepted standards for microbial enumeration.

Consideration should also be given to the timeliness of microbial enumeration testing after sample collection. The number of detectable planktonic bacteria in a sample collected in a scrupulously clean sample container will usually drop as time passes. The planktonic bacteria within the sample will tend to either die or to irretrievably adsorb to the container walls reducing the number of viable planktonic bacteria that can be withdrawn from the sample for testing. The opposite effect can also occur if the sample container is not scrupulously clean and contains a low concentration of some microbial nutrient that could promote microbial growth within the sample container. Because the number of recoverable bacteria in a sample can change positively or negatively over time after sample collection, it is best to test the samples as soon as possible after being collected. If it is not possible to test the sample within about 2 hours of collection, the sample should be held at refrigerated temperatures (2° to 8°) for a maximum of about 12 hours to maintain the microbial attributes until analysis. In situations where even this is not possible (such as when using off-site contract laboratories), testing of these refrigerated samples should be performed within 48 hours after sample collection. In the delayed testing scenario, the recovered microbial levels may not be the same as would have been recovered had the testing been performed shortly after sample collection. Therefore, studies should be performed to determine the existence and acceptability of potential microbial enumeration aberrations caused by protracted testing delays.

The Classical Culture Approach

Classical culture approaches for microbial testing of water include but are not limited to pour plates, spread plates, membrane filtration, and most probable number (MPN) tests. These methods are generally easy to perform, are less expensive, and provide excellent sample processing throughput. Method sensitivity can be increased via the use of larger sample sizes. This strategy is used in the membrane filtration method. Culture approaches are further defined by the type of medium used in combination with the incubation temperature and duration. This combination should be selected according to the monitoring needs presented by a specific water system as well as its ability to recover the microorganisms of interest: those that could have a detrimental effect on the product or process uses as well as those that reflect the microbial control status of the system.

There are two basic forms of media available for traditional microbiological analysis: "high nutrient" and "low nutrient". High-nutrient media such as plate count agar (TGYA) and m-HPC agar (formerly m-SPC agar), are intended as general media for the isolation and enumeration of heterotrophic or "copiotrophic" bacteria. Low-nutrient media such as R2A agar and NWRI agar (HPCA), may be beneficial for isolating slow growing "oligotrophic" bacteria and bacteria that require lower levels of nutrients to grow optimally. Often some facultative oligotrophic bacteria are able to grow on high nutrient media and some facultative copiotrophic bacteria are able to grow on low-nutrient media, but this overlap is not complete. Low-nutrient and high-nutrient cultural approaches may be concurrently used, especially during the validation of a water system, as well as periodically thereafter. This concurrent testing could determine if any additional numbers or types of bacteria can be preferentially recovered by one of the approaches. If so, the impact of these additional isolates on system control and the end uses of the water could be assessed. Also, the efficacy of system controls and sanitization on these additional isolates could be assessed.

Duration and temperature of incubation are also critical aspects of a microbiological test method. Classical methodologies using high nutrient media are typically incubated at 30° to 35° for 48 to 72 hours. Because of the flora in certain water systems, incubation at lower temperatures (e.g., 20° to 25°) for longer periods (e.g., 5 to 7 days) can recover higher microbial counts when compared to classical methods. Low-nutrient media are designed for these lower temperature and longer incubation conditions (sometimes as long as 14 days to maximize recovery of very slow growing oligotrophs or sanitant injured microorganisms), but even high-nutrient media can sometimes increase their recovery with these longer and cooler incubation conditions. Whether or not a particular system needs to be monitored using high- or low-nutrient media with higher or lower incubation temperatures or shorter or longer incubation times should be determined during or prior to system validation and periodically reassessed as the microbial flora of a new water system gradually establish a steady state relative to its routine maintenance and sanitization procedures. The establishment of a "steady state" can take months or even years and can be perturbed by a change in use patterns, a change in routine and preventative maintenance or sanitization procedures, and frequencies, or any type of system intrusion, such as for component replacement, removal, or addition. The decision to use longer incubation periods should be made after balancing the need for timely information and the type of corrective actions required when an alert or action level is exceeded with the ability to recover the microorganisms of interest.

The advantages gained by incubating for longer times, namely recovery of injured microorganisms, slow growers, or more fastidious microorganisms, should be balanced against the need to have a timely investigation and to take corrective action, as well as the ability of these microorganisms to detrimentally affect products or processes. In no case, however, should incubation at 30° to 35° be less than 48 hours or less than 96 hours at 20° to 25°.

Copyright (c) 2013 The United States Pharmacopeial Convention. All rights reserved.

Normally, the microorganisms that can thrive in extreme environments are best cultivated in the laboratory using conditions simulating the extreme environments from which they were taken. Therefore, thermophilic bacteria might be able to exist in the extreme environment of hot pharmaceutical water systems, and if so, could only be recovered and cultivated in the laboratory if similar thermal conditions were provided. Thermophilic aquatic microorganisms do exist in nature, but they typically derive their energy for growth from harnessing the energy from sunlight, from oxidation/reduction reactions of elements such as sulfur or iron, or indirectly from other microorganisms that do derive their energy from these processes. Such chemical/nutritional conditions do not exist in high purity water systems, whether ambient or hot. Therefore, it is generally considered pointless to search for thermophiles from hot pharmaceutical water systems owing to their inability to grow there.

The microorganisms that inhabit hot systems tend to be found in much cooler locations within these systems, for example, within use-point heat exchangers or transfer hoses. If this occurs, the kinds of microorganisms recovered are usually of the same types that might be expected from ambient water systems. Therefore, the mesophilic microbial cultivation conditions described later in this chapter are usually adequate for their recovery.

"Instrumental" Approaches

Examples of instrumental approaches include microscopic visual counting techniques (e.g., epifluorescence and immunofluorescence) and similar automated laser scanning approaches and radiometric, impedometric, and biochemically based methodologies. These methods all possess a variety of advantages and disadvantages. Advantages could be their precision and accuracy or their speed of test result availability as compared to the classical cultural approach. In general, instrument approaches often have a shorter lead time for obtaining results, which could facilitate timely system control. This advantage, however, is often counterbalanced by limited sample processing throughput due to extended sample collection time, costly and/or labor-intensive sample processing, or other instrument and sensitivity limitations.

Furthermore, instrumental approaches are typically destructive, precluding subsequent isolate manipulation for characterization purposes. Generally, some form of microbial isolate characterization, if not full identification, may be a required element of water system monitoring. Consequently, culturing approaches have traditionally been preferred over instrumental approaches because they offer a balance of desirable test attributes and post-test capabilities.

Suggested Methodologies

The following general methods were originally derived from *Standard Methods for the Examination of Water and Wastewater,* 17th Edition, American Public Health Association, Washington, DC 20005. Even though this publication has undergone several revisions since its first citation in this chapter, the methods are still considered appropriate for establishing trends in the number of colony-forming units observed in the routine microbiological monitoring of pharmaceutical waters. It is recognized, however, that other combinations of media and incubation time and temperature may occasionally or even consistently result in higher numbers of colony-forming units being observed and/or different species being recovered.

The extended incubation periods that are usually required by some of the alternative methods available offer disadvantages that may outweigh the advantages of the higher counts that may be obtained. The somewhat higher baseline counts that might be observed using alternate cultural conditions would not necessarily have greater utility in detecting an excursion or a trend. In addition, some alternate cultural conditions using low-nutrient media tend to lead to the development of microbial colonies that are much less differentiated in colonial appearance, an attribute that microbiologists rely on when selecting representative microbial types for further characterization. It is also ironical that the nature of some of the slow growers and the extended incubation times needed for their development into visible colonies may also lead to those colonies being largely nonviable, which limits their further characterization and precludes their subculture and identification.

Methodologies that can be suggested as generally satisfactory for monitoring pharmaceutical water systems are as follows. However, it must be noted that these are not referee methods nor are they necessarily optimal for recovering microorganisms from all water systems. The users should determine through experimentation with various approaches which methodologies are best for monitoring their water systems for in-process control and quality control purposes as well as for recovering any contraindicated species they may have specified.

Accessed from 167.78.4.19 by James Cumbie (ocean22) on Mon Sep 09 15:04:23 EDT 2013

Drinking Water:	Pour Plate Method or Membrane Filtration Method[1]
	Sample Volume—1.0 mL minimum[2] Growth Medium—Plate Count Agar[3] Incubation Time—48 to 72 hours minimum Incubation Temperature—30° to 35°
Purified Water:	Pour Plate Method or Membrane Filtration Method[1]
	Sample Volume—1.0 mL minimum[2] Growth Medium—Plate Count Agar[3] Incubation Time—48 to 72 hours minimum Incubation Temperature—30° to 35°
Water for Injection:	Membrane Filtration Method[1]
	Sample Volume—100 mL minimum[2] Growth Medium—Plate Count Agar[3] Incubation Time—48 to 72 hours minimum Incubation Temperature—30°C to 35°C

[1] A membrane filter with a rating of 0.45 µm is generally considered preferable even though the cellular width of some of the bacteria in the sample may be narrower than this. The efficiency of the filtration process still allows the retention of a very high percentage of these smaller cells and is adequate for this application. Filters with smaller ratings may be used if desired, but for a variety of reasons the ability of the retained cells to develop into visible colonies may be compromised, so count accuracy must be verified by a reference approach.

[2] When colony counts are low to undetectable using the indicated minimum sample volume, it is generally recognized that a larger sample volume should be tested in order to gain better assurance that the resulting colony count is more statistically representative. The sample volume to consider testing is dependent on the user's need to know (which is related to the established alert and action levels and the water system's microbial control capabilities) and the statistical reliability of the resulting colony count. In order to test a larger sample volume, it may be necessary to change testing techniques, e.g., changing from a pour plate to a membrane filtration approach. Nevertheless, in a very low to nil count scenario, a maximum sample volume of around 250 to 300 mL is usually considered a reasonable balance of sample collecting and processing ease and increased statistical reliability. However, when sample volumes larger than about 2 mL are needed, they can only be processed using the membrane filtration method.

[3] Also known as Standard Methods Agar, Standard Methods Plate Count Agar, or TGYA, this medium contains tryptone (pancreatic digest of casein), glucose and yeast extract.

IDENTIFICATION OF MICROORGANISMS

Identifying the isolates recovered from water monitoring methods may be important in instances where specific waterborne microorganisms may be detrimental to the products or processes in which the water is used. Microorganism information such as this may also be useful when identifying the source of microbial contamination in a product or process. Often a limited group of microorganisms is routinely recovered from a water system. After repeated recovery and characterization, an experienced microbiologist may become proficient at their identification based on only a few recognizable traits such as colonial morphology and staining characteristics. This may allow for a reduction in the number of identifications to representative colony types, or, with proper analyst qualification, may even allow testing short cuts to be taken for these microbial identifications.

ALERT AND ACTION LEVELS AND SPECIFICATIONS

Though the use of alert and action levels is most often associated with microbial data, they can be associated with any attribute. In pharmaceutical water systems, almost every quality attribute, other than microbial quality, can be very rapidly determined with near-real time results. These short-delay data can give immediate system performance feedback, serving as ongoing process control indicators. However, because some attributes may not continuously be monitored or have a long delay in data availability (like microbial monitoring data), properly established *Alert and Action Levels* can serve as an early warning or indication of a potentially approaching quality shift occurring between or at the next periodic monitoring. In a validated water system, process controls should yield relatively constant and more than adequate values for these monitored attributes such that their *Alert and Action Levels* are infrequently broached.

As process control indicators, alert and action levels are designed to allow remedial action to occur that will prevent a system from deviating completely out of control and producing water unfit for its intended use. This "intended use" minimum quality is sometimes referred to as a "specification" or "limit". In the opening paragraphs of this chapter, rationale was presented for no microbial specifications being included within the body of the bulk water (*Purified Water* and *Water for Injection*) monographs. This does not mean that the user should not have microbial specifications for these waters. To the contrary, in most situations such specifications should be established by the user. The microbial specification should reflect the maximum microbial level at which the water is still fit for use without compromising the quality needs of the process or product where the water is used. Because water from a given system may have many uses, the most stringent of these uses should be used to establish this specification.

Where appropriate, a microbial specification could be qualitative as well as quantitative. In other words, the number of total microorganisms may be as important as the number of a specific microorganism or even the absence of a specific microorganism. Microorganisms that are known to be problematic could include opportunistic or overt pathogens, nonpathogenic indicators of potentially undetected pathogens, or microorganisms known to compromise a process or product, such as by being resistant to a preservative or able to proliferate in or degrade a product. These microorganisms comprise an often ill-defined group referred to as "objectionable microorganisms". Because objectionable is a term relative to the water's use, the list of microorganisms in such a

Copyright (c) 2013 The United States Pharmacopeial Convention. All rights reserved.

group should be tailored to those species with the potential to be present and problematic. Their negative impact is most often demonstrated when they are present in high numbers, but depending on the species, an allowable level may exist, below which they may not be considered objectionable.

As stated above, alert and action levels for a given process control attribute are used to help maintain system control and avoid exceeding the pass/fail specification for that attribute. Alert and action levels may be both quantitative and qualitative. They may involve levels of total microbial counts or recoveries of specific microorganisms. Alert levels are events or levels that, when they occur or are exceeded, indicate that a process may have drifted from its normal operating condition. Alert level excursions constitute a warning and do not necessarily require a corrective action. However, alert level excursions usually lead to the alerting of personnel involved in water system operation as well as QA. Alert level excursions may also lead to additional monitoring with more intense scrutiny of resulting and neighboring data as well as other process indicators. Action levels are events or higher levels that, when they occur or are exceeded, indicate that a process is probably drifting from its normal operating range. Examples of kinds of action level "events" include exceeding alert levels repeatedly; or in multiple simultaneous locations, a single occurrence of exceeding a higher microbial level; or the individual or repeated recovery of specific objectionable microorganisms. Exceeding an action level should lead to immediate notification of both QA and personnel involved in water system operations so that corrective actions can immediately be taken to bring the process back into its normal operating range. Such remedial actions should also include efforts to understand and eliminate or at least reduce the incidence of a future occurrence. A root cause investigation may be necessary to devise an effective preventative action strategy. Depending on the nature of the action level excursion, it may also be necessary to evaluate its impact on the water uses during that time. Impact evaluations may include delineation of affected batches and additional or more extensive product testing. It may also involve experimental product challenges.

Alert and action levels should be derived from an evaluation of historic monitoring data called a trend analysis. Other guidelines on approaches that may be used, ranging from "inspectional" to statistical evaluation of the historical data have been published. The ultimate goal is to understand the normal variability of the data during what is considered a typical operational period. Then, trigger points or levels can be established that will signal when future data may be approaching (alert level) or exceeding (action level) the boundaries of that "normal variability". Such alert and action levels are based on the control capability of the system as it was being maintained and controlled during that historic period of typical control.

In new water systems where there is very limited or no historic data from which to derive data trends, it is common to simply establish initial alert and action levels based on a combination of equipment design capabilities but below the process and product specifications where water is used. It is also common, especially for ambient water systems, to microbiologically "mature" over the first year of use. By the end of this period, a relatively steady state microbial population (microorganism types and levels) will have been allowed or promoted to develop as a result of the collective effects of routine system maintenance and operation, including the frequency of unit operation rebeddings, backwashings, regenerations, and sanitizations. This microbial population will typically be higher than was seen when the water system was new, so it should be expected that the data trends (and the resulting alert and action levels) will increase over this "maturation" period and eventually level off.

A water system should be designed so that performance-based alert and action levels are well below water specifications. With poorly designed or maintained water systems, the system owner may find that initial new system microbial levels were acceptable for the water uses and specifications, but the mature levels are not. This is a serious situation, which if not correctable with more frequent system maintenance and sanitization, may require expensive water system renovation or even replacement. Therefore, it cannot be overemphasized that water systems should be designed for ease of microbial control, so that when monitored against alert and action levels, and maintained accordingly, the water continuously meets all applicable specifications.

An action level should not be established at a level equivalent to the specification. This leaves no room for remedial system maintenance that could avoid a specification excursion. Exceeding a specification is a far more serious event than an action level excursion. A specification excursion may trigger an extensive finished product impact investigation, substantial remedial actions within the water system that may include a complete shutdown, and possibly even product rejection.

Another scenario to be avoided is the establishment of an arbitrarily high and usually nonperformance based action level. Such unrealistic action levels deprive users of meaningful indicator values that could trigger remedial system maintenance. Unrealistically high action levels allow systems to grow well out of control before action is taken, when their intent should be to catch a system imbalance before it goes wildly out of control.

Because alert and action levels should be based on actual system performance, and the system performance data are generated by a given test method, it follows that those alert and action levels should be valid only for test results generated by the same test method. It is invalid to apply alert and action level criteria to test results generated by a different test method. The two test methods may not equivalently recover microorganisms from the same water samples. Similarly invalid is the use of trend data to derive alert and action levels for one water system, but applying those alert and action levels to a different water system. Alert and action levels are water system and test method specific.

Nevertheless, there are certain maximum microbial levels above which action levels should never be established. Water systems with these levels should unarguably be considered out of control. Using the microbial enumeration methodologies suggested above, generally considered maximum action levels are 100 cfu per mL for *Purified Water* and 10 cfu per 100 mL for *Water for Injection*. However, if a given water system controls microorganisms much more tightly than these levels, appropriate alert and action levels should be established from these tighter control levels so that they can truly indicate when water systems may be starting to trend out of control. These in-process microbial control parameters should be established well below the user-defined microbial specifications that delineate the water's fitness for use.

Special consideration is needed for establishing maximum microbial action levels for *Drinking Water* because the water is often delivered to the facility in a condition over which the user has little control. High microbial levels in *Drinking Water* may be indicative of a municipal water system upset, broken water main, or inadequate disinfection, and therefore, potential contamination with objectionable microorganisms. Using the suggested microbial enumeration methodology, a reasonable maximum action level for *Drinking Water* is 500 cfu per mL. Considering the potential concern for objectionable microorganisms raised by such high microbial

Accessed from 167.78.4.19 by James Cumbie (ocean22) on Mon Sep 09 15:04:23 EDT 2013

levels in the feedwater, informing the municipality of the problem so they may begin corrective actions should be an immediate first step. In-house remedial actions may or may not also be needed, but could include performing additional coliform testing on the incoming water and pretreating the water with either additional chlorination or UV light irradiation or filtration or a combination of approaches.

⟨1251⟩ WEIGHING ON AN ANALYTICAL BALANCE

Change to read:

▪INTRODUCTION

Weighing is a frequent step in analytical procedures, and the balance is an essential piece of laboratory equipment. The general information described here applies directly to electronic balances used in analytical procedures. Although many portions of the chapter are applicable to all balances, some are applicable only to analytical balances. This chapter should not be considered all-inclusive, and other sources of information (e.g., the US National Institute for Science and Technology and balance manufacturers) may be useful and applicable when analysts perform a weighing operation or implement a weighing procedure.[1,2] The information given in this chapter is applicable not only to balances used for materials that must be accurately weighed (see *Balances* ⟨41⟩) but also to balances used in all analytical procedures.

QUALIFICATION

Users should consult *Analytical Instrument Qualification* ⟨1058⟩, standard operating procedures, and recommendations from manufacturers when they devise qualification plans.

Installation

The balance's performance depends on the conditions of the facility where it is installed. Analysts should consult information provided by the manufacturer before they install a balance.

Support surface: The balance should be installed on a solid, level, nonmagnetic surface that minimizes the transmission of vibration (e.g., a floor-mounted, granite weigh bench). If a metallic support surface is used, the surface should be grounded in order to prevent the buildup of static electricity.

Location: If possible, the balance should be located in a room that is temperature and humidity controlled. The location should have a clean, consistent electrical power supply. The location should be free of drafts and should not be near ovens, furnaces, air conditioner ducts, or cooling fans from equipment or computers. The balance should be positioned away from outside windows so that direct sunlight does not strike the balance. The balance should not be installed near sources of electromagnetic radiation such as radio-frequency generators, electric motors, or hand-held communication devices (including cordless telephones, cellular telephones, and walkie-talkies). The balance should not be located near magnetic fields induced by laboratory instrumentation or other equipment.

The performance of the balance should be assessed following installation and before use in order to demonstrate adequate performance. In some situations, it may not be possible to position the balance in an optimum environment. Examples of potential facility issues include the following:

1. Air currents sometimes are present in the laboratory.
2. Temperatures in the laboratory vary excessively (check the manufacturer's literature about temperature sensitivity).
3. Humidity is either very low or very high. Either condition may increase the rate at which the sample weight varies because of pickup or loss of water. Low humidity increases the buildup of static electricity.
4. Adjacent operations are causing vibration.
5. Corrosive materials are used nearby or are routinely weighed.
6. The balance is located within a fume hood because it is used to weigh corrosive or hazardous materials.
7. The balance is adjacent to equipment that produces a magnetic field (e.g., a magnetic stirrer).
8. Direct sunlight strikes the balance.

In situations when the balance is located near equipment or systems that induce vibration, drafts, electromagnetic radiation, magnetic fields, or changes in temperature or humidity, the assessment should be conducted with those systems operating in order to duplicate a worst-case scenario.

Operational Qualification

An operational qualification should be performed either by the user or by a qualified third-party vendor after the equipment has been installed.

As a minimum, the power should be turned on and the balance should be allowed to equilibrate according to the manufacturer's instructions (1–24 h, depending on the type of balance) before use. Depending on the balance, analysts should include the following procedures in the operational qualification:

[1] National Physical Laboratory. Good practice guide No. 70, weighing in the pharmaceutical industry. 2004. http://resource.npl.co.uk/docs/science_technology/mass_force_pressure/clubs_groups/instmc_weighing_panel/pharmaweigh.pdf. Accessed 21 March 2012. [NOTE—Nomenclature in this chapter tends to follow this document, except where it conflicts with USP terms.]

[2] American Society for Testing and Materials. E898 Standard test method of testing top-loading, direct-reading laboratory scales and balances. 2005. http://www.astm.org/Standards/E898.htm. Accessed 21 March 2012.

Copyright (c) 2013 The United States Pharmacopeial Convention. All rights reserved.

1. Mechanical mobility of all moveable parts
2. Control of stable indication
3. Manually triggered or automatic adjustment by means of built-in weights
4. Operation of ancillary equipment
5. Tare function
6. Initial calibration

Several types of electronic analytical balances use built-in weights for manually triggered or automatic adjustment. This adjustment usually is applied to reduce the drift of the balance over time and to compensate for drifts caused by variations in the ambient temperature.

Calibration normally is performed as part of the operational qualification, but it also can be performed periodically thereafter. Calibration should be performed at the location where the balance is used in normal operation.

Performance Qualification

Table 1 provides a list of the most important balance properties that should be assessed during performance qualification. Depending on the risk of the application and the required weighing process tolerance, some of these tests may be omitted. Tests also can be omitted if there is evidence that the property in question has only minimal effect on the weighing performance. Any procedures used should be consistent with in-house standard operating procedures, applicable for the specific balance, and adequately justified. Performance qualification should be performed periodically as described in standard operating procedures, and the frequency of each of the individual tests can vary depending on the criticality of the property.

The weights that are used to perform the tests should be stored and handled in a manner that minimizes contamination. Before executing the tests, the analyst should place the weights in the vicinity of the balance for an appropriate time to reach sufficient thermal equilibrium. If possible, all tests should be carried out with a single test weight in order to minimize handling errors, but multiple test weights are permitted.

The tests should be recorded in such a manner that the data can be used to easily track balance performance and to assist in laboratory investigations as needed. Meaningful acceptance criteria can be set depending on the required weighing tolerance, i.e., the maximum allowed deviation permitted by specifications, regulations, etc., of a quantity to be weighed from its target value. Procedures should be in place to address test results that are outside acceptable ranges and to provide assurance that balance cleanliness and environment have not affected the result. Also, a procedure should be in place for removing a balance from operation when observed results fall outside acceptable ranges.

Table 1. Suggested Performance Tests and Acceptance Criteria

Property	Definition	Examples	Acceptance Criteria
Sensitivity	Change in weighing value divided by the change in load, usually measured between zero and the capacity of the balance.	The test load at or sufficiently close to the capacity of the balance.	NMT 0.05% deviation where ⟨41⟩ is applicable. For other uses, respective tolerance requirement divided by 2.
Linearity	Ability of a balance to follow the linear relationship between a load and the indicated weighing value. Nonlinearity usually is expressed as the largest magnitude of any linearity deviation within the test interval.	From 3 to 6 points over the range of the balance.	NMT 0.05% deviation where ⟨41⟩ is applicable. For other uses, respective tolerance requirement divided by 2.
Eccentricity	Deviation in the measurement value caused by eccentric loading—in other words, the asymmetrical placement of the center of gravity of the load relative to the load receiver. Eccentricity usually is expressed as the largest magnitude of any of the deviations between an off-center reading and the center reading for a given test load.	Performed in the center of gravity and the four quadrants (for rectangular platter shapes) or at analogous locations for other platter shapes. Test load usually should be 30% of the capacity of the balance or higher (refer to the manufacturer's manual for any possible upper limit).	NMT 0.05% deviation where ⟨41⟩ is applicable. For other uses, respective tolerance requirement divided by 2.
Repeatability	Ability of a weighing instrument to display identical measurement values for repeated weighings of the same objects under the same conditions, e.g., the same measurement procedure, same operator, same measuring system, same operating conditions, and same location over a short period of time. Repeatability usually is expressed as the standard deviation of multiple weighings.	10 replicate weighings (using a test weight that is a few percent of the nominal capacity of the balance).	Requirement from ⟨41⟩ where applicable. For other uses, user specified requirements will apply.

Sensitivity, linearity, and eccentricity all account for systematic deviations; i.e., they limit the accuracy of the balance (based on the definition of accuracy in *Validation of Compendial Procedures* ⟨1225⟩ and ICH Q2). In the International Vocabulary of Metrology (VIM) and documents of the International Organization for Standardization, this concept is referred to as trueness. Because deviations are largely independent from each other, it is not likely that all deviations occur simultaneously and have the same algebraic sign. Therefore the arithmetic addition of all individual deviations to assess the balance accuracy would constitute a rather conservative

Accessed from 167.78.4.19 by James Cumbie (ocean22) on Mon Sep 09 15:04:23 EDT 2013

approach. A quadratic addition of the individual deviations is a more realistic approach. By allocating 50% of the weighing tolerance budget to the acceptance criteria of the individual properties, e.g., sensitivity, linearity, and eccentricity, analysts ensure adherence to the required weighing tolerance. Therefore, the acceptance criteria for the individual properties that account for the systematic deviations are set to weighing tolerance divided by 2. These properties—or a subset of them—also can be taken to fulfill the accuracy requirement described in ⟨41⟩. In this case the acceptance criteria thus allow a maximum deviation of 0.05% for sensitivity, linearity, and eccentricity. Repeatability preferably is tested with a test weight of a few percent of the balance capacity. At the lower end of its measurement range, the performance of laboratory balances is limited by the finite repeatability, and limitations induced by systematic deviations normally can be neglected. Therefore, the whole weighing tolerance budget can be allocated to the acceptance criterion of the repeatability test.

For the sensitivity and linearity tests as described above, the analyst should use certified weights with an appropriate weight class (e.g., according to International Organization of Legal Metrology R111 or American Society for Testing and Materials E617, available from www.oiml.org and www.astm.org, respectively). [NOTE—If a differential method is used for the linearity test, certified weights may not be required.]

Depending on the acceptance criterion, it may be sufficient to consider only the nominal weight value of the test weights. If the nominal value of the test weight is considered, analysts should ensure that the maximum permissible error does not exceed one-third of the acceptance criterion. Alternatively, if the certified value of the test weight is considered, its calibration uncertainty should not exceed one-third of the acceptance criterion. If more than one weight is used to perform the test, the calibration uncertainties of the weights must be summed and the sum should not exceed one-third of the acceptance criterion. For tests such as eccentricity or repeatability, the use of certified weights is optional, but analysts must ensure that the mass of the weight does not change during the test.

The tests described above also can be included in formal periodic calibration in order to fulfill applicable cGMP requirements.

Balance Checks

A balance check using an external weight helps ensure that the balance meets weighing tolerance requirements. The balance check is performed at appropriate intervals based on applicable standard operating procedures. The frequency of the balance check depends on the risk of the application and the required weighing tolerance. Checks with external weights can be replaced partially using automatic or manually triggered adjustment by means of built-in weights. When analysts perform the balance check with an external weight, the same acceptance criteria may apply as described in the sensitivity test above.

Minimum Weight

The minimum net sample weight, m_{min}, of a balance can be expressed by the equation:

$$m_{min} = k \times s/\text{required weighing tolerance}$$

where k is the coverage factor (usually 2 or larger) and s is the standard deviation (in a mass unit, e.g., in mg) of not fewer than 10 replicate measurements of a test weight. The minimum weight describes the lower limit of the balance below which the required weighing tolerance is not adhered to. The equation above takes into account that the performance of laboratory balances at the lower end of the measurement range is limited by the finite repeatability.

For materials that must be accurately weighed, ⟨41⟩ stipulates that repeatability is satisfactory if two times the standard deviation of the weighed value, divided by the nominal value of the weight used, does not exceed 0.10%. For this criterion the equation above simplifies to:

$$m_{min} = 2000 \times s$$

If not subject to the requirements of ⟨41⟩, the minimum weight value may vary depending on the required weighing tolerance and the specific use of the balance.

To facilitate handling, the test weight that is used for the repeatability test does not need to be at the minimum weight value but can be larger because the standard deviation of repeatability is only a weak function of the test weight value.

In order to satisfy the required weighing tolerance, when samples are weighed the amount of sample mass (i.e., the net weight) must be equal to or larger than the minimum weight. The minimum weight applies to the sample weight, not to the tare or gross weight.

Factors that can influence repeatability while the balance is in use include:

1. The performance of the balance and thus the minimum weight can vary over time because of changing environmental conditions.
2. Different operators may weigh differently on the balance—i.e., the minimum weight determined by different operators may be different.
3. The standard deviation of a finite number of replicate weighings is only an estimation of the true standard deviation, which is unknown.
4. The determination of the minimum weight with a test weight may not be completely representative for the weighing application.
5. The tare vessel also may influence minimum weight because of the interaction of the environment with the surface of the tare vessel.

For these reasons, when possible, weighings should be made at larger values than the minimum weight.

Copyright (c) 2013 The United States Pharmacopeial Convention. All rights reserved.

OPERATION OF THE ANALYTICAL BALANCE

Select the appropriate balance for the quantity and performance needed. General chapter ⟨41⟩ provides requirements for balances used for materials that must be accurately weighed.The balance user should check the balance environment (vibration, air currents, and cleanliness) and status of calibration before use.

Receivers

To ensure suitable performance in measuring the weight of a specimen, analysts should consider selection of a proper receiver for the material.

General characteristics: All receivers must be clean, dry, and inert. The total weight of the receiver plus the specimen must not exceed the maximum capacity of the balance. With a properly maintained and adjusted laboratory balance, weighing uncertainty for small samples, i.e., net weights with a mass not exceeding typically a few percent of the capacity of the balance, essentially is determined by the repeatability. However, repeatability depends on the size and surface area of the weighed object. For this reason large or heavy receivers introduce a deviation from the conditions under which the repeatability was determined without considering the receivers. Therefore, either receivers of a low mass and small surface should be used (especially in cases when specimens of low weight are being measured) or the repeatability test should be performed with the receiver placed on the weighing pan as a preload. Receivers should be constructed from nonmagnetic materials in order to prevent magnetic interference with electronic balance components. Receivers should be used at ambient temperature in order to prevent the formation of air currents within the weighing chamber.

Solid samples: Receivers for weighing solid materials include weighing paper, weighing dishes, weighing funnels, or enclosed vessels, including bottles, vials, and flasks. Hygroscopic papers are not recommended for weighing because they may have a detrimental effect on the observed results.

Weighing dishes typically are constructed from a polymer or from aluminum. Antistatic weighing dishes are available for measuring materials that retain static electricity. Weighing funnels typically are constructed from glass or from a polymer. The design of this type of receiver combines attributes of a weighing dish and a transfer funnel, which can simplify the analytical transfer of a weighed powder to a narrow-necked vessel such as a volumetric flask. For solid samples that are volatile or deliquescent, analysts must weigh the material into an enclosed vessel. Where practical, analysts should use an enclosed vessel with a small opening in order to reduce sample weight loss from volatilization or weight gain from the adsorption and absorption of atmospheric water.

Liquid samples: Receivers for liquid samples typically are inert, enclosed vessels. For liquid samples that are volatile or deliquescent, analysts should use an enclosed vessel with a small opening, and the enclosure should be replaced rapidly following material transfer. Special precautions should be taken to be certain that the receiver and the enclosure are constructed from a material that is compatible with the liquid sample. The receiver and enclosure must have a seal that is sufficient to prevent leaks from a liquid that is of low viscosity or has low surface tension or a low boiling point.

Types of Weighing

Weighing for quantitative analysis: The initial step for many quantitative analyses is to accurately weigh a specified amount of a sample. Section 6.50.20 in the *General Notices* stipulates that solutions for quantitative measures must be prepared using accurately weighed analytes: i.e., analysts must use a balance that meets the criteria in ⟨41⟩. Errors introduced during the weighing of a sample can affect the accuracy of all subsequent analytical measurements.

Addition weighing: Addition weighings typically are used for solid samples or liquid samples for which volatility is not an issue. The receiver is placed on the balance. After the balance display stabilizes, the analyst should tare the balance; add the desired amount of material to the receiver; allow the balance display to stabilize; record the weight; and quantitatively transfer the material to an appropriate vessel or, if it cannot be guaranteed that the entire amount has been transferred, weigh the receiver again and note the weight difference.

Dispense weighing: Dispense weighing typically is used for weighing emulsions or viscous liquids such as ointments. In these situations it is not practical to weigh the material into a typical receiver. Accordingly, the analyst should tare the balance; place the sample on the balance in a suitable container (e.g., a bottle, tube, transfer pipet, or syringe) that has been wiped clean on the outside; record the weight after the balance display stabilizes; transfer the desired amount of sample to an appropriate receiving vessel, such as a volumetric flask; and place the pipet or syringe back onto the balance. The difference in the two weighings is equal to the weight of the transferred specimen.

Gravimetric dosing: Gravimetric dosing typically is used for sample and standard preparations or capsule filling. For such weighing the analyst places the volumetric flask, vial, or capsule shell on the balance; tares the balance after the balance display stabilizes; adds the solid or liquid components into the receiver by means of dosing units; and records the respective weights.

Problem Samples

Electrically charged samples and receivers: Dry, finely divided powders may be charged with static electricity that can make the powder either attracted to or repelled by the receiver or the balance, causing inaccurate weight measurements and specimen loss during transfer. A drift in the balance readings should alert the operator to the possibility that the material has a static charge. Commercially available balances with a built-in antistatic device can be used to remedy the problem. Such devices may use piezoelectric components or a very small amount of a radioactive element (typically polonium) to generate a stream of ions that dissipate the static charge when passed over the powder being weighed. Antistatic weigh boats, antistatic guns, and antistatic screens also are commercially available. The static charge depends also on the relative humidity of the laboratory, which in turn

Accessed from 167.78.4.19 by James Cumbie (ocean22) on Mon Sep 09 15:04:23 EDT 2013

depends on atmospheric conditions. Under certain conditions, static charge is caused by the type of clothing worn by the operator and this charge can cause large errors in the weighing. Borosilicate glassware and plastic receivers have a well-known propensity for picking up static charge, especially at low relative humidity. The gloves used to protect the operator also may increase the potential for a static charge problem. Placing the container in a metal holder may help to shield the static charge, and antistatic gloves also can help to alleviate the problem.

Volatile samples: When weighing a liquid that has a low boiling point, analysts must receive the specimen in a vessel with a gas-tight enclosure of small diameter. The analyst then tares the vessel and enclosure, adds the desired amount of sample, and replaces the enclosure. After the balance display stabilizes, the analyst records the specimen weight.

Warm or cool samples: Samples that are warm or cool should be equilibrated in the laboratory, or the weight readings may be erroneous. With regard to warm samples, the apparent weight is smaller than the true weight because of heat convection. For example, a flask that is warmer than ambient air warms up this air, which then flows upward along the flask and reduces the apparent weight of the contents by viscous friction.

Hygroscopic samples: Hygroscopic materials readily absorb moisture from the atmosphere and steadily gain weight if left exposed. Therefore, hygroscopic samples must be either weighed promptly or placed in a vessel with a gas-tight enclosure. For a gas-tight vessel, analysts should tare the vessel and enclosure, add the desired amount of sample, and replace the enclosure. After the balance display stabilizes, the analyst can record the specimen weight.

Aseptic or biohazardous samples: The weighing of sterile or biohazardous samples should take place within the confines of a clean bench, biosafety cabinet, isolator, or similar containment device. Air flow within the hood potentially can cause balance instability, so after a balance has been installed under a hood, analysts should perform a rigorous qualification study with suitable weight artifacts (see ⟨41⟩) in order to determine the acceptability of the balance performance in this environment.

Weighing corrosive materials: Many chemicals, such as salts, are corrosive, and materials of this nature should not be spilled on the balance pan or inside the balance housing. Extra care is essential when materials of this nature are weighed. Analysts should consider the use of sealed containers such as weighing bottles or syringes. In the event of a spill, requalification of balance may be necessary, depending on the nature of the spill.

Safety Considerations When Weighing

During a weighing, the analyst may be exposed to high concentrations of a pure substance. The analyst must carefully consider this possibility at all times and should be familiar with the precautions described in the substance's Material Safety Data Sheet before weighing it. Hazardous materials should be handled in an enclosure that has appropriate air filtration. Many toxic—and possibly allergenic—substances present as liquids or finely divided particles. When weighing these substances, analysts should use a mask that covers the nose and mouth to prevent any inhalation of the substance, and they should use gloves to prevent any contact with the skin. [NOTE—The use of gloves is good practice for handling any chemical. If it is necessary to handle the container being weighed, the analyst should wear gloves not only for self-protection but also to prevent moisture and oils from being deposited on the weighed container.]■2S *(USP36)*

Copyright (c) 2013 The United States Pharmacopeial Convention. All rights reserved.

⟨1265⟩ WRITTEN PRESCRIPTION DRUG INFORMATION—GUIDELINES

The purpose of these guidelines—comprising format, content, and accessibility of prescription drug leaflets—is to help ensure that leaflets are useful. In this context, "useful" means that recipients receive, understand, and are motivated to apply written information about their medicines to achieve maximum benefit and minimize harm. Dispensers, prescribers, health care providers who counsel patients about their medicines, and the patients themselves are intended to be the primary beneficiaries for these guidelines.

CRITERIA (from the Keystone Action Plan[1])

Written prescription medicine information should be based on the following criteria:

1. Scientifically accurate,
2. Unbiased in content and tone,
3. Sufficiently specific and comprehensive,
4. Presented in an understandable and legible format that is readily comprehensible to consumers,
5. Timely and up-to-date, and
6. Useful.

FORMAT GUIDELINES

1. Group all information from the same category, using brief, clear titles and bullets or subheadings as needed. Avoid symbols and subheadings not directly connected to the information they mark.
2. Be consistent in the placement and labeling of categories of information in all leaflets.
3. Provide information at the sixth-grade reading level or below, if possible (never above eighth-grade level). Do not exclude information to achieve a lower reading level.
4. Use simple, common, accurate terms (for example, use "noise in the ears", not "tinnitus").
5. Use direct language that avoids words with opposite meanings (for example, use "decrease blood pressure", not "increase low blood pressure effect").
6. Provide reasons for instructions (for example, "take with food to avoid upset stomach").
7. Emphasize the most important information. Clearly distinguish warnings from instructions or from other text that may be misinterpreted as warnings.
8. Accompany each pictogram, if used, with corresponding text placed close to the pictogram. Use the simplest pictograms possible. For pictograms intended to prompt patients to ask questions or inform health care providers, add text such as "Tell Doctor" or "Ask Pharmacist".
9. Make text readable by using 12-point or larger type, both uppercase and lowercase letters, an easy-to-read font (for example, a serif font), and adequate space between lines and paragraphs. To call attention to important information, use a larger, boldface type.
10. Evaluate format by performing tests of readability, comprehension, memory, problem solving, and behavioral efficacy and intention, using representative samples of the target population.

CONTENT GUIDELINES

1. Provide enough detail to facilitate correct use, achieve maximum benefit, and minimize harm, including a statement that identifies activities (such as driving or sunbathing) that the patient should avoid.
2. Write text that is unbiased in content and tone and scientifically accurate. The uses described should be consistent with FDA-approved labeling or otherwise permitted by FDA, or should appear in federally recognized drug compendia. Distinguish unlabeled from labeled use.
3. For drugs sold under a brand name, provide both brand and generic names, and include a pronunciation guide for each.
4. Describe the drug and its dosage form. Include indications and contraindications, specific directions for use, what to do if a dose is missed, and what to do in the event of an overdose or poisoning.
5. Do not use abbreviations.
6. Indicate the intended type of benefit (for example, "cure", "prevention", "to help relieve symptoms"). Indicate how—and how soon—the patient should recognize the benefit and what to do if none is observed.
7. Give a balanced evaluation of risks and benefits.
8. List side effects, in order of severity, such as "serious", "most common", and other similar type groupings. It may not be appropriate to provide sufficient detail for the patient to be able to monitor serious or common side effects. Provide guidance to consult the doctor or pharmacist, and indicate that not all the side effects are listed.
9. List sufficiently specific and comprehensive information that includes the provision of all important risk information. Patients should be advised to be sure to inform the provider about all the medicines they are taking.

[1] In December 1996, the "Action Plan for the Provision of Useful Prescription Medicine Information" was presented to the Secretary of Health and Human Services. The plan, commonly known as the "Keystone Plan," described certain criteria for written prescription medicine information. These criteria are described in detail in the action plan, which can be found at www.fda.gov/cder/offices/ods/keystone.pdf.

10. Indicate the potential for therapeutic duplication if the drug is available under multiple names or over-the-counter, or if the active ingredient is contained in other products.
11. If known, include a statement concerning the safety of use in the presence of other conditions and during pregnancy or breast-feeding. Direct affected patients to discuss their condition with health care providers. If the safety of use during pregnancy or breast-feeding has not been established, say so.
12. State whether safety and efficacy have been established in pediatric, geriatric, and other special populations. Patients should be encouraged to discuss with their health care provider any recommendations for dosage adjustment.
13. Illustrate information with diagrams when appropriate. Label the diagram components (for example, device parts) if they are not obvious. The words on the label should be prominently placed thereon with such conspicuousness and in such terms as to render them likely to be read and understood by the ordinary individual under customary conditions of purchase and use.
14. Include the following:
    a. A statement that the product is to be used only by the person for whom it was prescribed,
    b. Storage information,
    c. A completeness disclaimer advising the patient to discuss this issue with the health care provider,
    d. The publisher of the leaflet and the date the leaflet was developed or revised,
    e. Sources of in-depth information and answers to questions, and
    f. Other relevant general statements.
15. The patient should be advised about risks of developing dependence on, or tolerance to, the medication.

ACCESSIBILITY GUIDELINES

1. Write text that is relevant to the intended use of the drug.
2. Design the leaflets to be easy to recognize, consistent in format, and easy to store and retrieve.
3. Supplement the leaflets with oral counseling of patients, including children, the elderly, and caregivers.
4. Include a statement asking the patient to reread the leaflet.
5. Distribute the leaflets with all prescription medicines to consumers (namely, persons independently responsible for any aspect of medicine use or for giving medicines to others).
6. Produce leaflets in Spanish, English, or other languages; and establish criteria for producing them in other languages and for special populations (for example, children, visually handicapped) [Note—Ideally, prescription drug information leaflets would be customized for the patient's condition and for other relevant information (for example, gender, age, or physical limitations), and would be available in the patient's primary language. Currently, such customization is neither feasible nor practical, but it remains a goal.]

Photo courtesy of CriticalPoint, LLC

By Kate Douglass, MS, RN, APN,C, CRNI, and Eric S. Kastango, MBA, RPh, FASHP

Requirements and Best Practices for **Sanitizing Engineering Controls**

Poor cleaning practices are associated with microbial contamination of compounded sterile preparations (CSPs), and consequently performing appropriate daily and monthly cleaning are vital to risk prevention. Though the professional literature contains an abundance of information detailing policies and procedures (P&Ps) for cleaning sterile compounding primary and secondary engineering controls, much misunderstanding, misinterpretation, and myth continues to surround this topic. CriticalPoint's 2013 pharmacy compliance survey revealed the overall compliance with cleaning-related elements required by USP Chapter <797> to be 73%; thus, the need for improvement still exists (see **SIDEBAR**). Addressing these challenging domains—by utilizing the best available data—will ensure correct cleaning practices and dispel common cleaning myths (see **TABLE 1**).

Clarifying common terminology is the first step toward ensuring an accurate understanding of cleaning concepts. Cleaning is a mechanical process using detergent and water to remove dirt, debris, and germs, and is performed to prepare a surface for disinfection. Sanitizing is a chemical process used to decrease the number of germs on cleaned surfaces to a safe level. Disinfecting is another chemical process that destroys 100% of the harmful bacteria, viruses, and fungi on surfaces, but does not necessarily destroy their spores; sporicidal agents are those that kill microorganisms and their spores. Therefore, what is often described as a cleaning program would be more accurately defined as a sanitization program, whereby cleaning and disinfecting results in an environment that is suitable for sterile compounding and surface microbial bioburden is reduced to safe levels. Regardless of the proper use of particulate-free HEPA filtered first air, hand hygiene, garbing, disinfection of gloves, proper aseptic technique, and cleaning of surfaces, the actual environment where compounding is performed is not completely sterile; therefore, the term sanitization is more appropriate.

TABLE 1

Common Cleaning Myths

Cleaning Myth	Requirement/Best Practice
Use 70% isopropyl alcohol (IPA) only for cleaning.	Refer to Appendix II of USP <797> for a list of germicidal detergents (eg, quaternary ammonium or phenolic) in addition to sterile IPA (sIPA).
Rotate cleaning agents.	Rotation is not required or necessary. Use germicidal detergent daily. A sporicidal agent should be used monthly (or more frequently) depending on environmental sampling results.
Clean inside primary engineering controls (PECs) with sIPA daily.	Clean inside PECs daily with diluted germicidal detergent daily followed by sIPA.
Dilute designated cleaning agent with tap water.	Dilute designated cleaning agent with sterile water for use inside ISO Class 5 space and tap water elsewhere.
sIPA and/or germicidal detergents can be used to deactivate hazardous drugs (HDs).	2% sodium hypochlorite (or other agents per drug SDS [previously MSDS]) must be used to deactivate HD residues inside BSCs/CACIs before cleaning with a germicidal detergent and sIPA.

Used with permission from CriticalPoint, LLC; Copyright © 2013 CriticalPoint – All Rights Reserved

Types and Rotation of Cleaning Agents

Though United States Pharmacopeia (USP) Chapter <797> does not recommend specific germicidal detergents, it identifies the common classes of disinfectants and the corresponding properties of each (see Appendix II).[1] Another helpful resource is USP Chapter <1072> Disinfectants and Antiseptics, which suggests the daily use of a bactericidal disinfectant with weekly (or monthly) use of a sporicidal agent.[2]

The rotation of cleaning agents has been a suggested practice; however, this concept is commonly misused when applied to controlled environment sanitization programs. Chapter <1072> states that the development of microbial resistance to disinfectants is not likely, as "disinfectants are more powerful biocidal agents than antibiotics and they are applied in high concentrations against low populations of microorganisms usually not growing actively, so the selective pressure for the development of resistance is less profound."[2] Therefore, it is not valid to apply the model of antibiotic resistance to the mode of action of disinfectants.[3] Antibiotic resistance occurs when microorganisms actually alter their structure to render them resistant to the action of the antibiotic, whereas disinfectants work through a chemical action that destroys the cell membrane or other structures. As such, daily use of a germicidal detergent, with periodic use of a sporicidal agent, is recommended.

Tap Water vs Sterile Water

Cleaning must be performed with a germicidal detergent mixed with water, but USP Chapter <797> is not clear with regard to the type of water to be used. Though the chapter does not explicitly require the use of sterile water inside of primary engineering controls (PECs), it states "water-soluble solid residues are removed with sterile water (for injection or irrigation) and low-shedding wipes."[2] It stands to reason then if the Chapter instructs compounders to wipe solid residues with sterile water, then it is likely that the intention of the committee was to require the use of sterile water inside of the ISO Class 5 space. Just as the mandate for sterile gloves is made in order to ensure that compounding is begun with a known zero bioburden state on gloved hands, the use of sterile water makes similar sense.

Tap water has significantly higher amounts of both colony-forming units (CFUs) and pyrogens (see online-only **TABLE 2** at www.pppmag.com/waterbioburden). Though the inside of PECs is not sterile and the cleaning supplies (low-linting wipes and buckets) are not sterile, the use of sterile water dramatically reduces the level of bioburden introduced while cleaning PECs. However, tap water can be used to dilute the designated germicidal detergent used to clean the secondary engineering controls (SECs; buffer and ante-areas).

Don't miss out on premium content
www.pppmag.com/subscribe

Proper Dilution and Documentation of the Germicidal Detergent and Sporicidal Agent

Follow the manufacturer's instructions to dilute the germicidal detergent. The practice of "eyeballing it" is common; however, this has resulted in solutions that are too dilute, ineffective, and have later been tied to environmental sampling action level excursions, making it clear this practice should be avoided. Some type of measuring device, such as a graduated cylinder, should be kept at the ante-room sink for measurement of cleaning solutions. To prevent the risk of splashing, the cleaning agent should be added to the desired amount of water. Though not specifically required by the Chapter, it is considered best practice to document the preparation of cleaning solutions. To ensure accurate dilution, use a solution preparation log that includes the volume of the designated agent required for commonly used volumes of water and also specifies the type of water to be used.

Where is a Germicidal Detergent Used?

The designated germicidal detergent is used in all of the following locations:

- On all surfaces inside of the PECs used at your facility: laminar air flow workbenches (LAFWs), biological safety cabinets (BSCs), compounding aseptic isolators (CAIs), compounding aseptic containment isolators (CACIs), as well as integrated vertical laminar flow workbenches
- Ceilings
- Walls/doors/handles/pass-throughs
- All surfaces of furniture
- Outside surfaces of PECs
- Floors of rooms and full height pass-throughs

Cleaning Supplies

Cleaning supplies must be dedicated to the area of use. If conventional cellulose mop heads are used, then each area must have a mop dedicated for use in that location unless the mop head is changed between areas or a specific cleaning order is accomplished and the cellulose mop head discarded. For example, the same cellulose mop head could be used to clean all of the following areas in the buffer and ante-areas only if they are cleaned in this order: ceilings, walls, floors, and then disposed. The depth and variety of cleaning supplies available today offer more flexibility and have improved dramatically from those available even 10 years ago. A popular choice is to use stainless or plastic mop handles that utilize changeable mop heads and covers. All mops should be hung on the wall; supplies for cleaning are generally kept on the clean side of the ante-area convenient to the sink. Be sure to purchase buckets that are large enough to accommodate the mop used, incorporate a wringer, and have gradations either in liters or gallons so that staff can measure exactly how much water is in the bucket.

Ergonomic issues also should be considered. Each gallon of water equals 8.34 pounds, so a bucket containing 3 gallons of water–a common amount used for cleaning floors–weighs 25 pounds. Staff should be trained in using appropriate body mechanics for lifting buckets of cleaning solution to prevent injury. Some newer ante-room designs incorporate a tap water spigot that is located near the floor to fill buckets easily. Use of a bucket cart to move the cleaning solution from area to area is also strongly encouraged.

Staff may be required to wear safety goggles when there is a risk of splashing or dripping of cleaning fluids, for example, during cleaning solution preparation or when cleaning ceilings. Buckets must be rinsed, dried, and stored in an inverted position so there is no standing water in which microbial contamination could proliferate. Low-linting wipers should be used in all controlled sterile compounding environments; these wipes can be purchased dry or prewetted with a variety of agents.

CRITICALPOINT'S 2013 <797> SURVEY

Overall Compliance with Cleaning-related Elements Required by USP Chapter <797>*

Compounding Facility Management: Cleaning and Disinfecting	
Cleaning materials that are reused (mop handles, mop heads, etc) are labeled according to their location of use AND policies and procedures have been developed regarding maintenance of the reusable items so that repeated use does not increase the bioburden of the controlled environments.	45.5%
Easily cleanable horizontal work surfaces in the buffer (cleanroom), ante- or segregated compounding areas are cleaned daily and documented.	69.0%
Floors in the buffer area, ante-area, or segregated compounding area are cleaned daily with the designated cleaning agent after compounding has been completed and this activity is documented.	67.5%
Personnel who perform cleaning receive training in and successfully pass initial and ongoing competency assessments in both of these areas: 1) Hand hygiene and garbing (which includes gloved fingertip sampling) and 2) Cleaning and disinfecting.	56.9%
Sterile 70% isopropyl alcohol (sIPA) is allowed to remain in contact with surfaces to be disinfected for 10-30 seconds before compounding activities are started.	79.0%
Mops, wipers, and other cleaning equipment are non-shedding and if reusable, they are dedicated to use in the buffer area, ante-area, or segregated compounding area.	74.2%
Only trained compounding personnel clean inside of the ISO Class 5 work areas.	96.0%
Supplies, components, and other items required for compounding are removed from their outer packaging before entering the buffer area.	94.8%
The critical areas inside the ISO Class 5 environments are cleaned and disinfected at the beginning of each work shift, between batches, every 30 minutes during continuous compounding, when there are spills, and in the event of or suspicion of procedural breach.	80.5%
Trained personnel use written policies and procedures that detail cleaning agents, non-shedding wipes, mop materials, procedures for cleaning, frequency of cleaning, and documentation forms.	74.7%
Walls, ceilings, emptied shelving and supply bins are cleaned at least monthly with designated cleaning agent and documented.	74.0%
Overall Compliance with Cleaning Domain	**73.3%**

Used with permission from CriticalPoint, LLC; Copyright © 2013 CriticalPoint – All Rights Reserved
*N=1045

IPA: Sterile or Nonsterile?

Sterile 70% isopropyl alcohol (sIPA) must be used in the following situations:

- To disinfect all surfaces inside the PECs after the daily cleaning with the germicidal detergent and sterile water
- Inside the PEC at the beginning of the compounding day/shift, before starting each batch, every 30 minutes, when visibly soiled, after a spill, and whenever contamination is suspected
- To sanitize sterile gloves anytime gloved hands leave the ISO Class 5 space and after touching non-sterile items
- To wipe off items before placing them inside the ISO Class 5 area
- To disinfect any critical site before it is accessed by vigorously wiping in one direction three times and allowing the sIPA to dry before use

TABLE 3
Cleaning Primary Engineering Controls

What is the same?	What is different?
1. Complete hand hygiene and garbing appropriate to compounding area 2. Cleaning solution is germicidal detergent; sporicidal may be rotated in weekly or monthly 3. Cleaning solution prepared in container dedicated for use in ISO Class 5 areas and documented 4. All surfaces cleaned with cleaning agent diluted with sterile water 5. Use low-linting wipes and/or tools dedicated to ISO Class 5 areas 6. Disinfect all surfaces with sterile 70% IPA (sIPA) after cleaning 7. Order of cleaning with cleaning agent followed by sIPA: ■ Ceiling ■ Back ■ Sides, IV bar and hooks ■ Anything in PEC ■ Deck	**LAFW: Same** **Integrated VLF: Same except** ■ Surfaces need to be reached with mop ■ Clean/disinfect inside surface of polycarbonate resin **CAI: Same except** ■ Surfaces may need to be reached with isolator tool (preferable to open CAI if in controlled space) ■ Surfaces of main chamber are cleaned and disinfected followed by the ante-chamber and in same order **BSC: If used for HD, same except** ■ Add 1st step: deactivate HD residue on all surfaces with appropriate agent followed by cleaning agent and sIPA ■ Additional surface to decontaminate/clean (inside of the sash view screen) ■ PPE/trash from decontamination discarded in black RCRA bag; rest discarded in yellow HD trace trash. **CACI: If used for HD same except** ■ Add 1st step: deactivate HD residue on all surfaces with appropriate agent followed by cleaning agent and sIPA ■ Surfaces may need to be reached with isolator tool (preferable to open CACI if in controlled space) ■ Surfaces of main chamber are decontaminated and cleaned followed by the ante-chamber and in same order ■ Additional surface to decontaminate/clean (inside of the sash view screen) ■ PPE/trash from decontamination discarded in black RCRA bag; rest discarded in yellow HD trace trash.

Used with permission from CriticalPoint, LLC; Copyright © 2013 CriticalPoint – All Rights Reserved

General Principles of Cleaning

While there is more than one correct way to perform cleaning, there are some guiding principles that should be employed when developing P&Ps. Begin by requiring cleaning from top to bottom, and from the cleanest to the dirtiest areas. During daily cleaning, the PECs are generally cleaned first, followed by all easily cleanable horizontal surfaces in the buffer area, ante-area or segregated compounding area, while floors are cleaned last. Clean from the farthest area moving out of the controlled environment as cleaning occurs. Wipe in one direction (rather than in circles) and overlap each row so the entire surface is completely wetted with the cleaning agent. All surfaces need to be visibly wetted, but not dripping, and the agent must be allowed to air dry. This additional wait time is critical to achieving the desired effectiveness. Staff performing cleaning must perform hand hygiene and garb as appropriate to the area being cleaned (eg, hazardous vs non-hazardous).

Material Handling Considerations

The Chapter requires that "supplies and equipment from shipping cartons shall be wiped with a suitable disinfecting agent (eg, 70% IPA) delivered from a spray bottle or other suitable delivery method. After the disinfectant is sprayed or wiped on the given surface to be disinfected, the disinfectant shall be allowed to dry, during which time the items shall not be used for compounding purposes."[1] Remember that the particles produced by corrugated cardboard can carry any microorganism; however, it has been found that corrugated cardboard is an especially suitable growth medium for mold and its spores. Though the use of 70% IPA is appropriate to wipe down supplies and drug containers brought into the cleanroom, one might also consider the use of a sporicidal agent, such as Steriplex SD, that destroys spores, bacteria, viruses, and fungi. This particular agent is non-corrosive, non-fuming, non-toxic, is not a skin irritant or sensitizer, and thus reduces the risk to staff and cleanroom furniture.

Cleaning PECs

In keeping with the general top to bottom, cleanest to dirtiest rules, the surfaces of all PECs should be cleaned in the same order: ceiling; back; sides, IV bar, and hangers; anything on the deck (automated compounding devices, sharps units, etc); and the deck itself.

When cleaning isolators, there are additional surfaces to be cleaned; again, in keeping with the general rules, the surfaces of the main chamber are cleaned in the order outlined above, followed by those same surfaces in the isolator ante-chamber. Isolators may be cleaned with the front panel open or closed. If they are cleaned with the front panel closed, then an isolator cleaning tool will be required to reach all surfaces inside.

It is perfectly acceptable to open CAIs to clean them, as it is easier to reach and properly clean all surfaces and makes cleaning more efficient. If the CAI is in a controlled space (ISO Class 7 or 8), then it is recommended that you clean the unit by opening the front cover. If your CAI resides in a segregated compounding area (non–ISO-classified area), you may still open the unit to clean it with the germicidal detergent diluted with sterile water; however, close the unit to disinfect the surfaces with sIPA. If a CAI is opened for cleaning, it must be allowed to operate for about 10 minutes before restarting compounding activities. If cleaning with a closed cover, all cleaning items (isolator cleaning tool, cleaning tool heads wetted with germicidal detergent diluted with sterile water, sIPA spray bottle, and low-linting wipes or pre-wetted wipes) must be transferred in to the isolator through the ante-chamber. Whether open or closed, clean the isolator surfaces in the same manner as other PECs, and remember to clean the front view cover of both the ante-chamber and main chamber. Most CAIs have a sliding tray in the ante-chamber that must be moved to clean underneath it with both germicidal detergent solution followed by sIPA.

Considerations for Cleaning Hazardous Drug PECs

Before cleaning BSCs and CACIs, all of the surfaces to be cleaned must be decontaminated by using an appropriate agent to deactivate the hazardous drug (HD) residue. Even though compounding is not occurring, the process of deactivating the HDs can cause the residues to volatilize; therefore, a dual chamber respirator must be worn during this decontamination process. A dual chamber respirator that traps both particles and gases is required during the decontamination step; an N-95 respirator is not sufficient as it traps only particles.

The Safety Data Sheets (SDS, formerly MSDS) for each drug provides information about the chemicals that can be used to deactivate them. Many HDs are deactivated by 2% sodium hypochlorite solution (bleach). Be aware that many household types of bleach contain 5% to 6% active chlorine, so read the label carefully before diluting the bleach with sterile water. Sodium thiosulfate 0.9% also can be used to deactivate HDs. Decontaminate all surfaces of the BSC or CACI in the same manner described above in terms of surfaces and sequence. After decontamination, follow the same steps to clean with germicidal detergent diluted with sterile water followed by sIPA.

Whether to clean CACIs and BSCs with the front cover or sash open or closed is an area of some controversy. Opening the cover or sash facilitates thorough cleaning. If the cover or sash is opened, ensure that the PEC has not been used for compounding for at least 10 minutes and that it remains on at all times. Anyone

Don't miss out on premium content
www.pppmag.com/subscribe

TABLE 4

Disinfecting PECs and Daily/Monthly Cleaning of SECs

PEC Disinfection	Daily	Monthly
ISO Class 5 PEC* and work surfaces ■ Beginning of day or shift ■ Prior to each batch ■ Every 30 minutes ■ When visibly soiled ■ As spills occur ■ When contamination is suspected	Empty trash ISO Class 5 PEC** Easily cleanable horizontal surfaces in ante- and cleanrooms (including pass-through counter) **Restock daily supply cart** Floors from furthest location in cleanroom out through ante-room (including pass-through floor)	Empty trash Ceiling Walls, pass-throughs Every surface ■ Outside of PECs ■ All carts (top, bottom, wheels, etc) ■ Supply bins ■ Doors, handles, vents ISO Class 5 PEC** **Restock supply cart** Floors (same as daily) **Clean refrigerators, freezers, incubators, etc**

* Disinfect PEC with sterile 70% IPA (sIPA).
** Clean with germicidal detergent diluted with sterile water for irrigation followed by sIPA.
All other surfaces cleaned with germicidal detergent diluted with tap water. Easily cleanable horizontal surfaces can additionally be cleaned with IPA after germicidal detergent.
Best practice recommendations indicated in red; order is best practice recommendation only.
Used with permission from CriticalPoint, LLC; Copyright © 2013 CriticalPoint – All Rights Reserved

in the immediate area must be appropriately garbed. If the CACI is housed in air quality inferior to ISO Class 8, after it is cleaned with diluted germicidal detergent, the front cover must be closed. The disinfection with sIPA should occur with the front cover closed. If the front cover/sash will remain closed during all phases of decontamination and cleaning, then wearing a dual chamber respirator is not necessary, but the use of an isolator cleaning tool is required. **TABLE 3** provides a visual snapshot summarizing the highlights of cleaning PECs.

There is a drip pan underneath the surface of the deck of both CACIs and BSCs; the decks of both of these types of equipment can and should be lifted to be cleaned at least monthly and in the event of a spill. CACIs especially operate under significant negative pressure, and lightweight paper needle covers or even low-linting wipes are sometimes sucked in beneath the deck. The wipers can significantly block airflow, so if you notice a decrease in the airflow in your CACI, check underneath the deck (see online-only **PHOTO** at www.pppmag.com/CACI).

Daily and Monthly Cleaning of SECs

After the PECs are cleaned, the SECs (buffer area and ante-area) are cleaned next, in keeping with the order of cleaning from the cleanest area (PECs) to the dirtiest. It is always best to empty all trash containers (be sure to empty trash at least six feet away from PECs) and restock any supply carts before starting the cleaning process, since the area must be allowed to rest for about 20 minutes at the conclusion of cleaning for all surfaces to dry.

All easily cleanable horizontal surfaces of both the buffer and ante-area must be cleaned with germicidal detergent diluted with tap water on a daily basis. These surfaces include flat solid surfaces such as the seats of stools/chairs, small three-tiered carts, pass-through counters (small pass-throughs that are not full height), tables, sinks, etc. Finally, the floors should be cleaned with the germicidal detergent solution, working from the furthest point in the buffer area (cleanroom) out into the ante-area.

Monthly cleaning includes all of the activities of daily cleaning plus additional tasks. **TABLE 4** provides an overview of the cleaning tasks and the suggested sequence of cleaning. Keeping in mind the rules of top to bottom and cleanest to dirtiest, it is not possible to perform monthly cleaning without violating one of those two rules (eg, top to bottom would require starting with the ceiling, whereas going from cleanest to dirtiest would require starting with the inside of the PECs). A general top to bottom approach to monthly cleaning is suggested; however, it is acceptable if your organization starts the monthly cleaning beginning with the PECs. What is vital is that every single surface of all furniture and supply bins is cleaned with the germicidal detergent solution. Performing the monthly cleaning properly takes time and generally more than one staff member.

To evaluate the time commitment for monthly cleaning, complete the cleaning in its entirety and record the time required in actual FTE hours, rather than just estimating. Plan the staffing accordingly. It is suggested that the activities associated with monthly cleaning occur together on one occasion each month approximately four weeks from the previous instance. If workload requirements do not permit this, it is acceptable to break monthly cleaning tasks up and accomplish them over two to three days, but the mechanism for doing so should be carefully detailed in written P&Ps. Experience has shown that it is not uncommon for elements of monthly cleaning to occur sporadically over month-long periods. For example, ceilings may be cleaned "monthly" in that they are cleaned once in each consecutive month but there may be an eight-week gap between instances where ceilings were cleaned—at the beginning of one month and the very end of the next month. Adherence to strictly controlled cleaning P&Ps will ensure monthly cleaning is completed correctly and on time.

Written P&Ps, Staff Training, and Competency Verification

Staff that perform cleaning must receive training on how to perform those activities and accompanying documentation before they are permitted to clean independently. Training must be based your organization's written P&P. A high degree of specificity is desired in a written P&P so they will serve as a road map providing step-by-step instructions. The P&P must cover the following in detail:

- What to clean (PECs and SECs, as well as other unclassified spaces, such as segregated compounding areas, general preparation or labeling areas, incubators, etc)
- When to clean (daily, monthly, when spills occur, and when microbial contamination is known or suspected [ie, when environmental sampling action levels are triggered])
- How to clean
- What to clean with (which germicidal detergent, use of sporicidal agent, sIPA, decontamination agents, sterile water/tap water, etc)
- Who should clean (which staff members are responsible)
- Training and competency requirements
- Documentation requirements

Documentation forms, whether electronic or paper-based, should be designed to capture required information and to provide visual cues to staff to guide them in their activities, especially with regard to cleaning solutions and specific areas to be cleaned (for an example of a daily/monthly cleaning log for the compounding room and a sample cleaning solution preparation log, visit: www.pppmag.com/logsamples).

Since staff must perform hand hygiene and the garbing appropriate to the space being cleaned (eg, hazardous or non-hazardous), successful demonstration of that competency is required, as well as successful demonstration of the activities in the cleaning competency itself. Chapter USP <797> provides sample competency forms in Appendix III (Hand Hygiene and Garbing) and Appendix V (Cleaning and Disinfection) that can be used to develop your organization's

Don't miss out on premium content
www.pppmag.com/subscribe

TABLE 5

Environmental Sampling Requirements and Best Practice Suggestions

Environmental Sampling Test	Required Frequency	Suggested Best Practice Frequency
Non-Viable Particle Counts	■ At initial facility commissioning ■ Every 6 months during recertification of facility and engineering controls in compounding areas	■ As required in Chapter <797>
Volumetric Air Sampling	■ Every 6 months	■ Weekly for high risk ■ Monthly for low/medium risk
Gloved Fingertip Sampling	■ Initially during garbing x 3 ■ Every 6 months during media fills for high risk ■ Annually during media fill for low/medium risk	■ Initially during garbing x 3 ■ Weekly during media fills for high risk ■ Monthly during media fills for low/medium risk
Surface Sampling	■ Periodic	■ Weekly for high risk ■ Monthly for low/medium risk

Used with permission from CriticalPoint, LLC; Copyright © 2013 CriticalPoint – All Rights Reserved

competency verification documentation. Nevertheless, successful completion of a behavioral checklist under staged observation is not a replacement for observation in the actual work setting while cleaning is occurring.

One element of every successful program is pharmacy leadership's ability to educate compounding staff to understand, believe, and buy in to the importance of proper cleaning to maintaining a state of control so that the risk of introducing contamination into CSPs is reduced. Ongoing observation of cleaning activities is crucial because staff respects what management deems important enough to inspect. Acknowledge the positive behavior of staff that take care to perform cleaning and its accompanying documentation correctly. It is equally important to take the opportunity to provide additional instruction and remediation should observation lead to the identification of behaviors that are not desired.

Observation of cleaning and review of documentation are equally important if cleaning activities are outsourced. Whether these services are provided by a department internal to the organization (eg, hospital environmental services department) or externally to a firm that specializes in cleaning pharmacy controlled environments, there are some additional considerations relevant to the evaluation of whether to outsource cleaning activities. PECs may only be cleaned by properly trained pharmacy compounding staff, and cleaning of PECs cannot be outsourced. If all or some of the daily or monthly cleaning activities are outsourced, these staff must still be trained in the same manner in which you would train pharmacy staff. They must also successfully complete the Hand Hygiene and Garbing and Cleaning and Disinfection competencies. The outsourced cleaning staff does not need to complete the gloved fingertip samples (three consecutive samples of zero CFUs for both hands), since they are not performing any activity inside of the PECs. They do, however, need to complete didactic training, testing, and competency verification before performing cleaning.

An additional concern when non-pharmacy staff perform cleaning inside the pharmacy is potential access to drugs in supply bins inside the non-hazardous and hazardous buffer areas, and so a pharmacist employee should supervise these staff members. Even if these items are sequestered in a locked stainless steel cage, it is still strongly recommended that these staff be routinely observed for compliance with written P&Ps.

Verifying Cleaning Adequacy

An environmental sampling program is designed to provide feedback about whether the PECs and SECs, cleaning and disinfection procedures, and employee work practices work together to result in a suitable environment for sterile compounding. Sampling should be frequent enough to facilitate the early detection of contamination and its sources, which may include personnel, work surfaces, supplies, equipment, and failure of engineering controls. Chapter <797> utilizes several approaches to assess and evaluate microbial and particulate burden, including:

- Particle counts (non-viable)
- Volumetric air sampling (viable)
- Surface sampling (viable)
- Gloved fingertip sampling (viable)

USP Chapter <797> ties viable and non-viable testing to certain conditions as a minimum standard of practice. Moreover, the frequencies of environmental sampling required in the Chapter may not provide sufficient data for meaningful trending; likewise, they may not provide the timely feedback required to facilitate the early detection of a condition that could adversely affect the CSPs made in the facility. **TABLE 5** briefly summarizes the frequency of environmental sampling metrics required by the chapter, as well as suggested best practice frequencies.

Summary

Joining engineering controls and compounding work practices, the design and implementation of a comprehensive sanitization program for sterile compounding environments is one of the three key components of a robust environmental quality management program; the goal of this program is to ensure that a state of control is achieved and maintained. Proper cleaning and disinfection must occur regularly as one way to ensure the environment is suitable for the preparation of sterile medications. The effectiveness of these three components is evaluated by ongoing environmental sampling (see online-only **FIGURE 1** at www.pppmag.com/stateofcontrol). ■

References

1. United States Pharmacopeial Convention, Inc. <797> Pharmaceutical Compounding—Sterile Preparations. *United States Pharmacopeia 36–National Formulary 31.* Rockville, MD: US Pharmacopeial Convention, Inc; 2013.
2. United States Pharmacopeial Convention, Inc. <1072> Disinfectants and Antiseptics. *United States Pharmacopeia 36–National Formulary 31.* Rockville, MD: US Pharmacopeial Convention, Inc; 2013.
3. Sutton S. Disinfectant Rotation – A Microbiologist's View. Controlled Environments. July 2005. http://www.cemag.us/articles/2005/07/disinfectant-rotation-microbiologists-view#.UgE7BZLVB8F Accessed August 9, 2013.

A sample daily/monthly cleaning log for controlled environments is available at: www.pppmag.com/cecleaninglog

Kate Douglass, MS, RN, APN,C, CRNI, is vice president of CriticalPoint, a health care training and development company. She is one of the 2013 USP <797> Compliance Study co-directors. Kate has personally supervised the design, engineering, and build of several pharmacy compounding facilities that met or exceeded USP requirements and is one of the faculty of CriticalPoint's Sterile Compounding Boot Camp.

Eric S. Kastango, MBA, RPh, FASHP, is the president, CEO, and owner of Clinical IQ LLC, a provider of customized process and educational strategies for the pharmaceutical, medical device, and health care industries. A member of the USP's Compounding Expert Committee from 2005 to 2012, Eric now serves as an Expert Consultant on the USP Council of Experts.

Don't miss out on premium content
www.pppmag.com/subscribe

64B16-28.820 Sterile Products and Special Parenteral/Enteral Compounding.

(1) Sterile Products and Parenteral/Enteral Compounding.

(a) A sterile products and parenteral/enteral compounding pharmacy is a type of special pharmacy as provided by Section 465.0196, F.S., which is limited in scope of pharmacy practice to render sterile products and parenteral/enteral compounding functions. This pharmacy practice facilitates the utilization of certain institutional therapeutic measures by patients in the home environment or by patients in an institutional environment where such pharmacy service is unavailable. Pharmacy services, sterile products and parenteral/enteral products provided by a special sterile products and parenteral/enteral compounding pharmacy pursuant to prescription as defined by Section 465.003(13), F.S., shall be limited to the compounding and/or dispensing of:

1. Sterile preparations for parenteral therapy, parenteral nutrition, and/or
2. Sterile preparations for jejunostomy feeding and sterile irrigation solutions, and/or
3. Sterile preparations of cytotoxic or antineo-plastic agents, and/or
4. Sterile products (i.e., injectables, eye drops, etc.).

(b) Prior to engaging in a sterile products and parenteral/enteral compounding pharmacy practice an entity shall obtain a special sterile products and parenteral/enteral compounding pharmacy permit as provided herein.

(2) Pharmacy Environment. The compounding and dispensing of sterile products and parenteral/enteral prescription preparations within a special sterile products and parenteral/enteral compounding pharmacy shall be accomplished in a pharmacy environment subject to the pharmacy permit laws of this state and in accordance with those requirements for the safe handling of drugs. The environment for this practice shall be set apart, and designed, and equipped to facilitate controlled aseptic conditions. Aseptic techniques shall prevail in this practice to minimize the possibility of microbial contamination.

(3) General Requirements.

(a) A special sterile products and parenteral/enteral compounding pharmacy shall be under the control and supervision of a licensed pharmacist, who shall be designated prescription department manager on the application for a special sterile products and parenteral/enteral compounding pharmacy. The prescription department manager or other licensed qualified pharmacist as provided herein shall be present on duty during all hours of operation of said pharmacy. Changes in prescription department manager shall be reported to the Board of Pharmacy office within 10 days by the permit holder and prescription department manager of record. A prescription department manager of a special sterile products and parenteral/enteral compounding pharmacy shall not be designated prescription department manager of record of more than one special sterile products and parenteral/enteral compounding pharmacy, unless otherwise approved by the Board. The Board will consider the proximity of the facility as well as the administrative workload created by the two permits, in determining whether or not it will approve the designation of someone as a prescription department manager of more than one special sterile products and parenteral/enteral compounding pharmacy.

(b) A special sterile products and parenteral/enteral compounding pharmacy shall provide special handling and packaging of compounded parenteral and enteral preparations when delivering from the pharmacy to the patient or institution as required to maintain stability of the preparations. All such preparations shall include the time and/or date of expiration on the label. Delivery from the pharmacy to the patient shall be made within a reasonable time. A special sterile products and parenteral/enteral compounding pharmacy shall provide telephone accessibility to its pharmacist(s) for its patients at all hours.

(c) A patient profile shall be maintained for each patient. The profile must contain available medical information consistent with prevailing pharmacy standards which shall be confidential.

(d) A Policy and Procedure Manual shall be prepared and maintained at each special sterile products and parenteral/enteral compounding pharmacy, and be available for inspection by authorized agents of the Board of Pharmacy and the Department. The Policy and Procedure Manual shall set forth in detail the objectives and operational guidelines of the permittee. The Policy and Procedure Manual shall include a Quality Assurance Program which monitors personnel qualifications, training and performance, equipment facilities, and random production sampling consistent with recommended standards for compounding and dispensing intravenous admixtures as set forth by the Joint Commission on Accreditation of Health Organizations, the National Coordinating Committee and Large Volume Parenteral, and as provided by the Florida Board of Pharmacy.

(e) Compounding shall be conducted within an annually certified laminar air flow (LAF) hood, except in the existence of a Class 100 certified compounding environment, or certified mobile isolation chamber, in which case compounding may be conducted without the use of a certified laminar air flow hood. All cytotoxins must be compounded in a certified vertical laminar air flow hood or certified mobile isolation chamber. The use of a Type A or Type B LAF hood used shall be dependent upon the volume of work anticipated. All certifications shall be performed following manufacturer specification.

(f) Protective garb: gloves, face and eye, and gowns should be provided and used.

(g) Proper aseptic procedures must be used at all times to prevent bacterial contamination of the product as well as chemical contamination of the operator.

(h) All unused cytotoxic agents and material must be disposed of properly in accordance with accepted professional standards and applicable law.

(4) An applicant for a special sterile products and parenteral/enteral compounding pharmacy permit shall provide the Board of Pharmacy with the following:

(a) Completed Board of Pharmacy permit application form (Form DPR/PH/107/9-88).

(b) Copy of Policy and Procedure Manual.

(c) Permit fee as provided in Rule 64B16-28.121, F.A.C.

(5) Minimum Requirements for Space, Equipment, Supplies and Publications.

(a) To ensure compliance with the general requirements as set forth, the following minimum requirements for space, equipment, supplies and publications shall be met by a pharmacy which operates under the special permit of a sterile products and parenteral/enteral compounding pharmacy. These requirements are in addition to the minimum requirements for space and equipment required of other types of pharmacies when applicable. The minimum permit requirements are set forth as follows:

(b) Space:

1. The area for preparing sterile prescriptions as provided for by this rule referred to as the sterile admixture room shall be set apart from general work and storage areas. The room shall be adequately air conditioned or shall be under positive pressure.

2. The sterile admixture room shall provide space for a minimum of one laminar flow hood. Additionally, the space shall be of adequate size to accommodate other equipment as provided herein and sufficient space to allow pharmacists and other employees working therein to adequately, safely, and accurately fulfill their duties related to prescriptions.

(c) Equipment:

1. Laminar Air Flow Hood(s):

a. Horizontal and/or.

b. Vertical.

2. Refrigerator/freezer convenient to the clean room.

3. Sink and wash area convenient to the clean room.

4. Appropriate waste containers for:

a. Used needles and syringes.

b. All cytotoxic waste including apparel.

(d) Supplies:

1. Gloves, masks and gowns.

2. Needles and syringes of various standard sizes.

3. Disinfectant cleaning agents.

4. Clean towels.

5. Handwashing materials with bactericidal properties.

6. Vacuum containers and various transfer sets.

7. “Spill kits” for cytotoxic agent spills.

(e) Current References:

1. Chapter 465, F.S.

2. Chapter 499, F.S.

3. Chapter 893, F.S.

4. Title 64B16, F.A.C., Rules of the Florida Board of Pharmacy.

5. United States Pharmacopeia and National Formulary, or Remington Pharmaceutical Sciences, or the United States Dispensatory (along with the latest supplements), or an equivalent thereof sufficient in scope to meet the professional practice needs of the pharmacy, and a current authoritative therapeutic reference.

6. Handbook of Injectable Drugs by American Society of Hospital Pharmacists.

7. “Practice Guidelines For Personnel Dealing With Cytotoxic Drugs.”

~~(6) A community pharmacy permittee may perform parenteral/enteral compounding or prepare sterile products without~~

~~obtaining an additional permit under this section, so long as prior to entering into such activities, the community pharmacy meets the requirements of subsections (1)-(5) above and is inspected for compliance by the Department of Health. A community pharmacy permittee that was engaged in the preparation of sterile products other than parenteral/enteral products as of June 1, 2002 shall have until June 1, 2003 to meet the requirements of subsections (1)-(5) above for the preparation of sterile products other than parenteral/enteral products.~~

Specific Authority 465.005, 465.007, 465.022 FS. Law Implemented 465.007, 465.018, 456.0196 FS. History–New 4-26-84, Formerly 21S-1.40, Amended 7-27-86, Formerly 21S-1.040, Amended 7-31-91, 10-14-91, Formerly 21S-28.820, 61F10-28.820, Amended 3-11-96, 6-4-97, Formerly 59X-28.820, Amended 7-1-02, 1-29-03.

AUTHENTICATED
U.S. GOVERNMENT
INFORMATION
GPO

H. R. 3204

One Hundred Thirteenth Congress of the United States of America

AT THE FIRST SESSION

Begun and held at the City of Washington on Thursday, the third day of January, two thousand and thirteen

An Act

To amend the Federal Food, Drug, and Cosmetic Act with respect to human drug compounding and drug supply chain security, and for other purposes.

Be it enacted by the Senate and House of Representatives of the United States of America in Congress assembled,

SECTION 1. SHORT TITLE.

This Act may be cited as the "Drug Quality and Security Act".

SEC. 2. REFERENCES IN ACT; TABLE OF CONTENTS.

(a) REFERENCES IN ACT.—Except as otherwise specified, amendments made by this Act to a section or other provision of law are amendments to such section or other provision of the Federal Food, Drug, and Cosmetic Act (21 U.S.C. 301 et seq.).

(b) TABLE OF CONTENTS.—The table of contents of this Act is as follows:

Sec. 1. Short title.
Sec. 2. References in Act; table of contents.

TITLE I—DRUG COMPOUNDING

Sec. 101. Short title.
Sec. 102. Voluntary outsourcing facilities.
Sec. 103. Penalties.
Sec. 104. Regulations.
Sec. 105. Enhanced communication.
Sec. 106. Severability.
Sec. 107. GAO study.

TITLE II—DRUG SUPPLY CHAIN SECURITY

Sec. 201. Short title.
Sec. 202. Pharmaceutical distribution supply chain.
Sec. 203. Enhanced drug distribution security.
Sec. 204. National standards for prescription drug wholesale distributors.
Sec. 205. National standards for third-party logistics providers; uniform national policy.
Sec. 206. Penalties.
Sec. 207. Conforming amendment.
Sec. 208. Savings clause.

TITLE I—DRUG COMPOUNDING

SEC. 101. SHORT TITLE.

This Act may be cited as the "Compounding Quality Act".

SEC. 102. VOLUNTARY OUTSOURCING FACILITIES.

(a) IN GENERAL.—Subchapter A of chapter V (21 U.S.C. 351 et seq.) is amended—

(1) by redesignating section 503B as section 503C; and

(2) by inserting after section 503A the following new section:

"SEC. 503B. OUTSOURCING FACILITIES.

"(a) IN GENERAL.—Sections 502(f)(1), 505, and 582 shall not apply to a drug compounded by or under the direct supervision of a licensed pharmacist in a facility that elects to register as an outsourcing facility if each of the following conditions is met:

"(1) REGISTRATION AND REPORTING.—The drug is compounded in an outsourcing facility that is in compliance with the requirements of subsection (b).

"(2) BULK DRUG SUBSTANCES.—The drug is compounded in an outsourcing facility that does not compound using bulk drug substances (as defined in section 207.3(a)(4) of title 21, Code of Federal Regulations (or any successor regulation)), unless—

"(A)(i) the bulk drug substance appears on a list established by the Secretary identifying bulk drug substances for which there is a clinical need, by—

"(I) publishing a notice in the Federal Register proposing bulk drug substances to be included on the list, including the rationale for such proposal;

"(II) providing a period of not less than 60 calendar days for comment on the notice; and

"(III) publishing a notice in the Federal Register designating bulk drug substances for inclusion on the list; or

"(ii) the drug compounded from such bulk drug substance appears on the drug shortage list in effect under section 506E at the time of compounding, distribution, and dispensing;

"(B) if an applicable monograph exists under the United States Pharmacopeia, the National Formulary, or another compendium or pharmacopeia recognized by the Secretary for purposes of this paragraph, the bulk drug substances each comply with the monograph;

"(C) the bulk drug substances are each manufactured by an establishment that is registered under section 510 (including a foreign establishment that is registered under section 510(i)); and

"(D) the bulk drug substances are each accompanied by a valid certificate of analysis.

"(3) INGREDIENTS (OTHER THAN BULK DRUG SUBSTANCES).—If any ingredients (other than bulk drug substances) are used in compounding the drug, such ingredients comply with the standards of the applicable United States Pharmacopeia or National Formulary monograph, if such monograph exists, or of another compendium or pharmacopeia recognized by the Secretary for purposes of this paragraph if any.

"(4) DRUGS WITHDRAWN OR REMOVED BECAUSE UNSAFE OR NOT EFFECTIVE.—The drug does not appear on a list published by the Secretary of drugs that have been withdrawn or removed from the market because such drugs or components of such drugs have been found to be unsafe or not effective.

"(5) ESSENTIALLY A COPY OF AN APPROVED DRUG.—The drug is not essentially a copy of one or more approved drugs.

"(6) DRUGS PRESENTING DEMONSTRABLE DIFFICULTIES FOR COMPOUNDING.—The drug—

"(A) is not identified (directly or as part of a category of drugs) on a list published by the Secretary, through the process described in subsection (c), of drugs or categories of drugs that present demonstrable difficulties for compounding that are reasonably likely to lead to an adverse effect on the safety or effectiveness of the drug or category of drugs, taking into account the risks and benefits to patients; or

"(B) is compounded in accordance with all applicable conditions identified on the list described in subparagraph (A) as conditions that are necessary to prevent the drug or category of drugs from presenting the demonstrable difficulties described in subparagraph (A).

"(7) ELEMENTS TO ASSURE SAFE USE.—In the case of a drug that is compounded from a drug that is the subject of a risk evaluation and mitigation strategy approved with elements to assure safe use pursuant to section 505–1, or from a bulk drug substance that is a component of such drug, the outsourcing facility demonstrates to the Secretary prior to beginning compounding that such facility will utilize controls comparable to the controls applicable under the relevant risk evaluation and mitigation strategy.

"(8) PROHIBITION ON WHOLESALING.—The drug will not be sold or transferred by an entity other than the outsourcing facility that compounded such drug. This paragraph does not prohibit administration of a drug in a health care setting or dispensing a drug pursuant to a prescription executed in accordance with section 503(b)(1).

"(9) FEES.—The drug is compounded in an outsourcing facility that has paid all fees owed by such facility pursuant to section 744K.

"(10) LABELING OF DRUGS.—

"(A) LABEL.—The label of the drug includes—

"(i) the statement 'This is a compounded drug.' or a reasonable comparable alternative statement (as specified by the Secretary) that prominently identifies the drug as a compounded drug;

"(ii) the name, address, and phone number of the applicable outsourcing facility; and

"(iii) with respect to the drug—

"(I) the lot or batch number;

"(II) the established name of the drug;

"(III) the dosage form and strength;

"(IV) the statement of quantity or volume, as appropriate;

"(V) the date that the drug was compounded;

"(VI) the expiration date;

"(VII) storage and handling instructions;

"(VIII) the National Drug Code number, if available;

"(IX) the statement 'Not for resale', and, if the drug is dispensed or distributed other than pursuant to a prescription for an individual identified patient, the statement 'Office Use Only'; and

"(X) subject to subparagraph (B)(i), a list of active and inactive ingredients, identified by established name and the quantity or proportion of each ingredient.

"(B) CONTAINER.—The container from which the individual units of the drug are removed for dispensing or for administration (such as a plastic bag containing individual product syringes) shall include—

"(i) the information described under subparagraph (A)(iii)(X), if there is not space on the label for such information;

"(ii) the following information to facilitate adverse event reporting: www.fda.gov/medwatch and 1–800–FDA–1088 (or any successor Internet Web site or phone number); and

"(iii) directions for use, including, as appropriate, dosage and administration.

"(C) ADDITIONAL INFORMATION.—The label and labeling of the drug shall include any other information as determined necessary and specified in regulations promulgated by the Secretary.

"(11) OUTSOURCING FACILITY REQUIREMENT.—The drug is compounded in an outsourcing facility in which the compounding of drugs occurs only in accordance with this section.

"(b) REGISTRATION OF OUTSOURCING FACILITIES AND REPORTING OF DRUGS.—

"(1) REGISTRATION OF OUTSOURCING FACILITIES.—

"(A) ANNUAL REGISTRATION.—Upon electing and in order to become an outsourcing facility, and during the period beginning on October 1 and ending on December 31 of each year thereafter, a facility—

"(i) shall register with the Secretary its name, place of business, and unique facility identifier (which shall conform to the requirements for the unique facility identifier established under section 510), and a point of contact email address; and

"(ii) shall indicate whether the outsourcing facility intends to compound a drug that appears on the list in effect under section 506E during the subsequent calendar year.

"(B) AVAILABILITY OF REGISTRATION FOR INSPECTION; LIST.—

"(i) REGISTRATIONS.—The Secretary shall make available for inspection, to any person so requesting, any registration filed pursuant to this paragraph.

"(ii) LIST.—The Secretary shall make available on the public Internet Web site of the Food and Drug Administration a list of the name of each facility registered under this subsection as an outsourcing facility, the State in which each such facility is located, whether the facility compounds from bulk drug substances, and whether any such compounding from bulk drug substances is for sterile or nonsterile drugs.

"(2) DRUG REPORTING BY OUTSOURCING FACILITIES.—

"(A) IN GENERAL.—Upon initially registering as an outsourcing facility, once during the month of June of each

year, and once during the month of December of each year, each outsourcing facility that registers with the Secretary under paragraph (1) shall submit to the Secretary a report—

"(i) identifying the drugs compounded by such outsourcing facility during the previous 6-month period; and

"(ii) with respect to each drug identified under clause (i), providing the active ingredient, the source of such active ingredient, the National Drug Code number of the source drug or bulk active ingredient, if available, the strength of the active ingredient per unit, the dosage form and route of administration, the package description, the number of individual units produced, and the National Drug Code number of the final product, if assigned.

"(B) FORM.—Each report under subparagraph (A) shall be prepared in such form and manner as the Secretary may prescribe by regulation or guidance.

"(C) CONFIDENTIALITY.—Reports submitted under this paragraph shall be exempt from inspection under paragraph (1)(B)(i), unless the Secretary finds that such an exemption would be inconsistent with the protection of the public health.

"(3) ELECTRONIC REGISTRATION AND REPORTING.—Registrations and drug reporting under this subsection (including the submission of updated information) shall be submitted to the Secretary by electronic means unless the Secretary grants a request for waiver of such requirement because use of electronic means is not reasonable for the person requesting waiver.

"(4) RISK-BASED INSPECTION FREQUENCY.—

"(A) IN GENERAL.—Outsourcing facilities—

"(i) shall be subject to inspection pursuant to section 704; and

"(ii) shall not be eligible for the exemption under section 704(a)(2)(A).

"(B) RISK-BASED SCHEDULE.—The Secretary, acting through one or more officers or employees duly designated by the Secretary, shall inspect outsourcing facilities in accordance with a risk-based schedule established by the Secretary.

"(C) RISK FACTORS.—In establishing the risk-based schedule, the Secretary shall inspect outsourcing facilities according to the known safety risks of such outsourcing facilities, which shall be based on the following factors:

"(i) The compliance history of the outsourcing facility.

"(ii) The record, history, and nature of recalls linked to the outsourcing facility.

"(iii) The inherent risk of the drugs compounded at the outsourcing facility.

"(iv) The inspection frequency and history of the outsourcing facility, including whether the outsourcing facility has been inspected pursuant to section 704 within the last 4 years.

"(v) Whether the outsourcing facility has registered under this paragraph as an entity that intends to

compound a drug that appears on the list in effect under section 506E.

"(vi) Any other criteria deemed necessary and appropriate by the Secretary for purposes of allocating inspection resources.

"(5) ADVERSE EVENT REPORTING.—Outsourcing facilities shall submit adverse event reports to the Secretary in accordance with the content and format requirements established through guidance or regulation under section 310.305 of title 21, Code of Federal Regulations (or any successor regulations).

"(c) REGULATIONS.—

"(1) IN GENERAL.—The Secretary shall implement the list described in subsection (a)(6) through regulations.

"(2) ADVISORY COMMITTEE ON COMPOUNDING.—Before issuing regulations to implement subsection (a)(6), the Secretary shall convene and consult an advisory committee on compounding. The advisory committee shall include representatives from the National Association of Boards of Pharmacy, the United States Pharmacopeia, pharmacists with current experience and expertise in compounding, physicians with background and knowledge in compounding, and patient and public health advocacy organizations.

"(3) INTERIM LIST.—

"(A) IN GENERAL.—Before the effective date of the regulations finalized to implement subsection (a)(6), the Secretary may designate drugs, categories of drugs, or conditions as described such subsection by—

"(i) publishing a notice of such substances, drugs, categories of drugs, or conditions proposed for designation, including the rationale for such designation, in the Federal Register;

"(ii) providing a period of not less than 60 calendar days for comment on the notice; and

"(iii) publishing a notice in the Federal Register designating such drugs, categories of drugs, or conditions.

"(B) SUNSET OF NOTICE.—Any notice provided under subparagraph (A) shall not be effective after the earlier of—

"(i) the date that is 5 years after the date of enactment of the Compounding Quality Act; or

"(ii) the effective date of the final regulations issued to implement subsection (a)(6).

"(4) UPDATES.—The Secretary shall review, and update as necessary, the regulations containing the lists of drugs, categories of drugs, or conditions described in subsection (a)(6) regularly, but not less than once every 4 years. Nothing in the previous sentence prohibits submissions to the Secretary, before or during any 4-year period described in such sentence, requesting updates to such lists.

"(d) DEFINITIONS.—In this section:

"(1) The term 'compounding' includes the combining, admixing, mixing, diluting, pooling, reconstituting, or otherwise altering of a drug or bulk drug substance to create a drug.

"(2) The term 'essentially a copy of an approved drug' means—

"(A) a drug that is identical or nearly identical to an approved drug, or a marketed drug not subject to section 503(b) and not subject to approval in an application submitted under section 505, unless, in the case of an approved drug, the drug appears on the drug shortage list in effect under section 506E at the time of compounding, distribution, and dispensing; or

"(B) a drug, a component of which is a bulk drug substance that is a component of an approved drug or a marketed drug that is not subject to section 503(b) and not subject to approval in an application submitted under section 505, unless there is a change that produces for an individual patient a clinical difference, as determined by the prescribing practitioner, between the compounded drug and the comparable approved drug.

"(3) The term 'approved drug' means a drug that is approved under section 505 and does not appear on the list described in subsection (a)(4) of drugs that have been withdrawn or removed from the market because such drugs or components of such drugs have been found to be unsafe or not effective.

"(4)(A) The term 'outsourcing facility' means a facility at one geographic location or address that—

"(i) is engaged in the compounding of sterile drugs;

"(ii) has elected to register as an outsourcing facility; and

"(iii) complies with all of the requirements of this section.

"(B) An outsourcing facility is not required to be a licensed pharmacy.

"(C) An outsourcing facility may or may not obtain prescriptions for identified individual patients.

"(5) The term 'sterile drug' means a drug that is intended for parenteral administration, an ophthalmic or oral inhalation drug in aqueous format, or a drug that is required to be sterile under Federal or State law.".

"(d) OBLIGATION TO PAY FEES.—Payment of the fee under section 744K, as described in subsection (a)(9), shall not relieve an outsourcing facility that is licensed as a pharmacy in any State that requires pharmacy licensing fees of its obligation to pay such State fees.".

(b) FEES.—Subchapter C of chapter VII (21 U.S.C. 379f et seq.) is amended by adding at the end the following:

"PART 9—FEES RELATING TO OUTSOURCING FACILITIES

"SEC. 744J. DEFINITIONS.

"In this part:

"(1) The term 'affiliate' has the meaning given such term in section 735(11).

"(2) The term 'gross annual sales' means the total worldwide gross annual sales, in United States dollars, for an outsourcing facility, including the sales of all the affiliates of the outsourcing facility.

"(3) The term 'outsourcing facility' has the meaning given to such term in section 503B(d)(4).

"(4) The term 'reinspection' means, with respect to an outsourcing facility, 1 or more inspections conducted under section 704 subsequent to an inspection conducted under such provision which identified noncompliance materially related to an applicable requirement of this Act, specifically to determine whether compliance has been achieved to the Secretary's satisfaction.

"SEC. 744K. AUTHORITY TO ASSESS AND USE OUTSOURCING FACILITY FEES.

"(a) ESTABLISHMENT AND REINSPECTION FEES.—

"(1) IN GENERAL.—For fiscal year 2015 and each subsequent fiscal year, the Secretary shall, in accordance with this subsection, assess and collect—

"(A) an annual establishment fee from each outsourcing facility; and

"(B) a reinspection fee from each outsourcing facility subject to a reinspection in such fiscal year.

"(2) MULTIPLE REINSPECTIONS.—An outsourcing facility subject to multiple reinspections in a fiscal year shall be subject to a reinspection fee for each reinspection.

"(b) ESTABLISHMENT AND REINSPECTION FEE SETTING.—The Secretary shall—

"(1) establish the amount of the establishment fee and reinspection fee to be collected under this section for each fiscal year based on the methodology described in subsection (c); and

"(2) publish such fee amounts in a Federal Register notice not later than 60 calendar days before the start of each such year.

"(c) AMOUNT OF ESTABLISHMENT FEE AND REINSPECTION FEE.—

"(1) IN GENERAL.—For each outsourcing facility in a fiscal year—

"(A) except as provided in paragraph (4), the amount of the annual establishment fee under subsection (b) shall be equal to the sum of—

"(i) $15,000, multiplied by the inflation adjustment factor described in paragraph (2); plus

"(ii) the small business adjustment factor described in paragraph (3); and

"(B) the amount of any reinspection fee (if applicable) under subsection (b) shall be equal to $15,000, multiplied by the inflation adjustment factor described in paragraph (2).

"(2) INFLATION ADJUSTMENT FACTOR.—

"(A) IN GENERAL.—For fiscal year 2015 and subsequent fiscal years, the fee amounts established in paragraph (1) shall be adjusted by the Secretary by notice, published in the Federal Register, for a fiscal year by the amount equal to the sum of—

"(i) 1;

"(ii) the average annual percent change in the cost, per full-time equivalent position of the Food and Drug Administration, of all personnel compensation and benefits paid with respect to such positions for the first 3 years of the preceding 4 fiscal years, multiplied by the proportion of personnel compensation and

benefits costs to total costs of an average full-time equivalent position of the Food and Drug Administration for the first 3 years of the preceding 4 fiscal years; plus

"(iii) the average annual percent change that occurred in the Consumer Price Index for urban consumers (U.S. City Average; Not Seasonally Adjusted; All items; Annual Index) for the first 3 years of the preceding 4 years of available data multiplied by the proportion of all costs other than personnel compensation and benefits costs to total costs of an average full-time equivalent position of the Food and Drug Administration for the first 3 years of the preceding 4 fiscal years.

"(B) COMPOUNDED BASIS.—The adjustment made each fiscal year under subparagraph (A) shall be added on a compounded basis to the sum of all adjustments made each fiscal year after fiscal year 2014 under subparagraph (A).

"(3) SMALL BUSINESS ADJUSTMENT FACTOR.—The small business adjustment factor described in this paragraph shall be an amount established by the Secretary for each fiscal year based on the Secretary's estimate of—

"(A) the number of small businesses that will pay a reduced establishment fee for such fiscal year; and

"(B) the adjustment to the establishment fee necessary to achieve total fees equaling the total fees that the Secretary would have collected if no entity qualified for the small business exception in paragraph (4).

"(4) EXCEPTION FOR SMALL BUSINESSES.—

"(A) IN GENERAL.—In the case of an outsourcing facility with gross annual sales of $1,000,000 or less in the 12 months ending April 1 of the fiscal year immediately preceding the fiscal year in which the fees under this section are assessed, the amount of the establishment fee under subsection (b) for a fiscal year shall be equal to \1/3\ of the amount calculated under paragraph (1)(A)(i) for such fiscal year.

"(B) APPLICATION.—To qualify for the exception under this paragraph, a small business shall submit to the Secretary a written request for such exception, in a format specified by the Secretary in guidance, certifying its gross annual sales for the 12 months ending April 1 of the fiscal year immediately preceding the fiscal year in which fees under this subsection are assessed. Any such application shall be submitted to the Secretary not later than April 30 of such immediately preceding fiscal year.

"(5) CREDITING OF FEES.—In establishing the small business adjustment factor under paragraph (3) for a fiscal year, the Secretary shall—

"(A) provide for the crediting of fees from the previous year to the next year if the Secretary overestimated the amount of the small business adjustment factor for such previous fiscal year; and

"(B) consider the need to account for any adjustment of fees and such other factors as the Secretary determines appropriate.

"(d) USE OF FEES.—The Secretary shall make all of the fees collected pursuant to subparagraphs (A) and (B) of subsection (a)(1) available solely to pay for the costs of oversight of outsourcing facilities.

"(e) SUPPLEMENT NOT SUPPLANT.—Funds received by the Secretary pursuant to this section shall be used to supplement and not supplant any other Federal funds available to carry out the activities described in this section.

"(f) CREDITING AND AVAILABILITY OF FEES.—Fees authorized under this section shall be collected and available for obligation only to the extent and in the amount provided in advance in appropriations Acts. Such fees are authorized to remain available until expended. Such sums as may be necessary may be transferred from the Food and Drug Administration salaries and expenses appropriation account without fiscal year limitation to such appropriation account for salaries and expenses with such fiscal year limitation. The sums transferred shall be available solely for the purpose of paying the costs of oversight of outsourcing facilities.

"(g) COLLECTION OF FEES.—

"(1) ESTABLISHMENT FEE.—An outsourcing facility shall remit the establishment fee due under this section in a fiscal year when submitting a registration pursuant to section 503B(b) for such fiscal year.

"(2) REINSPECTION FEE.—The Secretary shall specify in the Federal Register notice described in subsection (b)(2) the manner in which reinspection fees assessed under this section shall be collected and the timeline for payment of such fees. Such a fee shall be collected after the Secretary has conducted a reinspection of the outsourcing facility involved.

"(3) EFFECT OF FAILURE TO PAY FEES.—

"(A) REGISTRATION.—An outsourcing facility shall not be considered registered under section 503B(b) in a fiscal year until the date that the outsourcing facility remits the establishment fee under this subsection for such fiscal year.

"(B) MISBRANDING.—All drugs manufactured, prepared, propagated, compounded, or processed by an outsourcing facility for which any establishment fee or reinspection fee has not been paid, as required by this section, shall be deemed misbranded under section 502 until the fees owed for such outsourcing facility under this section have been paid.

"(4) COLLECTION OF UNPAID FEES.—In any case where the Secretary does not receive payment of a fee assessed under this section within 30 calendar days after it is due, such fee shall be treated as a claim of the United States Government subject to provisions of subchapter II of chapter 37 of title 31, United States Code.

"(h) ANNUAL REPORT TO CONGRESS.—Not later than 120 calendar days after each fiscal year in which fees are assessed and collected under this section, the Secretary shall submit a report to the Committee on Health, Education, Labor, and Pensions of the Senate and the Committee on Energy and Commerce of the House of Representatives, to include a description of fees assessed and collected for such year, a summary description of entities paying the fees, a description of the hiring and placement of new staff, a description of the use of fee resources to support inspecting

outsourcing facilities, and the number of inspections and reinspections of such facilities performed each year.

"(i) AUTHORIZATION OF APPROPRIATIONS.—For fiscal year 2014 and each subsequent fiscal year, there is authorized to be appropriated for fees under this section an amount equivalent to the total amount of fees assessed for such fiscal year under this section.".

SEC. 103. PENALTIES.

(a) PROHIBITED ACTS.—Section 301 (21 U.S.C. 331) is amended by adding at the end the following:

"(ccc)(1) The resale of a compounded drug that is labeled 'not for resale' in accordance with section 503B.

"(2) With respect to a drug to be compounded pursuant to section 503A or 503B, the intentional falsification of a prescription, as applicable.

"(3) The failure to report drugs or adverse events by an entity that is registered in accordance with subsection (b) of section 503B.".

(b) MISBRANDED DRUGS.—Section 502 (21 U.S.C. 352) is amended by adding at the end the following:

"(bb) If the advertising or promotion of a compounded drug is false or misleading in any particular.".

SEC. 104. REGULATIONS.

In promulgating any regulations to implement this title (and the amendments made by this title), the Secretary of Health and Human Services shall—

(1) issue a notice of proposed rulemaking that includes the proposed regulation;

(2) provide a period of not less than 60 calendar days for comments on the proposed regulation; and

(3) publish the final regulation not more than 18 months following publication of the proposed rule and not less than 30 calendar days before the effective date of such final regulation.

SEC. 105. ENHANCED COMMUNICATION.

(a) SUBMISSIONS FROM STATE BOARDS OF PHARMACY.—In a manner specified by the Secretary of Health and Human Services (referred to in this section as the "Secretary"), the Secretary shall receive submissions from State boards of pharmacy—

(1) describing actions taken against compounding pharmacies, as described in subsection (b); or

(2) expressing concerns that a compounding pharmacy may be acting contrary to section 503A of the Federal Food, Drug, and Cosmetic Act (21 U.S.C. 353a).

(b) CONTENT OF SUBMISSIONS FROM STATE BOARDS OF PHARMACY.—An action referred to in subsection (a)(1) is, with respect to a pharmacy that compounds drugs, any of the following:

(1) The issuance of a warning letter, or the imposition of sanctions or penalties, by a State for violations of a State's pharmacy regulations pertaining to compounding.

(2) The suspension or revocation of a State-issued pharmacy license or registration for violations of a State's pharmacy regulations pertaining to compounding.

(3) The recall of a compounded drug due to concerns relating to the quality or purity of such drug.

(c) CONSULTATION.—The Secretary shall implement subsection (a) in consultation with the National Association of Boards of Pharmacy.

(d) NOTIFYING STATE BOARDS OF PHARMACY.—The Secretary shall immediately notify State boards of pharmacy when—

(1) the Secretary receives a submission under subsection (a)(1); or

(2) the Secretary makes a determination that a pharmacy is acting contrary to section 503A of the Federal Food, Drug, and Cosmetic Act.

SEC. 106. SEVERABILITY.

(a) IN GENERAL.—Section 503A (21 U.S.C. 353a) is amended—

(1) in subsection (a), in the matter preceding paragraph (1), by striking "unsolicited";

(2) by striking subsection (c);

(3) by redesignating subsections (d) through (f) as subsections (c) through (e), respectively; and

(4) in subsection (b)(1)(A)(i)(III), by striking "subsection (d)" and inserting "subsection (c)".

(b) SEVERABILITY.—If any provision of this Act (including the amendments made by this Act) is declared unconstitutional, or the applicability of this Act (including the amendments made by this Act) to any person or circumstance is held invalid, the constitutionality of the remainder of this Act (including the amendments made by this Act) and the applicability thereof to other persons and circumstances shall not be affected.

SEC. 107. GAO STUDY.

(a) STUDY.—Not later than 36 months after the date of the enactment of this Act, the Comptroller General of the United States shall submit to Congress a report on pharmacy compounding and the adequacy of State and Federal efforts to assure the safety of compounded drugs.

(b) CONTENTS.—The report required under this section shall include—

(1) a review of pharmacy compounding in each State, and the settings in which such compounding occurs;

(2) a review of the State laws and policies governing pharmacy compounding, including enforcement of State laws and policies;

(3) an assessment of the available tools to permit purchasers of compounded drugs to determine the safety and quality of such drugs;

(4) an evaluation of the effectiveness of the communication among States and between States and the Food and Drug Administration regarding compounding; and

(5) an evaluation of the Food and Drug Administration's implementation of sections 503A and 503B of the Federal Food, Drug, and Cosmetic Act.

TITLE II—DRUG SUPPLY CHAIN SECURITY

SEC. 201. SHORT TITLE.

This title may be cited as the "Drug Supply Chain Security Act".

SEC. 202. PHARMACEUTICAL DISTRIBUTION SUPPLY CHAIN.

Chapter V (21 U.S.C. 351 et seq.) is amended by adding at the end the following:

"Subchapter H—Pharmaceutical Distribution Supply Chain

"SEC. 581. DEFINITIONS.

"In this subchapter:

"(1) AFFILIATE.—The term 'affiliate' means a business entity that has a relationship with a second business entity if, directly or indirectly—

"(A) one business entity controls, or has the power to control, the other business entity; or

"(B) a third party controls, or has the power to control, both of the business entities.

"(2) AUTHORIZED.—The term 'authorized' means—

"(A) in the case of a manufacturer or repackager, having a valid registration in accordance with section 510;

"(B) in the case of a wholesale distributor, having a valid license under State law or section 583, in accordance with section 582(a)(6), and complying with the licensure reporting requirements under section 503(e), as amended by the Drug Supply Chain Security Act;

"(C) in the case of a third-party logistics provider, having a valid license under State law or section 584(a)(1), in accordance with section 582(a)(7), and complying with the licensure reporting requirements under section 584(b); and

"(D) in the case of a dispenser, having a valid license under State law.

"(3) DISPENSER.—The term 'dispenser'—

"(A) means a retail pharmacy, hospital pharmacy, a group of chain pharmacies under common ownership and control that do not act as a wholesale distributor, or any other person authorized by law to dispense or administer prescription drugs, and the affiliated warehouses or distribution centers of such entities under common ownership and control that do not act as a wholesale distributor; and

"(B) does not include a person who dispenses only products to be used in animals in accordance with section 512(a)(5).

"(4) DISPOSITION.—The term 'disposition', with respect to a product within the possession or control of an entity, means the removal of such product from the pharmaceutical distribution supply chain, which may include disposal or return of the product for disposal or other appropriate handling and other actions, such as retaining a sample of the product for further additional physical examination or laboratory analysis

of the product by a manufacturer or regulatory or law enforcement agency.

"(5) DISTRIBUTE OR DISTRIBUTION.—The term 'distribute' or 'distribution' means the sale, purchase, trade, delivery, handling, storage, or receipt of a product, and does not include the dispensing of a product pursuant to a prescription executed in accordance with section 503(b)(1) or the dispensing of a product approved under section 512(b).

"(6) EXCLUSIVE DISTRIBUTOR.—The term 'exclusive distributor' means the wholesale distributor that directly purchased the product from the manufacturer and is the sole distributor of that manufacturer's product to a subsequent repackager, wholesale distributor, or dispenser.

"(7) HOMOGENEOUS CASE.—The term 'homogeneous case' means a sealed case containing only product that has a single National Drug Code number belonging to a single lot.

"(8) ILLEGITIMATE PRODUCT.—The term 'illegitimate product' means a product for which credible evidence shows that the product—

"(A) is counterfeit, diverted, or stolen;

"(B) is intentionally adulterated such that the product would result in serious adverse health consequences or death to humans;

"(C) is the subject of a fraudulent transaction; or

"(D) appears otherwise unfit for distribution such that the product would be reasonably likely to result in serious adverse health consequences or death to humans.

"(9) LICENSED.—The term 'licensed' means—

"(A) in the case of a wholesale distributor, having a valid license in accordance with section 503(e) or section 582(a)(6), as applicable;

"(B) in the case of a third-party logistics provider, having a valid license in accordance with section 584(a) or section 582(a)(7), as applicable; and

"(C) in the case of a dispenser, having a valid license under State law.

"(10) MANUFACTURER.—The term 'manufacturer' means, with respect to a product—

"(A) a person that holds an application approved under section 505 or a license issued under section 351 of the Public Health Service Act for such product, or if such product is not the subject of an approved application or license, the person who manufactured the product;

"(B) a co-licensed partner of the person described in subparagraph (A) that obtains the product directly from a person described in this subparagraph or subparagraph (A) or (C); or

"(C) an affiliate of a person described in subparagraph (A) or (B) that receives the product directly from a person described in this subparagraph or subparagraph (A) or (B).

"(11) PACKAGE.—

"(A) IN GENERAL.—The term 'package' means the smallest individual saleable unit of product for distribution by a manufacturer or repackager that is intended by the manufacturer for ultimate sale to the dispenser of such product.

"(B) INDIVIDUAL SALEABLE UNIT.—For purposes of this paragraph, an 'individual saleable unit' is the smallest container of product introduced into commerce by the manufacturer or repackager that is intended by the manufacturer or repackager for individual sale to a dispenser.

"(12) PRESCRIPTION DRUG.—The term 'prescription drug' means a drug for human use subject to section 503(b)(1).

"(13) PRODUCT.—The term 'product' means a prescription drug in a finished dosage form for administration to a patient without substantial further manufacturing (such as capsules, tablets, and lyophilized products before reconstitution), but for purposes of section 582, does not include blood or blood components intended for transfusion, radioactive drugs or radioactive biological products (as defined in section 600.3(ee) of title 21, Code of Federal Regulations) that are regulated by the Nuclear Regulatory Commission or by a State pursuant to an agreement with such Commission under section 274 of the Atomic Energy Act of 1954 (42 U.S.C. 2021), imaging drugs, an intravenous product described in clause (xiv), (xv), or (xvi) of paragraph (24)(B), any medical gas (as defined in section 575), homeopathic drugs marketed in accordance with applicable guidance under this Act, or a drug compounded in compliance with section 503A or 503B.

"(14) PRODUCT IDENTIFIER.—The term 'product identifier' means a standardized graphic that includes, in both human-readable form and on a machine-readable data carrier that conforms to the standards developed by a widely recognized international standards development organization, the standardized numerical identifier, lot number, and expiration date of the product.

"(15) QUARANTINE.—The term 'quarantine' means the storage or identification of a product, to prevent distribution or transfer of the product, in a physically separate area clearly identified for such use or through other procedures.

"(16) REPACKAGER.—The term 'repackager' means a person who owns or operates an establishment that repacks and relabels a product or package for—

"(A) further sale; or

"(B) distribution without a further transaction.

"(17) RETURN.—The term 'return' means providing product to the authorized immediate trading partner from which such product was purchased or received, or to a returns processor or reverse logistics provider for handling of such product.

"(18) RETURNS PROCESSOR OR REVERSE LOGISTICS PROVIDER.—The term 'returns processor' or 'reverse logistics provider' means a person who owns or operates an establishment that dispositions or otherwise processes saleable or nonsaleable product received from an authorized trading partner such that the product may be processed for credit to the purchaser, manufacturer, or seller or disposed of for no further distribution.

"(19) SPECIFIC PATIENT NEED.—The term 'specific patient need' refers to the transfer of a product from one pharmacy to another to fill a prescription for an identified patient. Such term does not include the transfer of a product from one pharmacy to another for the purpose of increasing or replenishing stock in anticipation of a potential need.

"(20) STANDARDIZED NUMERICAL IDENTIFIER.—The term 'standardized numerical identifier' means a set of numbers or characters used to uniquely identify each package or homogenous case that is composed of the National Drug Code that corresponds to the specific product (including the particular package configuration) combined with a unique alphanumeric serial number of up to 20 characters.

"(21) SUSPECT PRODUCT.—The term 'suspect product' means a product for which there is reason to believe that such product—

"(A) is potentially counterfeit, diverted, or stolen;

"(B) is potentially intentionally adulterated such that the product would result in serious adverse health consequences or death to humans;

"(C) is potentially the subject of a fraudulent transaction; or

"(D) appears otherwise unfit for distribution such that the product would result in serious adverse health consequences or death to humans.

"(22) THIRD-PARTY LOGISTICS PROVIDER.—The term 'third-party logistics provider' means an entity that provides or coordinates warehousing, or other logistics services of a product in interstate commerce on behalf of a manufacturer, wholesale distributor, or dispenser of a product, but does not take ownership of the product, nor have responsibility to direct the sale or disposition of the product.

"(23) TRADING PARTNER.—The term 'trading partner' means—

"(A) a manufacturer, repackager, wholesale distributor, or dispenser from whom a manufacturer, repackager, wholesale distributor, or dispenser accepts direct ownership of a product or to whom a manufacturer, repackager, wholesale distributor, or dispenser transfers direct ownership of a product; or

"(B) a third-party logistics provider from whom a manufacturer, repackager, wholesale distributor, or dispenser accepts direct possession of a product or to whom a manufacturer, repackager, wholesale distributor, or dispenser transfers direct possession of a product.

"(24) TRANSACTION.—

"(A) IN GENERAL.—The term 'transaction' means the transfer of product between persons in which a change of ownership occurs.

"(B) EXEMPTIONS.—The term 'transaction' does not include—

"(i) intracompany distribution of any product between members of an affiliate or within a manufacturer;

"(ii) the distribution of a product among hospitals or other health care entities that are under common control;

"(iii) the distribution of a product for emergency medical reasons including a public health emergency declaration pursuant to section 319 of the Public Health Service Act, except that a drug shortage not caused by a public health emergency shall not constitute an emergency medical reason;

"(iv) the dispensing of a product pursuant to a prescription executed in accordance with section 503(b)(1);

"(v) the distribution of product samples by a manufacturer or a licensed wholesale distributor in accordance with section 503(d);

"(vi) the distribution of blood or blood components intended for transfusion;

"(vii) the distribution of minimal quantities of product by a licensed retail pharmacy to a licensed practitioner for office use;

"(viii) the sale, purchase, or trade of a drug or an offer to sell, purchase, or trade a drug by a charitable organization described in section 501(c)(3) of the Internal Revenue Code of 1986 to a nonprofit affiliate of the organization to the extent otherwise permitted by law;

"(ix) the distribution of a product pursuant to the sale or merger of a pharmacy or pharmacies or a wholesale distributor or wholesale distributors, except that any records required to be maintained for the product shall be transferred to the new owner of the pharmacy or pharmacies or wholesale distributor or wholesale distributors;

"(x) the dispensing of a product approved under section 512(c);

"(xi) products transferred to or from any facility that is licensed by the Nuclear Regulatory Commission or by a State pursuant to an agreement with such Commission under section 274 of the Atomic Energy Act of 1954 (42 U.S.C. 2021);

"(xii) a combination product that is not subject to approval under section 505 or licensure under section 351 of the Public Health Service Act, and that is—

"(I) a product comprised of a device and 1 or more other regulated components (such as a drug/device, biologic/device, or drug/device/biologic) that are physically, chemically, or otherwise combined or mixed and produced as a single entity;

"(II) 2 or more separate products packaged together in a single package or as a unit and comprised of a drug and device or device and biological product; or

"(III) 2 or more finished medical devices plus one or more drug or biological products that are packaged together in what is referred to as a 'medical convenience kit' as described in clause (xiii);

"(xiii) the distribution of a collection of finished medical devices, which may include a product or biological product, assembled in kit form strictly for the convenience of the purchaser or user (referred to in this clause as a 'medical convenience kit') if—

"(I) the medical convenience kit is assembled in an establishment that is registered with the Food and Drug Administration as a device manufacturer in accordance with section 510(b)(2);

"(II) the medical convenience kit does not contain a controlled substance that appears in a schedule contained in the Comprehensive Drug Abuse Prevention and Control Act of 1970;

"(III) in the case of a medical convenience kit that includes a product, the person that manufacturers the kit—

"(aa) purchased such product directly from the pharmaceutical manufacturer or from a wholesale distributor that purchased the product directly from the pharmaceutical manufacturer; and

"(bb) does not alter the primary container or label of the product as purchased from the manufacturer or wholesale distributor; and

"(IV) in the case of a medical convenience kit that includes a product, the product is—

"(aa) an intravenous solution intended for the replenishment of fluids and electrolytes;

"(bb) a product intended to maintain the equilibrium of water and minerals in the body;

"(cc) a product intended for irrigation or reconstitution;

"(dd) an anesthetic;

"(ee) an anticoagulant;

"(ff) a vasopressor; or

"(gg) a sympathomimetic;

"(xiv) the distribution of an intravenous product that, by its formulation, is intended for the replenishment of fluids and electrolytes (such as sodium, chloride, and potassium) or calories (such as dextrose and amino acids);

"(xv) the distribution of an intravenous product used to maintain the equilibrium of water and minerals in the body, such as dialysis solutions;

"(xvi) the distribution of a product that is intended for irrigation, or sterile water, whether intended for such purposes or for injection;

"(xvii) the distribution of a medical gas (as defined in section 575); or

"(xviii) the distribution or sale of any licensed product under section 351 of the Public Health Service Act that meets the definition of a device under section 201(h).

"(25) TRANSACTION HISTORY.—The term 'transaction history' means a statement in paper or electronic form, including the transaction information for each prior transaction going back to the manufacturer of the product.

"(26) TRANSACTION INFORMATION.—The term 'transaction information' means—

"(A) the proprietary or established name or names of the product;

"(B) the strength and dosage form of the product;

"(C) the National Drug Code number of the product;

"(D) the container size;

"(E) the number of containers;

"(F) the lot number of the product;

"(G) the date of the transaction;

"(H) the date of the shipment, if more than 24 hours after the date of the transaction;

"(I) the business name and address of the person from whom ownership is being transferred; and

"(J) the business name and address of the person to whom ownership is being transferred.

"(27) TRANSACTION STATEMENT.—The 'transaction statement' is a statement, in paper or electronic form, that the entity transferring ownership in a transaction—

"(A) is authorized as required under the Drug Supply Chain Security Act;

"(B) received the product from a person that is authorized as required under the Drug Supply Chain Security Act;

"(C) received transaction information and a transaction statement from the prior owner of the product, as required under section 582;

"(D) did not knowingly ship a suspect or illegitimate product;

"(E) had systems and processes in place to comply with verification requirements under section 582;

"(F) did not knowingly provide false transaction information; and

"(G) did not knowingly alter the transaction history.

"(28) VERIFICATION OR VERIFY.—The term 'verification' or 'verify' means determining whether the product identifier affixed to, or imprinted upon, a package or homogeneous case corresponds to the standardized numerical identifier or lot number and expiration date assigned to the product by the manufacturer or the repackager, as applicable in accordance with section 582.

"(29) WHOLESALE DISTRIBUTOR.—The term 'wholesale distributor' means a person (other than a manufacturer, a manufacturer's co-licensed partner, a third-party logistics provider, or repackager) engaged in wholesale distribution (as defined in section 503(e)(4), as amended by the Drug Supply Chain Security Act).

"SEC. 582. REQUIREMENTS.

"(a) IN GENERAL.—

"(1) OTHER ACTIVITIES.—Each manufacturer, repackager, wholesale distributor, and dispenser shall comply with the requirements set forth in this section with respect to the role of such manufacturer, repackager, wholesale distributor, or dispenser in a transaction involving product. If an entity meets the definition of more than one of the entities listed in the preceding sentence, such entity shall comply with all applicable requirements in this section, but shall not be required to duplicate requirements.

"(2) INITIAL STANDARDS.—

"(A) IN GENERAL.—The Secretary shall, in consultation with other appropriate Federal officials, manufacturers, repackagers, wholesale distributors, dispensers, and other pharmaceutical distribution supply chain stakeholders, issue a draft guidance document that establishes standards for the interoperable exchange of transaction information,

transaction history, and transaction statements, in paper or electronic format, for compliance with this subsection and subsections (b), (c), (d), and (e). In establishing such standards, the Secretary shall consider the feasibility of establishing standardized documentation to be used by members of the pharmaceutical distribution supply chain to convey the transaction information, transaction history, and transaction statement to the subsequent purchaser of a product and to facilitate the exchange of lot level data. The standards established under this paragraph shall take into consideration the standards established under section 505D and shall comply with a form and format developed by a widely recognized international standards development organization.

"(B) PUBLIC INPUT.—Prior to issuing the draft guidance under subparagraph (A), the Secretary shall gather comments and information from stakeholders and maintain such comments and information in a public docket for at least 60 days prior to issuing such guidance.

"(C) PUBLICATION.—The Secretary shall publish the standards established under subparagraph (A) not later than 1 year after the date of enactment of the Drug Supply Chain Security Act.

"(3) WAIVERS, EXCEPTIONS, AND EXEMPTIONS.—

"(A) IN GENERAL.—Not later than 2 years after the date of enactment of the Drug Supply Chain Security Act, the Secretary shall, by guidance—

"(i) establish a process by which an authorized manufacturer, repackager, wholesale distributor, or dispenser may request a waiver from any of the requirements set forth in this section, which the Secretary may grant if the Secretary determines that such requirements would result in an undue economic hardship or for emergency medical reasons, including a public health emergency declaration pursuant to section 319 of the Public Health Service Act;

"(ii) establish a process by which the Secretary determines exceptions, and a process through which a manufacturer or repackager may request such an exception, to the requirements relating to product identifiers if a product is packaged in a container too small or otherwise unable to accommodate a label with sufficient space to bear the information required for compliance with this section; and

"(iii) establish a process by which the Secretary may determine other products or transactions that shall be exempt from the requirements of this section.

"(B) CONTENT.—The guidance issued under subparagraph (A) shall include a process for the biennial review and renewal of such waivers, exceptions, and exemptions, as applicable.

"(C) PROCESS.—In issuing the guidance under this paragraph, the Secretary shall provide an effective date that is not later than 180 days prior to the date on which manufacturers are required to affix or imprint a product identifier to each package and homogenous case of product

intended to be introduced in a transaction into commerce consistent with this section.

"(4) SELF-EXECUTING REQUIREMENTS.—Except where otherwise specified, the requirements of this section may be enforced without further regulations or guidance from the Secretary.

"(5) GRANDFATHERING PRODUCT.—

"(A) PRODUCT IDENTIFIER.—Not later than 2 years after the date of enactment of the Drug Supply Chain Security Act, the Secretary shall finalize guidance specifying whether and under what circumstances product that is not labeled with a product identifier and that is in the pharmaceutical distribution supply chain at the time of the effective date of the requirements of this section shall be exempted from the requirements of this section.

"(B) TRACING.—For a product that entered the pharmaceutical distribution supply chain prior to January 1, 2015—

"(i) authorized trading partners shall be exempt from providing transaction information as required under subsections (b)(1)(A)(i), (c)(1)(A)(ii), (d)(1)(A)(ii), and (e)(1)(A)(ii);

"(ii) transaction history required under this section shall begin with the owner of such product on such date; and

"(iii) the owners of such product on such date shall be exempt from asserting receipt of transaction information and transaction statement from the prior owner as required under this section.

"(6) WHOLESALE DISTRIBUTOR LICENSES.—Notwithstanding section 581(9)(A), until the effective date of the wholesale distributor licensing regulations under section 583, the term 'licensed' or 'authorized', as it relates to a wholesale distributor with respect to prescription drugs, shall mean a wholesale distributor with a valid license under State law.

"(7) THIRD-PARTY LOGISTICS PROVIDER LICENSES.—Until the effective date of the third-party logistics provider licensing regulations under section 584, a third-party logistics provider shall be considered 'licensed' under section 581(9)(B) unless the Secretary has made a finding that the third-party logistics provider does not utilize good handling and distribution practices and publishes notice thereof.

"(8) LABEL CHANGES.—Changes made to package labels solely to incorporate the product identifier may be submitted to the Secretary in the annual report of an establishment, in accordance with section 314.70(d) of chapter 21, Code of Federal Regulations (or any successor regulation).

"(9) PRODUCT IDENTIFIERS.—With respect to any requirement relating to product identifiers under this subchapter—

"(A) unless the Secretary allows, through guidance, the use of other technologies for data instead of or in addition to the technologies described in clauses (i) and (ii), the applicable data—

"(i) shall be included in a 2-dimensional data matrix barcode when affixed to, or imprinted upon, a package; and

"(ii) shall be included in a linear or 2-dimensional data matrix barcode when affixed to, or imprinted upon, a homogeneous case; and

"(B) verification of the product identifier may occur by using human-readable or machine-readable methods.

"(b) MANUFACTURER REQUIREMENTS.—

"(1) PRODUCT TRACING.—

"(A) IN GENERAL.—Beginning not later than January 1, 2015, a manufacturer shall—

"(i) prior to, or at the time of, each transaction in which such manufacturer transfers ownership of a product, provide the subsequent owner with transaction history, transaction information, and a transaction statement, in a single document in an paper or electronic format; and

"(ii) capture the transaction information (including lot level information), transaction history, and transaction statement for each transaction and maintain such information, history, and statement for not less than 6 years after the date of the transaction.

"(B) REQUESTS FOR INFORMATION.—Upon a request by the Secretary or other appropriate Federal or State official, in the event of a recall or for the purpose of investigating a suspect product or an illegitimate product, a manufacturer shall, not later than 1 business day, and not to exceed 48 hours, after receiving the request, or in other such reasonable time as determined by the Secretary, based on the circumstances of the request, provide the applicable transaction information, transaction history, and transaction statement for the product.

"(C) ELECTRONIC FORMAT.—

"(i) IN GENERAL.—Beginning not later than 4 years after the date of enactment of the Drug Supply Chain Security Act, except as provided under clause (ii), a manufacturer shall provide the transaction information, transaction history, and transaction statement required under subparagraph (A)(i) in electronic format.

"(ii) EXCEPTION.—A manufacturer may continue to provide the transaction information, transaction history, and transaction statement required under subparagraph (A)(i) in a paper format to a licensed health care practitioner authorized to prescribe medication under State law or other licensed individual under the supervision or direction of such a practitioner who dispenses product in the usual course of professional practice.

"(2) PRODUCT IDENTIFIER.—

"(A) IN GENERAL.—Beginning not later than 4 years after the date of enactment of the Drug Supply Chain Security Act, a manufacturer shall affix or imprint a product identifier to each package and homogenous case of a product intended to be introduced in a transaction into commerce. Such manufacturer shall maintain the product identifier information for such product for not less than 6 years after the date of the transaction.

"(B) EXCEPTION.—A package that is required to have a standardized numerical identifier is not required to have a unique device identifier.

"(3) AUTHORIZED TRADING PARTNERS.—Beginning not later than January 1, 2015, the trading partners of a manufacturer may be only authorized trading partners.

"(4) VERIFICATION.—Beginning not later than January 1, 2015, a manufacturer shall have systems in place to enable the manufacturer to comply with the following requirements:

"(A) SUSPECT PRODUCT.—

"(i) IN GENERAL.—Upon making a determination that a product in the possession or control of the manufacturer is a suspect product, or upon receiving a request for verification from the Secretary that has made a determination that a product within the possession or control of a manufacturer is a suspect product, a manufacturer shall—

"(I) quarantine such product within the possession or control of the manufacturer from product intended for distribution until such product is cleared or dispositioned; and

"(II) promptly conduct an investigation in coordination with trading partners, as applicable, to determine whether the product is an illegitimate product, which shall include validating any applicable transaction history and transaction information in the possession of the manufacturer and otherwise investigating to determine whether the product is an illegitimate product, and, beginning 4 years after the date of enactment of the Drug Supply Chain Security Act, verifying the product at the package level, including the standardized numerical identifier.

"(ii) CLEARED PRODUCT.—If the manufacturer makes the determination that a suspect product is not an illegitimate product, the manufacturer shall promptly notify the Secretary, if applicable, of such determination and such product may be further distributed.

"(iii) RECORDS.—A manufacturer shall keep records of the investigation of a suspect product for not less than 6 years after the conclusion of the investigation.

"(B) ILLEGITIMATE PRODUCT.—

"(i) IN GENERAL.—Upon determining that a product in the possession or control of a manufacturer is an illegitimate product, the manufacturer shall, in a manner consistent with the systems and processes of such manufacturer—

"(I) quarantine such product within the possession or control of the manufacturer from product intended for distribution until such product is dispositioned;

"(II) disposition the illegitimate product within the possession or control of the manufacturer;

"(III) take reasonable and appropriate steps to assist a trading partner to disposition an illegitimate product not in the possession or control of the manufacturer; and

"(IV) retain a sample of the product for further physical examination or laboratory analysis of the product by the manufacturer or Secretary (or other appropriate Federal or State official) upon request by the Secretary (or other appropriate Federal or State official), as necessary and appropriate.

"(ii) MAKING A NOTIFICATION.—

"(I) ILLEGITIMATE PRODUCT.—Upon determining that a product in the possession or control of the manufacturer is an illegitimate product, the manufacturer shall notify the Secretary and all immediate trading partners that the manufacturer has reason to believe may have received such illegitimate product of such determination not later than 24 hours after making such determination.

"(II) HIGH RISK OF ILLEGITIMACY.—A manufacturer shall notify the Secretary and immediate trading partners that the manufacturer has reason to believe may have in the trading partner's possession a product manufactured by, or purported to be a product manufactured by, the manufacturer not later than 24 hours after determining or being notified by the Secretary or a trading partner that there is a high risk that such product is an illegitimate product. For purposes of this subclause, a 'high risk' may include a specific high risk that could increase the likelihood that illegitimate product will enter the pharmaceutical distribution supply chain and other high risks as determined by the Secretary in guidance pursuant to subsection (h).

"(iii) RESPONDING TO A NOTIFICATION.—Upon the receipt of a notification from the Secretary or a trading partner that a determination has been made that a product is an illegitimate product, a manufacturer shall identify all illegitimate product subject to such notification that is in the possession or control of the manufacturer, including any product that is subsequently received, and shall perform the activities described in subparagraph (A).

"(iv) TERMINATING A NOTIFICATION.—Upon making a determination, in consultation with the Secretary, that a notification is no longer necessary, a manufacturer shall promptly notify immediate trading partners that the manufacturer notified pursuant to clause (ii) that such notification has been terminated.

"(v) RECORDS.—A manufacturer shall keep records of the disposition of an illegitimate product for not less than 6 years after the conclusion of the disposition.

"(C) REQUESTS FOR VERIFICATION.—Beginning 4 years after the date of enactment of the Drug Supply Chain Security Act, upon receiving a request for verification from

an authorized repackager, wholesale distributor, or dispenser that is in possession or control of a product such person believes to be manufactured by such manufacturer, a manufacturer shall, not later than 24 hours after receiving the request for verification or in other such reasonable time as determined by the Secretary, based on the circumstances of the request, notify the person making the request whether the product identifier, including the standardized numerical identifier, that is the subject of the request corresponds to the product identifier affixed or imprinted by the manufacturer. If a manufacturer responding to a request for verification identifies a product identifier that does not correspond to that affixed or imprinted by the manufacturer, the manufacturer shall treat such product as suspect product and conduct an investigation as described in subparagraph (A). If the manufacturer has reason to believe the product is an illegitimate product, the manufacturer shall advise the person making the request of such belief at the time such manufacturer responds to the request for verification.

"(D) ELECTRONIC DATABASE.—A manufacturer may satisfy the requirements of this paragraph by developing a secure electronic database or utilizing a secure electronic database developed or operated by another entity. The owner of such database shall establish the requirements and processes to respond to requests and may provide for data access to other members of the pharmaceutical distribution supply chain, as appropriate. The development and operation of such a database shall not relieve a manufacturer of the requirement under this paragraph to respond to a request for verification submitted by means other than a secure electronic database.

"(E) SALEABLE RETURNED PRODUCT.—Beginning 4 years after the date of enactment of the Drug Supply Chain Security Act (except as provided pursuant to subsection (a)(5)), upon receipt of a returned product that the manufacturer intends to further distribute, before further distributing such product, the manufacturer shall verify the product identifier, including the standardized numerical identifier, for each sealed homogeneous case of such product or, if such product is not in a sealed homogeneous case, verify the product identifier, including the standardized numerical identifier, on each package.

"(F) NONSALEABLE RETURNED PRODUCT.—A manufacturer may return a nonsaleable product to the manufacturer or repackager, to the wholesale distributor from whom such product was purchased, or to a person acting on behalf of such a person, including a returns processor, without providing the information described in paragraph (1)(A)(i).

"(c) WHOLESALE DISTRIBUTOR REQUIREMENTS.—

"(1) PRODUCT TRACING.—

"(A) IN GENERAL.—Beginning not later than January 1, 2015, the following requirements shall apply to wholesale distributors:

"(i) A wholesale distributor shall not accept ownership of a product unless the previous owner prior to,

or at the time of, the transaction provides the transaction history, transaction information, and a transaction statement for the product, as applicable under this subparagraph.

"(ii)(I)(aa) If the wholesale distributor purchased a product directly from the manufacturer, the exclusive distributor of the manufacturer, or a repackager that purchased directly from the manufacturer, then prior to, or at the time of, each transaction in which the wholesale distributor transfers ownership of a product, the wholesale distributor shall provide to the subsequent purchaser—

"(AA) a transaction statement, which shall state that such wholesale distributor, or a member of the affiliate of such wholesale distributor, purchased the product directly from the manufacturer, exclusive distributor of the manufacturer, or repackager that purchased the product directly from the manufacturer; and

"(BB) subject to subclause (II), the transaction history and transaction information.

"(bb) The wholesale distributor shall provide the transaction history, transaction information, and transaction statement under item (aa)—

"(AA) if provided to a dispenser, on a single document in a paper or electronic format; and

"(BB) if provided to a wholesale distributor, through any combination of self-generated paper, electronic data, or manufacturer-provided information on the product package.

"(II) For purposes of transactions described in subclause (I), transaction history and transaction information shall not be required to include the lot number of the product, the initial transaction date, or the initial shipment date from the manufacturer (as defined in subparagraphs (F), (G), and (H) of section 581(26)).

"(iii) If the wholesale distributor did not purchase a product directly from the manufacturer, the exclusive distributor of the manufacturer, or a repackager that purchased directly from the manufacturer, as described in clause (ii), then prior to, or at the time of, each transaction or subsequent transaction, the wholesale distributor shall provide to the subsequent purchaser a transaction statement, transaction history, and transaction information, in a paper or electronic format that complies with the guidance document issued under subsection (a)(2).

"(iv) For the purposes of clause (iii), the transaction history supplied shall begin only with the wholesale distributor described in clause (ii)(I), but the wholesale distributor described in clause (iii) shall inform the subsequent purchaser that such wholesale distributor received a direct purchase statement from a wholesale distributor described in clause (ii)(I).

"(v) A wholesale distributor shall—

"(I) capture the transaction information (including lot level information) consistent with the requirements of this section, transaction history, and transaction statement for each transaction described in clauses (i), (ii), and (iii) and maintain such information, history, and statement for not less than 6 years after the date of the transaction; and

"(II) maintain the confidentiality of the transaction information (including any lot level information consistent with the requirements of this section), transaction history, and transaction statement for a product in a manner that prohibits disclosure to any person other than the Secretary or other appropriate Federal or State official, except to comply with clauses (ii) and (iii), and, as applicable, pursuant to an agreement under subparagraph (D).

"(B) RETURNS.—

"(i) SALEABLE RETURNS.—Notwithstanding subparagraph (A)(i), the following shall apply:

"(I) REQUIREMENTS.—Until the date that is 6 years after the date of enactment of the Drug Supply Chain Security Act (except as provided pursuant to subsection (a)(5)), a wholesale distributor may accept returned product from a dispenser or repackager pursuant to the terms and conditions of any agreement between the parties, and, notwithstanding subparagraph (A)(ii), may distribute such returned product without providing the transaction history. For transactions subsequent to the return, the transaction history of such product shall begin with the wholesale distributor that accepted the returned product, consistent with the requirements of this subsection.

"(II) ENHANCED REQUIREMENTS.—Beginning 6 years after the date of enactment of the Drug Supply Chain Security Act (except as provided pursuant to subsection (a)(5)), a wholesale distributor may accept returned product from a dispenser or repackager only if the wholesale distributor can associate returned product with the transaction information and transaction statement associated with that product. For all transactions after such date, the transaction history, as applicable, of such product shall begin with the wholesale distributor that accepted and verified the returned product. For purposes of this subparagraph, the transaction information and transaction history, as applicable, need not include transaction dates if it is not reasonably practicable to obtain such dates.

"(ii) NONSALEABLE RETURNS.—A wholesale distributor may return a nonsaleable product to the manufacturer or repackager, to the wholesale distributor from whom such product was purchased, or to a person acting on behalf of such a person, including a returns

processor, without providing the information required under subparagraph (A)(i).

"(C) REQUESTS FOR INFORMATION.—Upon a request by the Secretary or other appropriate Federal or State official, in the event of a recall or for the purpose of investigating a suspect product or an illegitimate product, a wholesale distributor shall, not later than 1 business day, and not to exceed 48 hours, after receiving the request or in other such reasonable time as determined by the Secretary, based on the circumstances of the request, provide the applicable transaction information, transaction history, and transaction statement for the product.

"(D) TRADING PARTNER AGREEMENTS.—Beginning 6 years after the date of enactment of the Drug Supply Chain Security Act, a wholesale distributor may disclose the transaction information, including lot level information, transaction history, or transaction statement of a product to the subsequent purchaser of the product, pursuant to a written agreement between such wholesale distributor and such subsequent purchaser. Nothing in this subparagraph shall be construed to limit the applicability of subparagraphs (A) through (C).

"(2) PRODUCT IDENTIFIER.—Beginning 6 years after the date of enactment of the Drug Supply Chain Security Act, a wholesale distributor may engage in transactions involving a product only if such product is encoded with a product identifier (except as provided pursuant to subsection (a)(5)).

"(3) AUTHORIZED TRADING PARTNERS.—Beginning not later than January 1, 2015, the trading partners of a wholesale distributor may be only authorized trading partners.

"(4) VERIFICATION.—Beginning not later than January 1, 2015, a wholesale distributor shall have systems in place to enable the wholesale distributor to comply with the following requirements:

"(A) SUSPECT PRODUCT.—

"(i) IN GENERAL.—Upon making a determination that a product in the possession or control of a wholesale distributor is a suspect product, or upon receiving a request for verification from the Secretary that has made a determination that a product within the possession or control of a wholesale distributor is a suspect product, a wholesale distributor shall—

"(I) quarantine such product within the possession or control of the wholesale distributor from product intended for distribution until such product is cleared or dispositioned; and

"(II) promptly conduct an investigation in coordination with trading partners, as applicable, to determine whether the product is an illegitimate product, which shall include validating any applicable transaction history and transaction information in the possession of the wholesale distributor and otherwise investigating to determine whether the product is an illegitimate product, and, beginning 6 years after the date of enactment of the Drug Supply Chain Security Act (except as provided pursuant to subsection (a)(5)),

verifying the product at the package level, including the standardized numerical identifier.

"(ii) CLEARED PRODUCT.—If the wholesale distributor determines that a suspect product is not an illegitimate product, the wholesale distributor shall promptly notify the Secretary, if applicable, of such determination and such product may be further distributed.

"(iii) RECORDS.—A wholesale distributor shall keep records of the investigation of a suspect product for not less than 6 years after the conclusion of the investigation.

"(B) ILLEGITIMATE PRODUCT.—

"(i) IN GENERAL.—Upon determining, in coordination with the manufacturer, that a product in the possession or control of a wholesale distributor is an illegitimate product, the wholesale distributor shall, in a manner that is consistent with the systems and processes of such wholesale distributor—

"(I) quarantine such product within the possession or control of the wholesale distributor from product intended for distribution until such product is dispositioned;

"(II) disposition the illegitimate product within the possession or control of the wholesale distributor;

"(III) take reasonable and appropriate steps to assist a trading partner to disposition an illegitimate product not in the possession or control of the wholesale distributor; and

"(IV) retain a sample of the product for further physical examination or laboratory analysis of the product by the manufacturer or Secretary (or other appropriate Federal or State official) upon request by the manufacturer or Secretary (or other appropriate Federal or State official), as necessary and appropriate.

"(ii) MAKING A NOTIFICATION.—Upon determining that a product in the possession or control of the wholesale distributor is an illegitimate product, the wholesale distributor shall notify the Secretary and all immediate trading partners that the wholesale distributor has reason to believe may have received such illegitimate product of such determination not later than 24 hours after making such determination.

"(iii) RESPONDING TO A NOTIFICATION.—Upon the receipt of a notification from the Secretary or a trading partner that a determination has been made that a product is an illegitimate product, a wholesale distributor shall identify all illegitimate product subject to such notification that is in the possession or control of the wholesale distributor, including any product that is subsequently received, and shall perform the activities described in subparagraph (A).

"(iv) TERMINATING A NOTIFICATION.—Upon making a determination, in consultation with the Secretary, that a notification is no longer necessary, a wholesale

distributor shall promptly notify immediate trading partners that the wholesale distributor notified pursuant to clause (ii) that such notification has been terminated.

"(v) RECORDS.—A wholesale distributor shall keep records of the disposition of an illegitimate product for not less than 6 years after the conclusion of the disposition.

"(C) ELECTRONIC DATABASE.—A wholesale distributor may satisfy the requirements of this paragraph by developing a secure electronic database or utilizing a secure electronic database developed or operated by another entity. The owner of such database shall establish the requirements and processes to respond to requests and may provide for data access to other members of the pharmaceutical distribution supply chain, as appropriate. The development and operation of such a database shall not relieve a wholesale distributor of the requirement under this paragraph to respond to a verification request submitted by means other than a secure electronic database.

"(D) VERIFICATION OF SALEABLE RETURNED PRODUCT.—Beginning 6 years after the date of enactment of the Drug Supply Chain Security Act, upon receipt of a returned product that the wholesale distributor intends to further distribute, before further distributing such product, the wholesale distributor shall verify the product identifier, including the standardized numerical identifier, for each sealed homogeneous case of such product or, if such product is not in a sealed homogeneous case, verify the product identifier, including the standardized numerical identifier, on each package.

"(d) DISPENSER REQUIREMENTS.—

"(1) PRODUCT TRACING.—

"(A) IN GENERAL.—Beginning July 1, 2015, a dispenser—

"(i) shall not accept ownership of a product, unless the previous owner prior to, or at the time of, the transaction, provides transaction history, transaction information, and a transaction statement;

"(ii) prior to, or at the time of, each transaction in which the dispenser transfers ownership of a product (but not including dispensing to a patient or returns) shall provide the subsequent owner with transaction history, transaction information, and a transaction statement for the product, except that the requirements of this clause shall not apply to sales by a dispenser to another dispenser to fulfill a specific patient need; and

"(iii) shall capture transaction information (including lot level information, if provided), transaction history, and transaction statements, as necessary to investigate a suspect product, and maintain such information, history, and statements for not less than 6 years after the transaction.

"(B) AGREEMENTS WITH THIRD PARTIES.—A dispenser may enter into a written agreement with a third party, including an authorized wholesale distributor, under which

the third party confidentially maintains the transaction information, transaction history, and transaction statements required to be maintained under this subsection on behalf of the dispenser. If a dispenser enters into such an agreement, the dispenser shall maintain a copy of the written agreement and shall not be relieved of the obligations of the dispenser under this subsection.

"(C) RETURNS.—

"(i) SALEABLE RETURNS.—A dispenser may return product to the trading partner from which the dispenser obtained the product without providing the information required under subparagraph (A).

"(ii) NONSALEABLE RETURNS.—A dispenser may return a nonsaleable product to the manufacturer or repackager, to the wholesale distributor from whom such product was purchased, to a returns processor, or to a person acting on behalf of such a person without providing the information required under subparagraph (A).

"(D) REQUESTS FOR INFORMATION.—Upon a request by the Secretary or other appropriate Federal or State official, in the event of a recall or for the purpose of investigating a suspect or an illegitimate product, a dispenser shall, not later than 2 business days after receiving the request or in another such reasonable time as determined by the Secretary, based on the circumstances of the request, provide the applicable transaction information, transaction statement, and transaction history which the dispenser received from the previous owner, which shall not include the lot number of the product, the initial transaction date, or the initial shipment date from the manufacturer unless such information was included in the transaction information, transaction statement, and transaction history provided by the manufacturer or wholesale distributor to the dispenser. The dispenser may respond to the request by providing the applicable information in either paper or electronic format. Until the date that is 4 years after the date of enactment of the Drug Supply Chain Security Act, the Secretary or other appropriate Federal or State official shall grant a dispenser additional time, as necessary, only with respect to a request to provide lot level information described in subparagraph (F) of section 581(26) that was provided to the dispenser in paper format, limit the request time period to the 6 months preceding the request or other relevant date, and, in the event of a recall, the Secretary, or other appropriate Federal or State official may request information only if such recall involves a serious adverse health consequence or death to humans.

"(2) PRODUCT IDENTIFIER.—Beginning not later than 7 years after the date of enactment of the Drug Supply Chain Security Act, a dispenser may engage in transactions involving a product only if such product is encoded with a product identifier (except as provided pursuant to subsection (a)(5)).

"(3) AUTHORIZED TRADING PARTNERS.—Beginning not later than January 1, 2015, the trading partners of a dispenser may be only authorized trading partners.

"(4) VERIFICATION.—Beginning not later than January 1, 2015, a dispenser shall have systems in place to enable the dispenser to comply with the following requirements:

"(A) SUSPECT PRODUCT.—

"(i) IN GENERAL.—Upon making a determination that a product in the possession or control of the dispenser is a suspect product, or upon receiving a request for verification from the Secretary that has made a determination that a product within the possession or control of a dispenser is a suspect product, a dispenser shall—

"(I) quarantine such product within the possession or control of the dispenser from product intended for distribution until such product is cleared or dispositioned; and

"(II) promptly conduct an investigation in coordination with trading partners, as applicable, to determine whether the product is an illegitimate product.

"(ii) INVESTIGATION.—An investigation conducted under clause (i)(II) shall include—

"(I) beginning 7 years after the date of enactment of the Drug Supply Chain Security Act, verifying whether the lot number of a suspect product corresponds with the lot number for such product;

"(II) beginning 7 years after the date of enactment of such Act, verifying that the product identifier, including the standardized numerical identifier, of at least 3 packages or 10 percent of such suspect product, whichever is greater, or all packages, if there are fewer than 3, corresponds with the product identifier for such product;

"(III) validating any applicable transaction history and transaction information in the possession of the dispenser; and

"(IV) otherwise investigating to determine whether the product is an illegitimate product.

"(iii) CLEARED PRODUCT.—If the dispenser makes the determination that a suspect product is not an illegitimate product, the dispenser shall promptly notify the Secretary, if applicable, of such determination and such product may be further distributed or dispensed.

"(iv) RECORDS.—A dispenser shall keep records of the investigation of a suspect product for not less than 6 years after the conclusion of the investigation.

"(B) ILLEGITIMATE PRODUCT.—

"(i) IN GENERAL.—Upon determining, in coordination with the manufacturer, that a product in the possession or control of a dispenser is an illegitimate product, the dispenser shall—

"(I) disposition the illegitimate product within the possession or control of the dispenser;

"(II) take reasonable and appropriate steps to assist a trading partner to disposition an illegitimate product not in the possession or control of the dispenser; and

"(III) retain a sample of the product for further physical examination or laboratory analysis of the product by the manufacturer or Secretary (or other appropriate Federal or State official) upon request by the manufacturer or Secretary (or other appropriate Federal or State official), as necessary and appropriate.

"(ii) MAKING A NOTIFICATION.—Upon determining that a product in the possession or control of the dispenser is an illegitimate product, the dispenser shall notify the Secretary and all immediate trading partners that the dispenser has reason to believe may have received such illegitimate product of such determination not later than 24 hours after making such determination.

"(iii) RESPONDING TO A NOTIFICATION.—Upon the receipt of a notification from the Secretary or a trading partner that a determination has been made that a product is an illegitimate product, a dispenser shall identify all illegitimate product subject to such notification that is in the possession or control of the dispenser, including any product that is subsequently received, and shall perform the activities described in subparagraph (A).

"(iv) TERMINATING A NOTIFICATION.—Upon making a determination, in consultation with the Secretary, that a notification is no longer necessary, a dispenser shall promptly notify immediate trading partners that the dispenser notified pursuant to clause (ii) that such notification has been terminated.

"(v) RECORDS.—A dispenser shall keep records of the disposition of an illegitimate product for not less than 6 years after the conclusion of the disposition.

"(C) ELECTRONIC DATABASE.—A dispenser may satisfy the requirements of this paragraph by developing a secure electronic database or utilizing a secure electronic database developed or operated by another entity.

"(5) EXCEPTION.—Notwithstanding any other provision of law, the requirements under paragraphs (1) and (4) shall not apply to licensed health care practitioners authorized to prescribe or administer medication under State law or other licensed individuals under the supervision or direction of such practitioners who dispense or administer product in the usual course of professional practice.

"(e) REPACKAGER REQUIREMENTS.—

"(1) PRODUCT TRACING.—

"(A) IN GENERAL.—Beginning not later than January 1, 2015, a repackager described in section 581(16)(A) shall—

"(i) not accept ownership of a product unless the previous owner, prior to, or at the time of, the transaction, provides transaction history, transaction

information, and a transaction statement for the product;

"(ii) prior to, or at the time of, each transaction in which the repackager transfers ownership of a product, provide the subsequent owner with transaction history, transaction information, and a transaction statement for the product; and

"(iii) capture the transaction information (including lot level information), transaction history, and transaction statement for each transaction described in clauses (i) and (ii) and maintain such information, history, and statement for not less than 6 years after the transaction.

"(B) RETURNS.—

"(i) NONSALEABLE PRODUCT.—A repackager described in section 581(16)(A) may return a nonsaleable product to the manufacturer or repackager, or to the wholesale distributor from whom such product was purchased, or to a person acting on behalf of such a person, including a returns processor, without providing the information required under subparagraph (A)(ii).

"(ii) SALEABLE OR NONSALEABLE PRODUCT.—A repackager described in section 581(16)(B) may return a saleable or nonsaleable product to the manufacturer, repackager, or to the wholesale distributor from whom such product was received without providing the information required under subparagraph (A)(ii) on behalf of the hospital or other health care entity that took ownership of such product pursuant to the terms and conditions of any agreement between such repackager and the entity that owns the product.

"(C) REQUESTS FOR INFORMATION.—Upon a request by the Secretary or other appropriate Federal or State official, in the event of a recall or for the purpose of investigating a suspect product or an illegitimate product, a repackager described in section 581(16)(A) shall, not later than 1 business day, and not to exceed 48 hours, after receiving the request or in other such reasonable time as determined by the Secretary, provide the applicable transaction information, transaction history, and transaction statement for the product.

"(2) PRODUCT IDENTIFIER.—

"(A) IN GENERAL.—Beginning not later than 5 years after the date of enactment of the Drug Supply Chain Security Act, a repackager described in section 581(16)(A)—

"(i) shall affix or imprint a product identifier to each package and homogenous case of product intended to be introduced in a transaction in commerce;

"(ii) shall maintain the product identifier information for such product for not less than 6 years after the date of the transaction;

"(iii) may engage in transactions involving a product only if such product is encoded with a product identifier (except as provided pursuant to subsection (a)(5)); and

"(iv) shall maintain records for not less than 6 years to allow the repackager to associate the product identifier the repackager affixes or imprints with the product identifier assigned by the original manufacturer of the product.

"(B) EXCEPTION.—A package that is required to have a standardized numerical identifier is not required to have a unique device identifier.

"(3) AUTHORIZED TRADING PARTNERS.—Beginning January 1, 2015, the trading partners of a repackager described in section 581(16) may be only authorized trading partners.

"(4) VERIFICATION.—Beginning not later than January 1, 2015, a repackager described in section 581(16)(A) shall have systems in place to enable the repackager to comply with the following requirements:

"(A) SUSPECT PRODUCT.—

"(i) IN GENERAL.—Upon making a determination that a product in the possession or control of the repackager is a suspect product, or upon receiving a request for verification from the Secretary that has made a determination that a product within the possession or control of a repackager is a suspect product, a repackager shall—

"(I) quarantine such product within the possession or control of the repackager from product intended for distribution until such product is cleared or dispositioned; and

"(II) promptly conduct an investigation in coordination with trading partners, as applicable, to determine whether the product is an illegitimate product, which shall include validating any applicable transaction history and transaction information in the possession of the repackager and otherwise investigating to determine whether the product is an illegitimate product, and, beginning 5 years after the date of enactment of the Drug Supply Chain Security Act (except as provided pursuant to subsection (a)(5)), verifying the product at the package level, including the standardized numerical identifier.

"(ii) CLEARED PRODUCT.—If the repackager makes the determination that a suspect product is not an illegitimate product, the repackager shall promptly notify the Secretary, if applicable, of such determination and such product may be further distributed.

"(iii) RECORDS.—A repackager shall keep records of the investigation of a suspect product for not less than 6 years after the conclusion of the investigation.

"(B) ILLEGITIMATE PRODUCT.—

"(i) IN GENERAL.—Upon determining, in coordination with the manufacturer, that a product in the possession or control of a repackager is an illegitimate product, the repackager shall, in a manner that is consistent with the systems and processes of such repackager—

"(I) quarantine such product within the possession or control of the repackager from product

intended for distribution until such product is dispositioned;

"(II) disposition the illegitimate product within the possession or control of the repackager;

"(III) take reasonable and appropriate steps to assist a trading partner to disposition an illegitimate product not in the possession or control of the repackager; and

"(IV) retain a sample of the product for further physical examination or laboratory analysis of the product by the manufacturer or Secretary (or other appropriate Federal or State official) upon request by the manufacturer or Secretary (or other appropriate Federal or State official), as necessary and appropriate.

"(ii) MAKING A NOTIFICATION.—Upon determining that a product in the possession or control of the repackager is an illegitimate product, the repackager shall notify the Secretary and all immediate trading partners that the repackager has reason to believe may have received the illegitimate product of such determination not later than 24 hours after making such determination.

"(iii) RESPONDING TO A NOTIFICATION.—Upon the receipt of a notification from the Secretary or a trading partner, a repackager shall identify all illegitimate product subject to such notification that is in the possession or control of the repackager, including any product that is subsequently received, and shall perform the activities described in subparagraph (A).

"(iv) TERMINATING A NOTIFICATION.—Upon making a determination, in consultation with the Secretary, that a notification is no longer necessary, a repackager shall promptly notify immediate trading partners that the repackager notified pursuant to clause (ii) that such notification has been terminated.

"(v) RECORDS.—A repackager shall keep records of the disposition of an illegitimate product for not less than 6 years after the conclusion of the disposition.

"(C) REQUESTS FOR VERIFICATION.—Beginning 5 years after the date of enactment of the Drug Supply Chain Security Act, upon receiving a request for verification from an authorized manufacturer, wholesale distributor, or dispenser that is in possession or control of a product they believe to be repackaged by such repackager, a repackager shall, not later than 24 hours after receiving the verification request or in other such reasonable time as determined by the Secretary, based on the circumstances of the request, notify the person making the request whether the product identifier, including the standardized numerical identifier, that is the subject of the request corresponds to the product identifier affixed or imprinted by the repackager. If a repackager responding to a verification request identifies a product identifier that does not correspond to that affixed or imprinted by the repackager, the repackager shall treat such product as suspect product and conduct an investigation as described in subparagraph (A). If the repackager

has reason to believe the product is an illegitimate product, the repackager shall advise the person making the request of such belief at the time such repackager responds to the verification request.

"(D) ELECTRONIC DATABASE.—A repackager may satisfy the requirements of paragraph (4) by developing a secure electronic database or utilizing a secure electronic database developed or operated by another entity. The owner of such database shall establish the requirements and processes to respond to requests and may provide for data access to other members of the pharmaceutical distribution supply chain, as appropriate. The development and operation of such a database shall not relieve a repackager of the requirement under subparagraph (C) to respond to a verification request submitted by means other than a secure electronic database.

"(E) VERIFICATION OF SALEABLE RETURNED PRODUCT.—Beginning 5 years after the date of enactment of the Drug Supply Chain Security Act, upon receipt of a returned product that the repackager intends to further distribute, before further distributing such product, the repackager shall verify the product identifier for each sealed homogeneous case of such product or, if such product is not in a sealed homogeneous case, verify the product identifier on each package.

"(f) DROP SHIPMENTS.—

"(1) IN GENERAL.—A wholesale distributor that does not physically handle or store product shall be exempt from the provisions of this section, except the notification requirements under clauses (ii), (iii), and (iv) of subsection (c)(4)(B), provided that the manufacturer, repackager, or other wholesale distributor that distributes the product to the dispenser by means of a drop shipment for such wholesale distributor includes on the transaction information and transaction history to the dispenser the contact information of such wholesale distributor and provides the transaction information, transaction history, and transaction statement directly to the dispenser.

"(2) CLARIFICATION.—For purposes of this subsection, providing administrative services, including processing of orders and payments, shall not by itself, be construed as being involved in the handling, distribution, or storage of a product.".

SEC. 203. ENHANCED DRUG DISTRIBUTION SECURITY.

Section 582, as added by section 202, is amended by adding at the end the following:

"(g) ENHANCED DRUG DISTRIBUTION SECURITY.—

"(1) IN GENERAL.—On the date that is 10 years after the date of enactment of the Drug Supply Chain Security Act, the following interoperable, electronic tracing of product at the package level requirements shall go into effect:

"(A) The transaction information and the transaction statements as required under this section shall be exchanged in a secure, interoperable, electronic manner in accordance with the standards established under the guidance issued pursuant to paragraphs (3) and (4) of subsection (h), including any revision of such guidance issued in accordance with paragraph (5) of such subsection.

"(B) The transaction information required under this section shall include the product identifier at the package level for each package included in the transaction.

"(C) Systems and processes for verification of product at the package level, including the standardized numerical identifier, shall be required in accordance with the standards established under the guidance issued pursuant to subsection (a)(2) and the guidances issued pursuant to paragraphs (2), (3), and (4) of subsection (h), including any revision of such guidances issued in accordance with paragraph (5) of such subsection, which may include the use of aggregation and inference as necessary.

"(D) The systems and processes necessary to promptly respond with the transaction information and transaction statement for a product upon a request by the Secretary (or other appropriate Federal or State official) in the event of a recall or for the purposes of investigating a suspect product or an illegitimate product shall be required.

"(E) The systems and processes necessary to promptly facilitate gathering the information necessary to produce the transaction information for each transaction going back to the manufacturer, as applicable, shall be required—

"(i) in the event of a request by the Secretary (or other appropriate Federal or State official), on account of a recall or for the purposes of investigating a suspect product or an illegitimate product; or

"(ii) in the event of a request by an authorized trading partner, in a secure manner that ensures the protection of confidential commercial information and trade secrets, for purposes of investigating a suspect product or assisting the Secretary (or other appropriate Federal or State official) with a request described in clause (i).

"(F) Each person accepting a saleable return shall have systems and processes in place to allow acceptance of such product and may accept saleable returns only if such person can associate the saleable return product with the transaction information and transaction statement associated with that product.

"(2) COMPLIANCE.—

"(A) INFORMATION MAINTENANCE AGREEMENT.—A dispenser may enter into a written agreement with a third party, including an authorized wholesale distributor, under which the third party shall confidentially maintain any information and statements required to be maintained under this section. If a dispenser enters into such an agreement, the dispenser shall maintain a copy of the written agreement and shall not be relieved of the obligations of the dispenser under this subsection.

"(B) ALTERNATIVE METHODS.—The Secretary, taking into consideration the assessment conducted under paragraph (3), shall provide for alternative methods of compliance with any of the requirements set forth in paragraph (1), including—

"(i) establishing timelines for compliance by small businesses (including small business dispensers with

25 or fewer full-time employees) with such requirements, in order to ensure that such requirements do not impose undue economic hardship for small businesses, including small business dispensers for whom the criteria set forth in the assessment under paragraph (3) is not met, if the Secretary determines that such requirements under paragraph (1) would result in undue economic hardship; and

"(ii) establishing a process by which a dispenser may request a waiver from any of the requirements set forth in paragraph (1) if the Secretary determines that such requirements would result in an undue economic hardship, which shall include a process for the biennial review and renewal of any such waiver.

"(3) ASSESSMENT.—

"(A) IN GENERAL.—Not later than the date that is 18 months after the Secretary issues the final guidance required under subsection (h), the Secretary shall enter into a contract with a private, independent consulting firm with expertise to conduct a technology and software assessment that looks at the feasibility of dispensers with 25 or fewer full-time employees conducting interoperable, electronic tracing of products at the package level. Such assessment shall be completed not later than 8½ years after the date of enactment of the Drug Supply Chain Security Act.

"(B) CONDITION.—As a condition of the award of the contract under subparagraph (A), the private, independent consulting firm shall agree to consult with dispensers with 25 or fewer full-time employees when conducting the assessment under such subparagraph.

"(C) CONTENT.—The assessment under subparagraph (A) shall assess whether—

"(i) the necessary software and hardware is readily accessible to such dispensers;

"(ii) the necessary software and hardware is prohibitively expensive to obtain, install, and maintain for such dispensers; and

"(iii) the necessary hardware and software can be integrated into business practices, such as interoperability with wholesale distributors, for such dispensers.

"(D) PUBLICATION.—The Secretary shall—

"(i) publish the statement of work for the assessment under subparagraph (A) for public comment prior to beginning the assessment;

"(ii) publish the final assessment for public comment not later than 30 calendar days after receiving such assessment; and

"(iii) hold a public meeting not later than 180 calendar days after receiving the final assessment at which public stakeholders may present their views on the assessment.

"(4) PROCEDURE.—Notwithstanding section 553 of title 5, United States Code, the Secretary, in promulgating any regulation pursuant to this section, shall—

"(A) provide appropriate flexibility by—

"(i) not requiring the adoption of specific business systems for the maintenance and transmission of data;

"(ii) prescribing alternative methods of compliance for any of the requirements set forth in paragraph (1) or set forth in regulations implementing such requirements, including—

"(I) timelines for small businesses to comply with the requirements set forth in the regulations in order to ensure that such requirements do not impose undue economic hardship for small businesses (including small business dispensers for whom the criteria set forth in the assessment under paragraph (3) is not met), if the Secretary determines that such requirements would result in undue economic hardship; and

"(II) the establishment of a process by which a dispenser may request a waiver from any of the requirements set forth in such regulations if the Secretary determines that such requirements would result in an undue economic hardship; and

"(iii) taking into consideration—

"(I) the results of pilot projects, including pilot projects pursuant to this section and private sector pilot projects, including those involving the use of aggregation and inference;

"(II) the public meetings held and related guidance documents issued under this section;

"(III) the public health benefits of any additional regulations in comparison to the cost of compliance with such requirements, including on entities of varying sizes and capabilities;

"(IV) the diversity of the pharmaceutical distribution supply chain by providing appropriate flexibility for each sector, including both large and small businesses; and

"(V) the assessment pursuant to paragraph (3) with respect to small business dispensers, including related public comment and the public meeting, and requirements under this section;

"(B) issue a notice of proposed rulemaking that includes a copy of the proposed regulation;

"(C) provide a period of not less than 60 days for comments on the proposed regulation; and

"(D) publish in the Federal Register the final regulation not less than 2 years prior to the effective date of the regulation.

"(h) GUIDANCE DOCUMENTS.—

"(1) IN GENERAL.—For the purposes of facilitating the successful and efficient adoption of secure, interoperable product tracing at the package level in order to enhance drug distribution security and further protect the public health, the Secretary shall issue the guidance documents as provided for in this subsection.

"(2) SUSPECT AND ILLEGITIMATE PRODUCT.—

"(A) IN GENERAL.—Not later than 180 days after the date of enactment of the Drug Supply Chain Security Act, the Secretary shall issue a guidance document to aid

trading partners in the identification of a suspect product and notification termination. Such guidance document shall—

"(i) identify specific scenarios that could significantly increase the risk of a suspect product entering the pharmaceutical distribution supply chain;

"(ii) provide recommendation on how trading partners may identify such product and make a determination on whether the product is a suspect product as soon as practicable; and

"(iii) set forth the process by which manufacturers, repackagers, wholesale distributors, and dispensers shall terminate notifications in consultation with the Secretary regarding illegitimate product pursuant to subsections (b)(4)(B), (c)(4)(B), (d)(4)(B), and (e)(4)(B).

"(B) REVISED GUIDANCE.—If the Secretary revises the guidance issued under subparagraph (A), the Secretary shall follow the procedure set forth in paragraph (5).

"(3) UNIT LEVEL TRACING.—

"(A) IN GENERAL.—In order to enhance drug distribution security at the package level, not later than 18 months after conducting a public meeting on the system attributes necessary to enable secure tracing of product at the package level, including allowing for the use of verification, inference, and aggregation, as necessary, the Secretary shall issue a final guidance document that outlines and makes recommendations with respect to the system attributes necessary to enable secure tracing at the package level as required under the requirements established under subsection (g). Such guidance document shall—

"(i) define the circumstances under which the sectors within the pharmaceutical distribution supply chain may, in the most efficient manner practicable, infer the contents of a case, pallet, tote, or other aggregate of individual packages or containers of product, from a product identifier associated with the case, pallet, tote, or other aggregate, without opening each case, pallet, tote, or other aggregate or otherwise individually scanning each package;

"(ii) identify methods and processes to enhance secure tracing of product at the package level, such as secure processes to facilitate the use of inference, enhanced verification activities, the use of aggregation and inference, processes that utilize the product identifiers to enhance tracing of product at the package level, including the standardized numerical identifier, or package security features; and

"(iii) ensure the protection of confidential commercial information and trade secrets.

"(B) PROCEDURE.—In issuing the guidance under subparagraph (A), and in revising such guidance, if applicable, the Secretary shall follow the procedure set forth in paragraph (5).

"(4) STANDARDS FOR INTEROPERABLE DATA EXCHANGE.—

"(A) IN GENERAL.—In order to enhance secure tracing of a product at the package level, the Secretary, not later than 18 months after conducting a public meeting on the

interoperable standards necessary to enhance the security of the pharmaceutical distribution supply chain, shall update the guidance issued pursuant to subsection (a)(2), as necessary and appropriate, and finalize such guidance document so that the guidance document—

"(i) identifies and makes recommendations with respect to the standards necessary for adoption in order to support the secure, interoperable electronic data exchange among the pharmaceutical distribution supply chain that comply with a form and format developed by a widely recognized international standards development organization;

"(ii) takes into consideration standards established pursuant to subsection (a)(2) and section 505D;

"(iii) facilitates the creation of a uniform process or methodology for product tracing; and

"(iv) ensures the protection of confidential commercial information and trade secrets.

"(B) PROCEDURE.—In issuing the guidance under subparagraph (A), and in revising such guidance, if applicable, the Secretary shall follow the procedure set forth in paragraph (5).

"(5) PROCEDURE.—In issuing or revising any guidance issued pursuant to this subsection or subsection (g), except the initial guidance issued under paragraph (2)(A), the Secretary shall—

"(A) publish a notice in the Federal Register for a period not less than 30 days announcing that the draft or revised draft guidance is available;

"(B) post the draft guidance document on the Internet Web site of the Food and Drug Administration and make such draft guidance document available in hard copy;

"(C) provide an opportunity for comment and review and take into consideration any comments received;

"(D) revise the draft guidance, as appropriate;

"(E) publish a notice in the Federal Register for a period not less than 30 days announcing that the final guidance or final revised guidance is available;

"(F) post the final guidance document on the Internet Web site of the Food and Drug Administration and make such final guidance document available in hard copy; and

"(G) provide for an effective date of not earlier than 1 year after such guidance becomes final.

"(i) PUBLIC MEETINGS.—

"(1) IN GENERAL.—The Secretary shall hold not less than 5 public meetings to enhance the safety and security of the pharmaceutical distribution supply chain and provide for comment. The Secretary may hold the first such public meeting not earlier than 1 year after the date of enactment of the Drug Supply Chain Security Act. In carrying out the public meetings described in this paragraph, the Secretary shall—

"(A) prioritize topics necessary to inform the issuance of the guidance described in paragraphs (3) and (4) of subsection (h); and

"(B) take all measures reasonable and practicable to ensure the protection of confidential commercial information and trade secrets.

"(2) CONTENT.—Each of the following topics shall be addressed in at least one of the public meetings described in paragraph (1):

"(A) An assessment of the steps taken under subsections (b) through (e) to build capacity for a unit-level system, including the impact of the requirements of such subsections on—

"(i) the ability of the health care system collectively to maintain patient access to medicines;

"(ii) the scalability of such requirements, including as it relates to product lines; and

"(iii) the capability of different sectors and subsectors, including both large and small businesses, to affix and utilize the product identifier.

"(B) The system attributes necessary to support the requirements set forth under subsection (g), including the standards necessary for adoption in order to support the secure, interoperable electronic data exchange among sectors within the pharmaceutical distribution supply chain.

"(C) Best practices in each of the different sectors within the pharmaceutical distribution supply chain to implement the requirements of this section.

"(D) The costs and benefits of the implementation of this section, including the impact on each pharmaceutical distribution supply chain sector and on public health.

"(E) Whether electronic tracing requirements, including tracing of product at the package level, are feasible, cost effective, and needed to protect the public health.

"(F) The systems and processes needed to utilize the product identifiers to enhance tracing of product at the package level, including allowing for verification, aggregation, and inference, as necessary.

"(G) The technical capabilities and legal authorities, if any, needed to establish an interoperable, electronic system that provides for tracing of product at the package level.

"(H) The impact that such additional requirements would have on patient safety, the drug supply, cost and regulatory burden, and timely patient access to prescription drugs.

"(I) Other topics, as determined appropriate by the Secretary.

"(j) PILOT PROJECTS.—

"(1) IN GENERAL.—The Secretary shall establish 1 or more pilot projects, in coordination with authorized manufacturers, repackagers, wholesale distributors, and dispensers, to explore and evaluate methods to enhance the safety and security of the pharmaceutical distribution supply chain. Such projects shall build upon efforts, in existence as of the date of enactment of the Drug Supply Chain Security Act, to enhance the safety and security of the pharmaceutical distribution supply chain, take into consideration any pilot projects conducted prior to such date of enactment, including any pilot projects that use aggregation and inference, and inform the draft and final guidance under paragraphs (3) and (4) of subsection (h).

"(2) CONTENT.—

"(A) IN GENERAL.—The Secretary shall ensure that the pilot projects under paragraph (1) reflect the diversity of the pharmaceutical distribution supply chain and that the pilot projects, when taken as a whole, include participants representative of every sector, including both large and small businesses.

"(B) PROJECT DESIGN.—The pilot projects under paragraph (1) shall be designed to—

"(i) utilize the product identifier for tracing of a product, which may include verification of the product identifier of a product, including the use of aggregation and inference;

"(ii) improve the technical capabilities of each sector and subsector to comply with systems and processes needed to utilize the product identifiers to enhance tracing of a product;

"(iii) identify system attributes that are necessary to implement the requirements established under this section; and

"(iv) complete other activities as determined by the Secretary.

"(k) SUNSET.—The following requirements shall have no force or effect beginning on the date that is 10 years after the date of enactment of the Drug Supply Chain Security Act:

"(1) The provision and receipt of transaction history under this section.

"(2) The requirements set forth for returns under subsections (b)(4)(E), (c)(1)(B)(i), (d)(1)(C)(i), and (e)(4)(E).

"(3) The requirements set forth under subparagraphs (A)(v)(II) and (D) of subsection (c)(1), as applied to lot level information only.

"(l) RULE OF CONSTRUCTION.—The requirements set forth in subsections (g)(4), (i), and (j) shall not be construed as a condition, prohibition, or precedent for precluding or delaying the provisions becoming effective pursuant to subsection (g).

"(m) REQUESTS FOR INFORMATION.—On the date that is 10 years after the date of enactment of the Drug Supply Chain Security Act, the timeline for responses to requests for information from the Secretary, or other appropriate Federal or State official, as applicable, under subsections (b)(1)(B), (c)(1)(C), and (e)(1)(C) shall be not later than 24 hours after receiving the request from the Secretary or other appropriate Federal or State official, as applicable, or in such other reasonable time as determined by the Secretary based on the circumstances of the request.".

SEC. 204. NATIONAL STANDARDS FOR PRESCRIPTION DRUG WHOLESALE DISTRIBUTORS.

(a) AMENDMENTS.—

(1) REQUIREMENT.—Section 503(e) (21 U.S.C. 353(e)) is amended by striking paragraphs (1), (2), and (3) and inserting the following:

"(1) REQUIREMENT.—Subject to section 583:

"(A) IN GENERAL.—No person may engage in wholesale distribution of a drug subject to subsection (b)(1) in any State unless such person—

"(i)(I) is licensed by the State from which the drug is distributed; or

"(II) if the State from which the drug is distributed has not established a licensure requirement, is licensed by the Secretary; and

"(ii) if the drug is distributed interstate, is licensed by the State into which the drug is distributed if the State into which the drug is distributed requires the licensure of a person that distributes drugs into the State.

"(B) STANDARDS.—Each Federal and State license described in subparagraph (A) shall meet the standards, terms, and conditions established by the Secretary under section 583.

"(2) REPORTING AND DATABASE.—

"(A) REPORTING.—Beginning January 1, 2015, any person who owns or operates an establishment that engages in wholesale distribution shall—

"(i) report to the Secretary, on an annual basis pursuant to a schedule determined by the Secretary—

"(I) each State by which the person is licensed and the appropriate identification number of each such license; and

"(II) the name, address, and contact information of each facility at which, and all trade names under which, the person conducts business; and

"(ii) report to the Secretary within a reasonable period of time and in a reasonable manner, as determined by the Secretary, any significant disciplinary actions, such as the revocation or suspension of a wholesale distributor license, taken by a State or the Federal Government during the reporting period against the wholesale distributor.

"(B) DATABASE.—Not later than January 1, 2015, the Secretary shall establish a database of authorized wholesale distributors. Such database shall—

"(i) identify each authorized wholesale distributor by name, contact information, and each State where such wholesale distributor is appropriately licensed to engage in wholesale distribution;

"(ii) be available to the public on the Internet Web site of the Food and Drug Administration; and

"(iii) be regularly updated on a schedule determined by the Secretary.

"(C) COORDINATION.—The Secretary shall establish a format and procedure for appropriate State officials to access the information provided pursuant to subparagraph (A) in a prompt and secure manner.

"(D) CONFIDENTIALITY.—Nothing in this paragraph shall be construed as authorizing the Secretary to disclose any information that is a trade secret or confidential information subject to section 552(b)(4) of title 5, United States Code, or section 1905 of title 18, United States Code.

"(3) COSTS.—

"(A) AUTHORIZED FEES OF SECRETARY.—If a State does not establish a licensing program for persons engaged in the wholesale distribution of a drug subject to subsection

(b), the Secretary shall license a person engaged in wholesale distribution located in such State and may collect a reasonable fee in such amount necessary to reimburse the Secretary for costs associated with establishing and administering the licensure program and conducting periodic inspections under this section. The Secretary shall adjust fee rates as needed on an annual basis to generate only the amount of revenue needed to perform this service. Fees authorized under this paragraph shall be collected and available for obligation only to the extent and in the amount provided in advance in appropriations Acts. Such fees are authorized to remain available until expended. Such sums as may be necessary may be transferred from the Food and Drug Administration salaries and expenses appropriation account without fiscal year limitation to such appropriation account for salaries and expenses with such fiscal year limitation.

"(B) STATE LICENSING FEES.—Nothing in this Act shall prohibit States from collecting fees from wholesale distributors in connection with State licensing of such distributors.".

(2) WHOLESALE DISTRIBUTION.—Section 503(e) (21 U.S.C. 353(e)), as amended by paragraph (1), is further amended by adding at the end the following:

"(4) For the purposes of this subsection and subsection (d), the term 'wholesale distribution' means the distribution of a drug subject to subsection (b) to a person other than a consumer or patient, or receipt of a drug subject to subsection (b) by a person other than the consumer or patient, but does not include—

"(A) intracompany distribution of any drug between members of an affiliate or within a manufacturer;

"(B) the distribution of a drug, or an offer to distribute a drug among hospitals or other health care entities which are under common control;

"(C) the distribution of a drug or an offer to distribute a drug for emergency medical reasons, including a public health emergency declaration pursuant to section 319 of the Public Health Service Act, except that, for purposes of this paragraph, a drug shortage not caused by a public health emergency shall not constitute an emergency medical reason;

"(D) the dispensing of a drug pursuant to a prescription executed in accordance with subsection (b)(1);

"(E) the distribution of minimal quantities of drug by a licensed retail pharmacy to a licensed practitioner for office use;

"(F) the distribution of a drug or an offer to distribute a drug by a charitable organization to a nonprofit affiliate of the organization to the extent otherwise permitted by law;

"(G) the purchase or other acquisition by a dispenser, hospital, or other health care entity of a drug for use by such dispenser, hospital, or other health care entity;

"(H) the distribution of a drug by the manufacturer of such drug;

"(I) the receipt or transfer of a drug by an authorized third-party logistics provider provided that such third-party logistics provider does not take ownership of the drug;

"(J) a common carrier that transports a drug, provided that the common carrier does not take ownership of the drug;

"(K) the distribution of a drug, or an offer to distribute a drug by an authorized repackager that has taken ownership or possession of the drug and repacks it in accordance with section 582(e);

"(L) salable drug returns when conducted by a dispenser;

"(M) the distribution of a collection of finished medical devices, which may include a product or biological product, assembled in kit form strictly for the convenience of the purchaser or user (referred to in this subparagraph as a 'medical convenience kit') if—

"(i) the medical convenience kit is assembled in an establishment that is registered with the Food and Drug Administration as a device manufacturer in accordance with section 510(b)(2);

"(ii) the medical convenience kit does not contain a controlled substance that appears in a schedule contained in the Comprehensive Drug Abuse Prevention and Control Act of 1970;

"(iii) in the case of a medical convenience kit that includes a product, the person that manufacturers the kit—

"(I) purchased such product directly from the pharmaceutical manufacturer or from a wholesale distributor that purchased the product directly from the pharmaceutical manufacturer; and

"(II) does not alter the primary container or label of the product as purchased from the manufacturer or wholesale distributor; and

"(iv) in the case of a medical convenience kit that includes a product, the product is—

"(I) an intravenous solution intended for the replenishment of fluids and electrolytes;

"(II) a product intended to maintain the equilibrium of water and minerals in the body;

"(III) a product intended for irrigation or reconstitution;

"(IV) an anesthetic;

"(V) an anticoagulant;

"(VI) a vasopressor; or

"(VII) a sympathomimetic;

"(N) the distribution of an intravenous drug that, by its formulation, is intended for the replenishment of fluids and electrolytes (such as sodium, chloride, and potassium) or calories (such as dextrose and amino acids);

"(O) the distribution of an intravenous drug used to maintain the equilibrium of water and minerals in the body, such as dialysis solutions;

"(P) the distribution of a drug that is intended for irrigation, or sterile water, whether intended for such purposes or for injection;

"(Q) the distribution of medical gas, as defined in section 575;

"(R) facilitating the distribution of a product by providing solely administrative services, including processing of orders and payments; or

"(S) the transfer of a product by a hospital or other health care entity, or by a wholesale distributor or manufacturer operating at the direction of the hospital or other health care entity, to a repackager described in section 581(16)(B) and registered under section 510 for the purpose of repackaging the drug for use by that hospital, or other health care entity and other health care entities that are under common control, if ownership of the drug remains with the hospital or other health care entity at all times.".

(3) THIRD-PARTY LOGISTICS PROVIDERS.—Section 503(e) (21 U.S.C. 353(e)), as amended by paragraph (2), is further amended by adding at the end the following:

"(5) THIRD-PARTY LOGISTICS PROVIDERS.—Notwithstanding paragraphs (1) through (4), each entity that meets the definition of a third-party logistics provider under section 581(22) shall obtain a license as a third-party logistics provider as described in section 584(a) and is not required to obtain a license as a wholesale distributor if the entity never assumes an ownership interest in the product it handles.".

(4) AFFILIATE.—Section 503(e) (21 U.S.C. 353(e)), as amended by paragraph (3), is further amended by adding at the end the following:

"(6) AFFILIATE.—For purposes of this subsection, the term 'affiliate' means a business entity that has a relationship with a second business entity if, directly or indirectly—

"(A) one business entity controls, or has the power to control, the other business entity; or

"(B) a third party controls, or has the power to control, both of the business entities.".

(5) STANDARDS.—Subchapter H of chapter V, as added by section 202, is amended by adding at the end the following:

"SEC. 583. NATIONAL STANDARDS FOR PRESCRIPTION DRUG WHOLESALE DISTRIBUTORS.

"(a) IN GENERAL.—The Secretary shall, not later than 2 years after the date of enactment of the Drug Supply Chain Security Act, establish by regulation standards for the licensing of persons under section 503(e)(1) (as amended by the Drug Supply Chain Security Act), including the revocation, reissuance, and renewal of such license.

"(b) CONTENT.—For the purpose of ensuring uniformity with respect to standards set forth in this section, the standards established under subsection (a) shall apply to all State and Federal licenses described under section 503(e)(1) (as amended by the Drug Supply Chain Security Act) and shall include standards for the following:

"(1) The storage and handling of prescription drugs, including facility requirements.

"(2) The establishment and maintenance of records of the distributions of such drugs.

"(3) The furnishing of a bond or other equivalent means of security, as follows:

"(A)(i) For the issuance or renewal of a wholesale distributor license, an applicant that is not a government owned and operated wholesale distributor shall submit a surety bond of $100,000 or other equivalent means of security acceptable to the State.

"(ii) For purposes of clause (i), the State or other applicable authority may accept a surety bond in the amount of $25,000 if the annual gross receipts of the previous tax year for the wholesaler is $10,000,000 or less.

"(B) If a wholesale distributor can provide evidence that it possesses the required bond in a State, the requirement for a bond in another State shall be waived.

"(4) Mandatory background checks and fingerprinting of facility managers or designated representatives.

"(5) The establishment and implementation of qualifications for key personnel.

"(6) The mandatory physical inspection of any facility to be used in wholesale distribution within a reasonable time frame from the initial application of the facility and to be conducted by the licensing authority or by the State, consistent with subsection (c).

"(7) In accordance with subsection (d), the prohibition of certain persons from receiving or maintaining licensure for wholesale distribution.

"(c) INSPECTIONS.—To satisfy the inspection requirement under subsection (b)(6), the Federal or State licensing authority may conduct the inspection or may accept an inspection by the State in which the facility is located, or by a third-party accreditation or inspection service approved by the Secretary or the State licensing such wholesale distributor.

"(d) PROHIBITED PERSONS.—The standards established under subsection (a) shall include requirements to prohibit a person from receiving or maintaining licensure for wholesale distribution if the person—

"(1) has been convicted of any felony for conduct relating to wholesale distribution, any felony violation of subsection (i) or (k) of section 301, or any felony violation of section 1365 of title 18, United States Code, relating to product tampering; or

"(2) has engaged in a pattern of violating the requirements of this section, or State requirements for licensure, that presents a threat of serious adverse health consequences or death to humans.

"(e) REQUIREMENTS.—The Secretary, in promulgating any regulation pursuant to this section, shall, notwithstanding section 553 of title 5, United States Code—

"(1) issue a notice of proposed rulemaking that includes a copy of the proposed regulation;

"(2) provide a period of not less than 60 days for comments on the proposed regulation; and

"(3) provide that the final regulation take effect on the date that is 2 years after the date such final regulation is published.".

(b) AUTHORIZED DISTRIBUTORS OF RECORD.—Section 503(d) (21 U.S.C. 353(d)) is amended by adding at the end the following:

"(4) In this subsection, the term 'authorized distributors of record' means those distributors with whom a manufacturer

has established an ongoing relationship to distribute such manufacturer's products.".

(c) EFFECTIVE DATE.—The amendments made by subsections (a) and (b) shall take effect on January 1, 2015.

SEC. 205. NATIONAL STANDARDS FOR THIRD-PARTY LOGISTICS PROVIDERS; UNIFORM NATIONAL POLICY.

Subchapter H of chapter V, as amended by section 204, is further amended by adding at the end the following:

"SEC. 584. NATIONAL STANDARDS FOR THIRD-PARTY LOGISTICS PROVIDERS.

"(a) REQUIREMENTS.—No third-party logistics provider in any State may conduct activities in any State unless each facility of such third-party logistics provider—

"(1)(A) is licensed by the State from which the drug is distributed by the third-party logistics provider, in accordance with the regulations promulgated under subsection (d); or

"(B) if the State from which the drug distributed by the third-party logistics provider has not established a licensure requirement, is licensed by the Secretary, in accordance with the regulations promulgated under subsection (d); and

"(2) if the drug is distributed interstate, is licensed by the State into which the drug is distributed by the third-party logistics provider if such State licenses third-party logistics providers that distribute drugs into the State and the third-party logistics provider is not licensed by the Secretary as described in paragraph (1)(B).

"(b) REPORTING.—Beginning 1 year after the date of enactment of the Drug Supply Chain Security Act, a facility of a third-party logistics provider shall report to the Secretary, on an annual basis pursuant to a schedule determined by the Secretary—

"(1) the State by which the facility is licensed and the appropriate identification number of such license; and

"(2) the name and address of the facility and all trade names under which such facility conducts business.

"(c) COSTS.—

"(1) AUTHORIZED FEES OF SECRETARY.—If a State does not establish a licensing program for a third-party logistics provider, the Secretary shall license the third-party logistics provider located in such State and may collect a reasonable fee in such amount necessary to reimburse the Secretary for costs associated with establishing and administering the licensure program and conducting periodic inspections under this section. The Secretary shall adjust fee rates as needed on an annual basis to generate only the amount of revenue needed to perform this service. Fees authorized under this paragraph shall be collected and available for obligation only to the extent and in the amount provided in advance in appropriations Acts. Such fees are authorized to remain available until expended. Such sums as may be necessary may be transferred from the Food and Drug Administration salaries and expenses appropriation account without fiscal year limitation to such appropriation account for salaries and expenses with such fiscal year limitation.

"(2) STATE LICENSING FEES.—

"(A) STATE ESTABLISHED PROGRAM.—Nothing in this Act shall prohibit a State that has established a program

to license a third-party logistics provider from collecting fees from a third-party logistics provider for such a license.

"(B) NO STATE ESTABLISHED PROGRAM.—A State that does not establish a program to license a third-party logistics provider in accordance with this section shall be prohibited from collecting a State licensing fee from a third-party logistics provider.

"(d) REGULATIONS.—

"(1) IN GENERAL.—Not later than 2 years after the date of enactment of the Drug Supply Chain Security Act, the Secretary shall issue regulations regarding the standards for licensing under subsection (a), including the revocation and reissuance of such license, to third-party logistics providers under this section.

"(2) CONTENT.—Such regulations shall—

"(A) establish a process by which a third-party accreditation program approved by the Secretary shall, upon request by a third-party logistics provider, issue a license to each third-party logistics provider that meets the requirements set forth in this section;

"(B) establish a process by which the Secretary shall issue a license to each third-party logistics provider that meets the requirements set forth in this section if the Secretary is not able to approve a third-party accreditation program because no such program meets the Secretary's requirements necessary for approval of such a third-party accreditation program;

"(C) require that the entity complies with storage practices, as determined by the Secretary for such facility, including—

"(i) maintaining access to warehouse space of suitable size to facilitate safe operations, including a suitable area to quarantine suspect product;

"(ii) maintaining adequate security; and

"(iii) having written policies and procedures to—

"(I) address receipt, security, storage, inventory, shipment, and distribution of a product;

"(II) identify, record, and report confirmed losses or thefts in the United States;

"(III) correct errors and inaccuracies in inventories;

"(IV) provide support for manufacturer recalls;

"(V) prepare for, protect against, and address any reasonably foreseeable crisis that affects security or operation at the facility, such as a strike, fire, or flood;

"(VI) ensure that any expired product is segregated from other products and returned to the manufacturer or repackager or destroyed;

"(VII) maintain the capability to trace the receipt and outbound distribution of a product, and supplies and records of inventory; and

"(VIII) quarantine or destroy a suspect product if directed to do so by the respective manufacturer, wholesale distributor, dispenser, or an authorized government agency;

"(D) provide for periodic inspection by the licensing authority, as determined by the Secretary, of such facility warehouse space to ensure compliance with this section;

"(E) prohibit a facility from having as a manager or designated representative anyone convicted of any felony violation of subsection (i) or (k) of section 301 or any violation of section 1365 of title 18, United States Code relating to product tampering;

"(F) provide for mandatory background checks of a facility manager or a designated representative of such manager;

"(G) require a third-party logistics provider to provide the applicable licensing authority, upon a request by such authority, a list of all product manufacturers, wholesale distributors, and dispensers for whom the third-party logistics provider provides services at such facility; and

"(H) include procedures under which any third-party logistics provider license—

"(i) expires on the date that is 3 years after issuance of the license; and

"(ii) may be renewed for additional 3-year periods.

"(3) PROCEDURE.—In promulgating the regulations under this subsection, the Secretary shall, notwithstanding section 553 of title 5, United States Code—

"(A) issue a notice of proposed rulemaking that includes a copy of the proposed regulation;

"(B) provide a period of not less than 60 days for comments on the proposed regulation; and

"(C) provide that the final regulation takes effect upon the expiration of 1 year after the date that such final regulation is issued.

"(e) VALIDITY.—A license issued under this section shall remain valid as long as such third-party logistics provider remains licensed consistent with this section. If the Secretary finds that the third-party accreditation program demonstrates that all applicable requirements for licensure under this section are met, the Secretary shall issue a license under this section to a third-party logistics provider receiving accreditation, pursuant to subsection (d)(2)(A).

"SEC. 585. UNIFORM NATIONAL POLICY.

"(a) PRODUCT TRACING AND OTHER REQUIREMENTS.—Beginning on the date of enactment of the Drug Supply Chain Security Act, no State or political subdivision of a State may establish or continue in effect any requirements for tracing products through the distribution system (including any requirements with respect to statements of distribution history, transaction history, transaction information, or transaction statement of a product as such product changes ownership in the supply chain, or verification, investigation, disposition, notification, or recordkeeping relating to such systems, including paper or electronic pedigree systems or for tracking and tracing drugs throughout the distribution system) which are inconsistent with, more stringent than, or in addition to, any requirements applicable under section 503(e) (as amended by such Act) or this subchapter (or regulations issued thereunder), or which are inconsistent with—

"(1) any waiver, exception, or exemption pursuant to section 581 or 582; or

"(2) any restrictions specified in section 582.

"(b) WHOLESALE DISTRIBUTOR AND THIRD-PARTY LOGISTICS PROVIDER STANDARDS.—

"(1) IN GENERAL.—Beginning on the date of enactment of the Drug Supply Chain Security Act, no State or political subdivision of a State may establish or continue any standards, requirements, or regulations with respect to wholesale prescription drug distributor or third-party logistics provider licensure that are inconsistent with, less stringent than, directly related to, or covered by the standards and requirements applicable under section 503(e) (as amended by such Act), in the case of a wholesale distributor, or section 584, in the case of a third-party logistics provider.

"(2) STATE REGULATION OF THIRD-PARTY LOGISTICS PROVIDERS.—No State shall regulate third-party logistics providers as wholesale distributors.

"(3) ADMINISTRATION FEES.—Notwithstanding paragraph (1), a State may administer fee collections for effectuating the wholesale drug distributor and third-party logistics provider licensure requirements under sections 503(e) (as amended by the Drug Supply Chain Security Act), 583, and 584.

"(4) ENFORCEMENT, SUSPENSION, AND REVOCATION.—Notwithstanding paragraph (1), a State—

"(A) may take administrative action, including fines, to enforce a requirement promulgated by the State in accordance with section 503(e) (as amended by the Drug Supply Chain Security Act) or this subchapter;

"(B) may provide for the suspension or revocation of licenses issued by the State for violations of the laws of such State;

"(C) upon conviction of violations of Federal, State, or local drug laws or regulations, may provide for fines, imprisonment, or civil penalties; and

"(D) may regulate activities of licensed entities in a manner that is consistent with product tracing requirements under section 582.

"(c) EXCEPTION.—Nothing in this section shall be construed to preempt State requirements related to the distribution of prescription drugs if such requirements are not related to product tracing as described in subsection (a) or wholesale distributor and third-party logistics provider licensure as described in subsection (b) applicable under section 503(e) (as amended by the Drug Supply Chain Security Act) or this subchapter (or regulations issued thereunder).".

SEC. 206. PENALTIES.

(a) PROHIBITED ACT.—Section 301(t) (21 U.S.C. 331(t)), is amended—

(1) by striking "or" after "the requirements of section 503(d),"; and

(2) by inserting ", failure to comply with the requirements under section 582, the failure to comply with the requirements under section 584, as applicable," after "in violation of section 503(e)".

(b) MISBRANDING.—Section 502 (21 U.S.C. 352), as amended by section 103, is further amended by adding at the end the following:

"(cc) If it is a drug and it fails to bear the product identifier as required by section 582.".

SEC. 207. CONFORMING AMENDMENT.

(a) IN GENERAL.—Section 303(b)(1)(D) (21 U.S.C. 333(b)(1)(D)) is amended by striking "503(e)(2)(A)" and inserting "503(e)(1)".

(b) EFFECTIVE DATE.—The amendment made by subsection (a) shall take effect on January 1, 2015.

SEC. 208. SAVINGS CLAUSE.

Except as provided in the amendments made by paragraphs (1), (2), and (3) of section 204(a) and by section 206(a), nothing in this title (including the amendments made by this title) shall be construed as altering any authority of the Secretary of Health and Human Services with respect to a drug subject to section 503(b)(1) of the Federal Food, Drug, and Cosmetic Act (21 U.S.C. 353(b)(1)) under any other provision of such Act or the Public Health Service Act (42 U.S.C. 201 et seq.).

Speaker of the House of Representatives.

Vice President of the United States and President of the Senate.

FOR CONSIDERATION By the Committee on Health Policy

588-00653A-14 20147008__

A bill to be entitled

An act relating to nonresident pharmacies; amending s. 465.0156, F.S.; conforming provisions to changes made by the act; deleting a requirement that the Board of Pharmacy refer regulatory issues affecting a nonresident pharmacy to the state where the pharmacy is located; creating s. 465.0158, F.S.; requiring registered nonresident pharmacies to obtain a permit in order to ship, mail, deliver, or dispense compounded sterile products into this state; requiring submission of an application and a nonrefundable fee; specifying requirements; requiring the Department of Health to inform permittees of any law or rule changes; authorizing the board to deny, revoke, or suspend a permit for certain actions; providing dates by which certain registered and unregistered nonresident pharmacies must obtain a permit; authorizing the Board of Pharmacy to adopt rules; amending s. 465.017, F.S.; authorizing the department to inspect registered nonresident pharmacies; requiring nonresident pharmacies to pay for the costs of such inspections; providing an effective date.

Be It Enacted by the Legislature of the State of Florida:

Section 1. Subsections (4) and (5) of section 465.0156, Florida Statutes, are amended to read:

465.0156 Registration of nonresident pharmacies.—

(4) The board may deny, revoke, or suspend registration of,

CODING: Words ~~stricken~~ are deletions; words <u>underlined</u> are additions.

30 or fine or reprimand, a nonresident pharmacy for failure to
31 comply with s. 465.025, s. 465.0158, or ~~with~~ any requirement of
32 this section in accordance with ~~the provisions of~~ this chapter.
33 (5) In addition to the prohibitions of subsection (4), the
34 board may deny, revoke, or suspend registration of, or fine or
35 reprimand, a nonresident pharmacy in accordance with ~~the~~
36 ~~provisions of~~ this chapter for conduct that ~~which~~ causes or
37 could cause serious bodily injury or serious psychological
38 injury to a human or animal in ~~resident of~~ this state ~~if the~~
39 ~~board has referred the matter to the regulatory or licensing~~
40 ~~agency in the state in which the pharmacy is located and the~~
41 ~~regulatory or licensing agency fails to investigate within 180~~
42 ~~days of the referral~~.
43 Section 2. Section 465.0158, Florida Statutes, is created
44 to read:
45 465.0158 Nonresident pharmacy compounded sterile products
46 permit.—A nonresident pharmacy registered under s. 465.0156 must
47 also hold a compounded sterile products permit issued under this
48 section in order to ship, mail, deliver, or dispense, in any
49 manner, a compounded sterile product into this state.
50 (1) Application for a permit shall be submitted on a form
51 furnished by the board, together with a nonrefundable permit fee
52 as provided under s. 465.022(14). The board may require such
53 information as it deems reasonably necessary to carry out the
54 purposes of this section, including information pertaining to
55 registration as an outsourcing facility with the Secretary of
56 the United States Department of Health and Human Services.
57 (2) As a condition of initial permitting and permit
58 renewal, the owners, officers, and prescription department

CODING: Words ~~stricken~~ are deletions; words underlined are additions.

59 manager or pharmacist in charge of the nonresident pharmacy must
60 attest in writing that they have read and understand the laws
61 and rules governing sterile compounding in this state and that
62 any compounded sterile product shipped, mailed, delivered, or
63 dispensed into this state will meet or exceed this state's
64 standards for sterile compounding.
65 (a) The department shall notify all compounded sterile
66 products permittees when state laws or rules affecting the
67 standards for sterile compounding in this state are adopted or
68 revised, along with the effective date of the law or rule.
69 (b) If the department fails to notify a permittee of a
70 change in state laws or rules, or the permittee does not receive
71 notification of applicable rules, the permittee remains legally
72 obligated to meet or exceed this state's standards with respect
73 to any compounded sterile product shipped, mailed, delivered, or
74 dispensed into this state. The board may provide an exception to
75 this requirement by rule if the sterile compounding laws and
76 rules of the state in which the nonresident pharmacy is located
77 directly conflict with a board rule for sterile compounding in
78 this state but provide a comparable standard of product safety
79 and integrity.
80 (3) A nonresident pharmacy may not ship, mail, deliver, or
81 dispense any compounded sterile product into this state which:
82 (a) Was compounded in violation of the laws and rules of
83 the state in which the nonresident pharmacy is located; and
84 (b) Does not meet or exceed this state's sterile
85 compounding standards as provided in subsection (2).
86 (4) To the extent feasible, biennial permit renewal shall
87 be timed to coincide with nonresident pharmacies' registration

CODING: Words ~~stricken~~ are deletions; words underlined are additions.

88 renewal under s. 465.0156.
89 (5) In accordance with this chapter, the board may deny,
90 revoke, or suspend the permit of, or fine or reprimand, a
91 nonresident pharmacy for:
92 (a) Failure to comply with the requirements of this
93 section; or
94 (b) Conduct that causes or could cause serious bodily
95 injury or serious psychological injury to a human or animal in
96 this state.
97 (6) A registered nonresident pharmacy that is currently
98 shipping, mailing, delivering, or dispensing compounded sterile
99 products into this state may continue to do so if such products
100 meet or exceed the standards for sterile compounding in this
101 state and the pharmacy is issued a nonresident pharmacy
102 compounded sterile products permit on or before January 31,
103 2015.
104 (7) A nonresident pharmacy seeking registration in this
105 state under s. 465.0156 on or after July 1, 2014, may not ship,
106 mail, deliver, or dispense a compounded sterile product into
107 this state until it has received the sterile compounded products
108 permit required under this section.
109 (8) The board shall adopt rules necessary to administer
110 this section.
111 Section 3. Section 465.017, Florida Statutes, is amended to
112 read:
113 465.017 Authority to inspect; disposal.—
114 (1) Duly authorized agents and employees of the department
115 may ~~shall have the power to~~ inspect in a lawful manner at all
116 reasonable hours any pharmacy, including a nonresident pharmacy

CODING: Words ~~stricken~~ are deletions; words underlined are additions.

117 registered under s. 465.0156, and any~~,~~ hospital, clinic,
118 wholesale establishment, manufacturer, physician's office, or
119 any other place in the state in which drugs and medical supplies
120 are manufactured, packed, packaged, made, stored, sold, offered
121 for sale, exposed for sale, or kept for sale for the purpose of:
122 (a) Determining if any provision ~~of the provisions~~ of this
123 chapter or any rule adopted ~~promulgated~~ under its authority is
124 being violated;
125 (b) Securing samples or specimens of any drug or medical
126 supply after paying or offering to pay for such sample or
127 specimen; or
128 (c) Securing such other evidence as may be needed for
129 prosecution under this chapter.
130 (2) The cost for inspecting a nonresident pharmacy shall be
131 reimbursed by the pharmacy. The cost to the pharmacy is limited
132 to the actual costs incurred by the department.
133 (3)~~(2)(a)~~ Except as permitted by this chapter~~,~~ and chapters
134 406, 409, 456, 499, and 893 or upon the written authorization of
135 the patient, records maintained in a pharmacy relating to the
136 filling of prescriptions and the dispensing of medicinal drugs
137 may ~~shall not~~ be furnished only ~~to any person other than~~ to the
138 patient for whom the drugs were dispensed, or her or his legal
139 representative, ~~or~~ to the department pursuant to existing law,
140 or if~~, in the event that~~ the patient is incapacitated or unable
141 to request such ~~said~~ records, her or his spouse ~~except upon the~~
142 ~~written authorization of such patient~~.
143 (a) Such records may be furnished in any civil or criminal
144 proceeding, upon the issuance of a subpoena from a court of
145 competent jurisdiction and proper notice to the patient or her

CODING: Words ~~stricken~~ are deletions; words underlined are additions.

146 or his legal representative by the party seeking such records.
147 (b) The board shall adopt rules establishing ~~to establish~~
148 practice guidelines for pharmacies to dispose of records
149 maintained in a pharmacy relating to the filling of
150 prescriptions and the dispensing of medicinal drugs. Such rules
151 must ~~shall~~ be consistent with the duty to preserve the
152 confidentiality of such records in accordance with applicable
153 state and federal law.
154 Section 4. This act shall take effect July 1, 2014.

CODING: Words ~~stricken~~ are deletions; words underlined are additions.